No. 14-1513

Title: Halo Electronics, Inc., Petitioner
v.
Pulse Electronics, Inc., et al.

Docketed: June 24, 2015

Lower Ct: United States Court of Appeals for the Federal Circuit

Case Nos.: (2013-1472, 2013-1656)

Decision Date: October 22, 2014

Rehearing Denied: March 23, 2015

Questions Presented

--Date--	----Proceedings and Orders----------
Jun 22 2015	Petition for a writ of certiorari filed. (Response due July 24, 2015)
Jul 16 2015	Order extending time to file response to petition to and including August 24, 2015.
Jul 24 2015	Motion for leave to file amici brief filed by Nokia Technologies OY and Nokia USA, INC.
Jul 24 2015	Motion for leave to file amici brief filed by Independent Inventor Groups.
Aug 24 2015	Brief of respondents Pulse Electronics, Inc., et al. in opposition filed.
Sep 3 2015	Reply of petitioner Halo Electronics, Inc. filed.
Sep 4 2015	Letter received from counsel respondent, amending Rule 29.6. corporate disclosure statement. (Distributed) VIDED
Sep 9 2015	DISTRIBUTED for Conference of September 28, 2015.
Oct 5 2015	DISTRIBUTED for Conference of October 9, 2015.
Oct 13 2015	DISTRIBUTED for Conference of October 16, 2015.
Oct 19 2015	Motion for leave to file amici brief filed by Nokia Technologies OY and Nokia USA, INC GRANTED.
Oct 19 2015	Motion for leave to file amici brief filed by Independent Inventor Groups GRANTED.
Oct 19 2015	Petition GRANTED limited to Question 1 presented by the petition. The petition for a writ of certiorari in No. 14-1520 is granted. The cases are consolidated and a total of one hour is allotted for oral argument.
Oct 21 2015	Consent to the filing of amicus curiae briefs, in support of either party or of neither party, received from counsel for the petitioner.
Nov 10 2015	Consent to the filing of amicus curiae briefs, in support of either party or of neither party, received from counsel for the respondents.
Nov 19 2015	The time to file the joint appendix and petitioners' briefs on the merits is extended to and including December 9, 2015. VIDED
Nov 19 2015	The time to file respondents' briefs on the merits is extended to and including January 13, 2016. VIDED
Dec 9 2015	Joint appendix filed (2 Volumes). (Statement of costs filed)
Dec 9 2015	Brief of petitioner Halo Electronics, Inc. filed.
Dec 14 2015	Brief amici curiae of Mentor Graphics Corp., et al. in support of neither party filed. VIDED.

Dec 15 2015	Brief amici curiae of Public Knowledge, The Electronic Frontier Foundation, and Engine Advocacy in support of neither party filed. VIDED.
Dec 16 2015	Brief amicus curiae of the United States filed. VIDED.
Dec 16 2015	Brief amici curiae of Small Inventors filed. VIDED.
Dec 16 2015	Brief amicus curiae of Askeladden LLC in support of neither party filed. VIDED.
Dec 16 2015	Brief amicus curiae of Intellectual Property Professors in support of neither party filed. VIDED.
Dec 16 2015	Brief amici curiae of Nokia Technologies Oy and Nokia USA Inc. filed. VIDED.
Dec 16 2015	Brief amicus curiae of Licensing Executives Society (U.S.A. and Canada), Inc. in support of neither party filed. VIDED.
Dec 16 2015	Brief amicus curiae of Innovention Toys, LLC filed. VIDED.
Dec 16 2015	Brief amicus curiae of Intellectual Property Owners Association in support of neither party filed. VIDED.
Dec 16 2015	Brief amicus curiae of American Intellectual Property Law Association in support of neither party filed. VIDED.
Dec 16 2015	Brief amicus curiae of Ericsson Inc. in support of neither party filed. VIDED.
Dec 16 2015	Brief amicus curiae of MyKey Technology, Inc. in support of neither party filed.
Dec 16 2015	Brief amicus curiae of Professor Mossoff in support of neither party filed. VIDED.
Dec 23 2015	SET FOR ARGUMENT ON Tuesday, February 23, 2016
Jan 4 2016	Record requested from the U.S.C.A. Federal Circuit.
Jan 12 2016	Record received from U.S.C.A. Federal Circuit is electronic and located on PACER with the exception of an Appendix, also electronic.
Jan 13 2016	Brief of respondents Pulse Electronics, Inc., et al. filed.
Jan 15 2016	CIRCULATED.
Jan 19 2016	Motion of the Solicitor General for leave to participate in oral argument as amicus curiae and for divided argument filed. VIDED.
Jan 20 2016	Joint motion for divided argument filed by respondents. VIDED.
Jan 20 2016	Brief amicus curiae of BSA I The Software Alliance filed. VIDED. (Distributed)
Jan 20 2016	Brief amici curiae of Intel Corp., et al. filed. VIDED. (Distributed)
Jan 20 2016	Brief amicus curiae of Marvell Semiconductor, Inc. filed. VIDED. (Distributed)
Jan 20 2016	Brief amicus curiae of Huawei Technologies Co., Ltd. filed. VIDED. (Distributed)
Jan 20 2016	Brief amici curiae of Dell, et al. filed. VIDED. (Distributed)
Jan 20 2016	Brief amici curiae of Yahoo! Inc. and Arthrex, Inc. filed. VIDED. (Distributed)
Jan 20 2016	Brief amici curiae of Certain Members of Congress filed. VIDED. (Distributed)
Jan 20 2016	Brief amicus curiae of EMC Corporation filed. VIDED. (Distributed)
Jan 20 2016	Brief amici curiae of Google Inc., et al. filed. VIDED. (Distributed)
Jan 20 2016	Brief amici curiae of Internet Companies filed. VIDED. (Distributed)
Jan 25 2016	Motion of the Solicitor General for leave to participate in oral argument as amicus curiae and for divided argument GRANTED. VIDED
Jan 25 2016	Joint motion for divided argument filed by respondents DENIED. VIDED
Feb 12 2016	Reply of petitioner Halo Electronics, Inc. filed. (Distributed)
Feb 23 2016	Argued. For petitioners: Jeffrey B. Wall, Washington, D. C.; and Roman Martinez, Assistant to the Solicitor General, Department of Justice, Washington, D. C. (for United States, as amicus curiae.) For respondents: Carter G. Phillips, Washington, D. C. VIDED

14-1513

Supreme Court, U.S.
FILED
JUN 22 2015
OFFICE OF THE CLERK

No. 14-

In the
Supreme Court of the United States

HALO ELECTRONICS, INC.,

Petitioner,

v.

PULSE ELECTRONICS, INC., PULSE ELECTRONICS CORPORATION,

Respondents.

On Petition for a Writ of Certiorari to the United States Court of Appeals for the Federal Circuit

PETITION FOR A WRIT OF CERTIORARI

CRAIG E. COUNTRYMAN
Counsel of Record
Fish & Richardson P.C.
12390 El Camino Real
San Diego, CA 92130
(858) 678-5070
countryman@fr.com

MICHAEL J. KANE
WILLIAM R. WOODFORD
JOHN A. DRAGSETH
Fish & Richardson P.C.
3200 RBC Plaza
60 South Sixth Street
Minneapolis, MN 55402
(612) 335-5070

Counsel for Petitioner

QUESTIONS PRESENTED

1. Whether the Federal Circuit erred by applying a rigid, two-part test for enhancing patent infringement damages under 35 U.S.C. § 284, that is the same as the rigid, two-part test this Court rejected last term in *Octane Fitness, LLC v. ICON Health & Fitness, Inc.*, 134 S. Ct. 1749 (2014) for imposing attorney fees under the similarly-worded 35 U.S.C. § 285.

2. Whether the Federal Circuit erred by holding that a U.S. defendant does not "sell" or "offer to sell" the patented invention "within the United States" under 35 U.S.C. § 271(a), even though it enters a requirements contract with a U.S. customer that they negotiate and execute in the U.S., that is governed by California law, that specifies the material terms, and that creates legally binding obligations.

RULES 14.1(b) AND 29.6 STATEMENT

All parties are identified in the caption of this petition. No publicly held corporation owns 10% or more of Halo Electronics, Inc.

TABLE OF CONTENTS

Page

QUESTIONS PRESENTED i
RULES 14.1(b) AND 29.6 STATEMENT ii
TABLE OF AUTHORITIES v
OPINIONS BELOW 1
JURISDICTION 1
CONSTITUTIONAL, STATUTORY, AND REGULATORY PROVISIONS INVOLVED 1
INTRODUCTION 2
STATEMENT OF THE CASE 4
I. Pulse Copied Halo's Invention and Ignored Halo's Letters About the Patents-in-Suit. 4
II. Pulse Exploited Halo's Patented Technology by Selling to U.S. Customers Like Cisco. 7
III. The Proceedings Below. 8
A. The District Court. 8
B. The Federal Circuit. 10
REASONS FOR GRANTING THE PETITION 14
I. This Court Should Review the Federal Circuit's Section 284 Jurisprudence. 14
A. Federal Circuit Precedent Conflicts with the Statutory Text and *Octane* 14
B. The Proper Interpretation of § 284 Warrants Review Because of Its Important Consequences 19
C. This Case is a Good Vehicle to Return Enhanced Damages to the Text of § 284. 22
II. The Federal Circuit's Interpretation of § 271(a) Warrants Review. 24

TABLE OF CONTENTS—continued

Page

A. The Federal Circuit Misinterpreted the "Sells" and "Offers to Sell" Provisions of § 271(a). 24

B. The Proper Interpretation of § 271(a) is an Important Question That Has Previously Attracted this Court's Attention. 31

C. This Case is a Good Vehicle to Resolve the Proper Interpretation of § 271(a). 33

CONCLUSION 34

APPENDIX A: Federal Circuit Panel Opinion 1a

APPENDIX B: District Court Post-Trial Opinion on Willfulness and Other Issues 32a

APPENDIX C: District Court Summary Judgment Order on § 271(a) and Other Issues 67a

APPENDIX D: Federal Circuit Denial of Rehearing *En Banc* 137a

TABLE OF AUTHORITIES

Page(s)

Cases

3D Sys., Inc. v. Aarotech Labs., Inc.,
160 F.3d 1373 (Fed. Cir. 1998) 30, 31

Aro Mfg. Co. v. Convertible Top Replacement Co.,
377 U.S. 476 (1964) 16

Bartlett Springs Co. v. Standard Box Co.,
16 Cal. App. 671 (1911) 25

Brawley v. United States,
96 U.S. 168 (1877) 25

Commil USA, LLC v. Cisco Sys., Inc.,
135 S. Ct. 1920 (2015) 22

Cybiotronics, Ltd. v. Golden Source Elecs., Ltd.,
130 F. Supp. 2d 1152 (C.D. Cal. 2001) 32

Day v. Woodworth,
54 U.S. 363 (1851) 16

Dowling v. United States,
473 U.S. 207 (1985) 16

FieldTurf, Inc. v. Sw. Recreational Indus., Inc.,
235 F. Supp. 2d 708 (E.D. Ky. 2002) 33

Global Traffic Techs., LLC v. Morgan,
__ F. App'x __, 2015 WL 3513416
(Fed. Cir. June 4, 2015) 18, 23

Highmark Inc. v. Allcare Health Mgmt. Sys., Inc.,
134 S. Ct. 1744 (2014) 10, 12

ION, Inc. v. Sercel, Inc.,
2010 WL 3768110 (E.D. Tex. Sept. 16, 2010) 32

Loughrin v. United States, 134 S. Ct. 2384 (2014) 28

MediaTek Inc. v. Freescale Semiconductor, Inc.,
2014 WL 580836 (N.D. Cal. Feb. 13, 2014) 32

Microsoft Corp. v. i4i Ltd. P'ship,
131 S. Ct. 2238 (2011) 22

Norfolk & W. Ry. Co. v. Sims,
191 U.S. 441 (1903) 24, 27, 28, 31

Octane Fitness, LLC v. ICON Health & Fitness, Inc.,
134 S. Ct. 1749 (2014) ..... *passim*

Prof'l Real Estate Inv'rs, Inc. v. Columbia Pictures Indus.,
508 U.S. 49 (1993) 11

Quality Tubing, Inc. v. Precision Tube Holdings Corp.,
75 F. Supp. 2d 613 (S.D. Tex. 1999) 32

Safeco Ins. Co. of Am. v. Burr,
127 S. Ct. 2201 (2007) 19

In re Seagate Tech., LLC,
497 F.3d 1360 (Fed. Cir. 2007) (en banc) ..... *passim*

Semiconductor Energy Lab. Co. v. Chi Mei Optoelectronics Corp.,
531 F. Supp. 2d 1084 (N.D. Cal. 2007) 32

Seymour v. McCormick,
57 U.S. 480 (1853) 16

Stryker Corp. v. Zimmer, Inc.,
596 F. App'x 924 (Fed. Cir. 2015) 23

Stryker Corp. v. Zimmer, Inc.,
782 F.3d 649 (Fed. Cir. 2015) 18

Teese v. Huntingdon,
64 U.S. 2 (1860) 15, 18

Tilghman v. Proctor,
125 U.S. 136 (1888) 15

Transocean Offshore Deepwater Drilling, Inc. v. Maersk Contractors USA, Inc.,
617 F.3d 1296 (Fed. Cir. 2010) ..... *passim*

United States v. Castleman,
134 S. Ct. 1405, 1410 (2014) 27

Wesley Jessen Corp. v. Bausch & Lomb, Inc.,
256 F Supp. 2d 228 (D. Del. 2003) 32

Wing Shing Prods. (BVI), Ltd. v. Simatelex Manufactory Co.,
479 F Supp. 2d 388 (S.D.N.Y. 2007) 32

U.S. Constitution and Statutes

U.S. CONST. Art. I, § 8, cl. 8 19

35 U.S.C. § 103 20

35 U.S.C § 271 ..... *passim*

35 U.S.C. § 282 21

35 U.S.C. § 284 ..... *passim*

35 U.S.C. § 285 ..... *passim*

Patent Act of 1836, ch. 357, 5 Stat. 117 (1836) 15

Patent Act of 1870, ch. 230, § 59, 16 Stat. 198, 207 (1870) 15

UNIFORM COMMERCIAL CODE § 2-306 (West 1963) 26

Regulations

48 C.F.R. § 16.503 26

Legislation History

S. Rep. No. 79-1503, at 2 (1946) 19, 21

Other Authorities

AIPLA 2013 Report of the Economic Survey, *available at* http://bit.ly/1yF9L9h 21

BLACK'S LAW DICTIONARY (7th Ed. 1999) 25

ANDREA LUNSFORD & ROBERT CONNORS, THE ST. MARTINS HANDBOOK (3d ed. 1995) 30

Anthony Breitzman & Diana Hicks, ANALYSIS OF SMALL BUSINESS PATENTS BY INDUSTRY AND FIRM SIZE (Nov. 2008), *available at* http://bit.ly/1LoJZwL 21

1 A. CORBIN, CONTRACTS (1963) 25

HENRY J. FRIENDLY, FEDERAL JURISDICTION: A GENERAL VIEW (1973) 20

1 S. WILLISTON, LAW OF CONTRACTS (3d ed. 1957) 26

PETITION FOR A WRIT OF CERTIORARI

Halo Electronics, Inc. respectfully petitions for a writ of *certiorari* to review the judgment below.

OPINIONS BELOW

The court of appeals affirmed the judgment, (App., *infra*, 1a-31a), as reported at 769 F.3d 1371 (Fed. Cir. 2014), and denied rehearing *en banc* (App., *infra*, 137a-154a), as reported at 780 F.3d 1357 (Fed. Cir. 2015). The district court's opinions, (App. 32a-136a), are reported at 810 F. Supp. 2d 1173 (D. Nev. 2011) and 2013 WL 2319145 (D. Nev. May 28, 2013).

JURISDICTION

The Federal Circuit denied rehearing on March 23, 2015. This Court has jurisdiction under 28 U.S.C. § 1254(1).

CONSTITUTIONAL, STATUTORY, AND REGULATORY PROVISIONS INVOLVED

35 U.S.C. § 284 provides in relevant part:

> Upon finding for the claimant the court shall award the claimant damages adequate to compensate for the infringement. . . . [T]he court may increase the damages up to three times the amount found or assessed.

35 U.S.C § 271(a) provides in relevant part:

> Except as otherwise provided in this title, whoever without authority makes, uses, offers to sell, or sells any patented invention, within the United States or imports into the United States any patented invention during the term of the patent therefor, infringes the patent.

INTRODUCTION

This patent case presents two issues for which the Federal Circuit has, once again, adopted a rigid rule that conflicts with the statutory text.

The first issue involves enhanced damages under 35 U.S.C. § 284, a provision that parallels the one for attorney fees under 35 U.S.C. § 285. Both provisions are general and flexible, simply saying, respectively, that a court "may increase damages," or "may award reasonable attorney fees to the prevailing party" in "exceptional cases." Until last year, when this Court decided *Octane Fitness, LLC v. ICON Health & Fitness, Inc.*, 134 S. Ct. 1749 (2014), the Federal Circuit applied the same rigid two-part test to both provisions, which required that a party (i) had no objectively reasonable basis for its position and (ii) acted in subjective bad faith. Despite this Court rejecting that rigid test for § 285 in *Octane* (calling the Federal Circuit test an "inflexible framework" for "inherently flexible" statutory text), the Federal Circuit in this case refused to adjust its § 284 law accordingly. Two judges recognized the problem and urged *en banc* rehearing to align with *Octane*. But the full Federal Circuit refused. As a result, district courts are now unable to impose enhanced damages if a defendant presents a non-frivolous defense, even if it acted in bad faith before the suit by copying the patentee's product, ignoring offers to license, and failing to investigate or develop any pre-suit defense. Nothing in the statutory text justifies this ridiculous result, and *Octane* suggests just the opposite.

The second issue involves 35 U.S.C. § 271(a), which makes liable for infringement a defendant who "offers to sell, or sells any patented invention, within the United States." The term "sells" has a well-

established common law meaning that includes forming a contract that sets material terms, *i.e.*, price and quantity. Yet the Federal Circuit held that a requirements contract that specifies part numbers and prices, allocates a percentage of the future demand between the U.S. defendant (Pulse) and its U.S. customer (Cisco), is negotiated and executed in the United States, and is governed by California law, is not an infringing sale under § 271(a). The Federal Circuit thought these contracts "did not constitute a firm agreement to buy and sell, binding on both Cisco and Pulse," (App. 15a), even though requirements contracts have been enforceable for over a century.

The Federal Circuit compounded its error by finding no "*offer* to sell ... within the United States" either, even though the defendant's U.S. employee made offers to its customer's U.S. employee that the defendant's President admitted it would be bound to honor. Applying *Transocean Offshore Deepwater Drilling, Inc. v. Maersk Contractors USA, Inc.*, 617 F.3d 1296, 1309 (Fed. Cir. 2010), the Federal Circuit erroneously determined that not only must the offer be in the U.S., but that delivery must be too.

Transocean runs contrary to the statutory text, which requires only an "offer" in the U.S. It will also have a devastating impact on U.S. patentees by allowing infringers to conduct sales activities in the U.S. but avoid liability through creative contracting. This Court came close to reviewing *Transocean* itself, asking for the Solicitor General's views on whether to grant *certiorari* there, only to have that case settle. This case is the perfect vehicle to take up the question. A group of professors who supported *certiorari* in *Transocean* correctly called the result here "perplexing." This Court's review is warranted.

STATEMENT OF THE CASE

I. Pulse Copied Halo's Invention and Ignored Halo's Letters About the Patents-in-Suit.

1. Halo is a family business with about 15 employees. (A1087-99 (all A__ cites are to the Court of Appeals appendix).) Halo's main products are small electrical components called surface mount transformers. (A1099-1103, A1439-42.) These transformers are affixed to printed circuit boards and incorporated into computers, routers, and many other consumer products. (*Id.*)

This suit concerns Halo's patents covering the unique "open construction" packaging of its transformers. The patented technology solved a problem that had plagued the industry. (A1121-23, A1460-68, A3376.) The packages of surface mount transformers would often crack and fail because of high temperatures during the process of soldering the transformers to a circuit board, which imposed enormous costs on customers. (*Id.*) Others had tried and failed for years to solve the problem before Halo. (*Id.*)

Halo began work in late 1993 and spent months perfecting its patented design. (A1307-28, A1125-37, A1868-72.) When Halo introduced the new product to customers, they were initially skeptical it would work. (A1150-52; A1956-57.) But the product's superior performance eventually overcame these worries, and, by 1997, Halo's annual sales of it increased to $5 million. (A7736; A1153-54.) Halo's customers for the patented products included Cisco, Motorola, Siemens, and GE. (A1103-04, A1942-43.)

2. Pulse, a company with about 10,000 employees, had been trying to solve the cracking problem for years before Halo's founding. Pulse introduced a va-

riety of designs starting in the mid-1980s that attempted to solve the problem, and it promoted them through at least August 1997, when Halo's first patent issued, publicly disclosing the Halo design to competitors. (A6035-42; A6043-48 at 1:57-2:3, Figs. 1 & 5; A6280-84 at 1:33-43, 3:35-36; A3377-78; A3391-92.) Pulse's publications from the early 1990s criticized a design element that would become crucial to Halo's patented solution and touted that Pulse had eliminated that element. (*Id.*) Yet Pulse's efforts failed. Its employees admitted that its old transformers "will crack during the reflow process" for soldering them to circuit boards, described this as a "typical failure," and believed that "this is a killer for us." (A6285-89.)

So Pulse copied Halo's invention. A Pulse engineer learned about Halo's design in 1998 when he saw Halo's first patent. (A2241, A2865-66.) That same year, Pulse introduced its first products with the exact construction disclosed in Halo's patents, with the very element it had been criticizing for years. (A2063.) Once Pulse adopted the Halo design, its sales of infringing products soon dwarfed Halo's, increasing to $16 million by 2002. (A7740.) Yet, during that time, Pulse never did anything to investigate its liability for infringement, even though others at Pulse, including lawyers and marketing employees, kept seeing Halo's patents. (A2241, A2865-68.)

Much-smaller Halo had a difficult time trying to enforce its patents. It sent Pulse two mid-2002 invitations to negotiate a license. (A5953; A5954.) Pulse never responded. Yet, despite ignoring Halo, Pulse had no subjective belief that it had a defense—its corporate representative later admitted that "I'm not aware of anyone in the company that I know of that

made a conscious decision" on the issue. (A2245; A2864.) It appears that Pulse was counting on the fact that Halo couldn't afford to bring suit. And, for a time, Pulse was right—Halo's financial pressures (and the terminal illness of its President's wife) prevented it from filing this suit until 2007. (App. 60a.)

In the meantime, Pulse took full advantage. Pulse expanded its sales of infringing products to $39 million a year by 2007, and it never tried to avoid infringement. (A7740; A2033; A2433.) Things got worse after Halo sued. A 2008 Pulse email admitted it was now trying to design "all" new products using Halo's "open" construction. (A6185-87.) A 2009 Pulse marketing presentation went even further, explaining that not only would "all" new products use Halo's "open" construction, rather than Pulse's old, inferior design, but that the plan was to "convert" any old models still remaining to Halo's "open" construction to comply with new industry standards for lead-free products that required even higher temperatures during the soldering process. (A6151.)

When called to explain its actions at trial, Pulse pointed only to an engineer who said that he reviewed Halo's patents in 2002 and concluded they were invalid. (A2424-15.) But Pulse's corporate representative admitted this investigation was "cursory." (A2863-64.) And another Pulse engineer admitted that the prior products his colleague had relied upon were "irrelevant" to Halo's invention. (A3112; A2409.) Even worse, the Pulse engineer who supposedly reviewed Halo's patents was unfamiliar with the relevant law and did not rely on legal advice from anyone else in analyzing validity. (A2424-27, A2411.) Not surprisingly, no decision-maker in the company actually relied on his analysis. (A2864.)

II. Pulse Exploited Halo's Patented Technology by Selling to U.S. Customers Like Cisco.

Pulse has taken sales from Halo at a number of their common U.S. customers, especially Cisco. (A2150-51.) We provide some background on these transactions, using Cisco as a representative example, to show the offers and sales occurred in the U.S.

Pulse sells transformers to Cisco that are incorporated into Cisco's end-products (e.g., routers and other computer networking equipment). Cisco will not buy a Pulse transformer until it first pre-approves the part for use. (A15092-94, A15003, A1947-49, A15083.) Pulse obtains that pre-approval by having its U.S. employees work with Cisco's U.S. engineers to ensure the product matches Cisco's size and electrical requirements and by sending samples to Cisco for testing. (*Id.*)

Pulse's negotiates and executes its sales contracts with Cisco entirely in the United States. These U.S. contracts are formed quarterly and set a binding price for each part and a quantity as a percentage of Cisco's requirements. The quarterly negotiation process begins when a Cisco U.S. employee sends Pulse a "Request for Quote" that solicits bids for all pre-approved Pulse products. (A15047-52; A15070; A15072-79.) A Pulse U.S. employee responds by offering to sell a minimum quantity of those parts to Cisco and stating a particular price. (*Id.*) Pulse's President admitted that this is a binding offer, testifying that "when we submit that price, we're agreeing, if Cisco orders that number of parts, we will give them that price." (A15443-44.) Cisco accepts the offer by responding with a final price for each part and percentage allocation for Pulse of Cisco's requirements for the quarter. (A15047-52;

A15096-97; A15098-124.) A master purchase agreement between Pulse and Cisco is governed by California law and sets further "binding" terms for "all purchases made by Cisco or on our behalf by our contract manufacturers," including terms on capacity, timing, and "lowest price warranties." (A15135; A15056-57.)

Though the offer for sale and sale occur wholly in the U.S., the delivery of the products occurs wholly outside the U.S. Cisco communicates the contract price and allocation to its manufacturers, who assemble Cisco's end products. (A15045-47, A15053; A15127.) Pulse sends the infringing products from its warehouses in Asia to Cisco's manufacturers (who are also in Asia), and the manufacturer pays Pulse. (A15127-29, A15138-49.) Cisco reimburses its manufacturer after receiving an invoice that includes the cost of all components used to build the Cisco end-product, including Pulse's products. (A15045, A15054; A15150-253; A15254-339; A15392-93.)

The price and quantity agreed upon by Pulse and Cisco through the master purchase agreement and quarterly contracts strictly controls the transaction. (*See, e.g.*, A15053-56, A15063-64, A15127, A15128-32, A15138-49, A15825, A15458, A15463, A15472, A15836.; A15189; A15293; A15388; A15576; A15085-88; A15991.) Cisco's manufacturers are not free to deviate from them, and Cisco has rebuked manufacturers who have tried to deviate. (A15130-32, A15449, A15055.)

III. The Proceedings Below.

A. The District Court.

1. Halo brought this suit in March 2007 to stop Pulse's infringement of U.S. Patents 5,656,985;

6,297,720; and 6,344,785. Halo alleged that Pulse infringed under 35 U.S.C. § 271(a) by (i) shipping patented products into the U.S. and (ii) offering to sell and selling products to Cisco and other U.S. customers with the U.S. contracts described above. Halo also alleged that Pulse induced infringement under 35 U.S.C. § 271(b) by encouraging non-U.S. customers to import end products containing Pulse's infringing products into the U.S. Halo further alleged that Pulse's infringement was willful and sought enhanced damages under 35 U.S.C. § 284. (A294-95.)

Before trial, the district court granted summary judgment that Pulse's sales to Cisco did not infringe under § 271(a). The court reasoned that, "[a]lthough Halo has presented evidence indicating that pricing discussions took place between Pulse and its customers in the United States," the products were not "shipped" into the United States. (App. 129a-130a.) It also granted summary judgment, without explanation, that there was no offer for sale to Cisco in the U.S. (*Id.*) The district court's judgment excluded the vast majority of Pulse's U.S. sales from trial.

2. The parties went to trial on Halo's claim of infringement under § 271(a) for products Pulse shipped into the United States and inducement under § 271(b). The jury sided with Halo, finding the patents valid and infringed, and awarded $1.5 million.

The jury also found by clear and convincing evidence that Pulse's infringement was willful. (A233.) The instructions told the jury that, to find willfulness, it would have to conclude that "Pulse acted with reckless disregard" of Halo's patents, *i.e.*, "that Pulse actually knew, or it was so obvious that Pulse should have known, that Pulse's actions constituted infringement of a valid patent." (A210.) The jury

was also told to consider "whether Pulse acted in a manner consistent with the standards of commerce for its industry." (*Id.*) The jury thus found that Pulse acted in bad faith and inconsistently with those standards of commerce.

Nevertheless, the district court set aside the willfulness finding after trial. Federal Circuit precedent permits a finding of willfulness only if the defendant (1) "acted despite an objectively high likelihood that its actions constituted infringement of a valid patent," and (2) "this objectively-defined risk (determined by the record developed in the infringement proceeding) was either known or so obvious that it should have been known to the accused infringer." *In re Seagate Tech., LLC*, 497 F.3d 1360, 1371-72 (Fed. Cir. 2007) (en banc). The jury's finding, which Pulse never challenged in a Rule 50 motion, dealt with the second prong. The district court, however, concluded the first prong was not met because Pulse presented an invalidity defense at trial that "was not objectively baseless, or a sham." (App. 64a.)

B. The Federal Circuit.

1. A Federal Circuit panel affirmed the conclusion of no willful infringement, agreeing that the first prong of its *Seagate* test was not met because "Pulse did raise a substantial question as to the obviousness of the Halo patents." (App. 21a.)

Nevertheless, Judges O'Malley and Hughes issued a concurrence explaining that, although existing Federal Circuit precedent compelled that result, that precedent conflicted with this Court's intervening decisions in *Octane Fitness, LLC v. ICON Health & Fitness, Inc.*, 134 S. Ct. 1749 (2014) and *Highmark Inc. v. Allcare Health Mgmt. Sys., Inc.*, 134 S. Ct.

1744 (2014), and the text of the governing statutory provision, 35 U.S.C. § 284. (App. 25a-31a.)

They began by noting that the *Seagate* test for enhanced damages under 35 U.S.C. § 284 is "analogous" to the Federal Circuit's now-rejected test for attorney fees under § 285:

> Our current two-prong, objective/subjective test for willful infringement set out in [*Seagate*] is analogous to the test this court prescribed for the award of attorneys' fees under § 285 in *Brooks Furniture Manufacturing, Inc. v. Dutailier International, Inc.*, 393 F.3d 1378, 1381–82 (Fed. Cir. 2005), *overruled by Octane Fitness*, 134 S. Ct. at 1757–58. The parallel between our tests for these two issues is not surprising. Both enhanced damages and attorneys' fees are authorized under similar provisions in title 35 of the United States Code (the Patent Act of 1952).

(App. 26a.) The concurring judges added that both tests "were predicated on our interpretation of the Supreme Court's decision in *Professional Real Estate Investors, Inc. v. Columbia Pictures Industries. ("PRE")*, 508 U.S. 49 (1993), which we believed required a two-step objective subjective inquiry before either enhanced damages or attorneys' fees could be awarded." (App. 27a.)

The concurring judges then urged their colleagues to reconsider *en banc* their willfulness test because "[t]he Supreme Court has now told us that our reading of *PRE* was wrong." (App. 27a.) They explained that nothing in the text of the enhanced damages provision of § 284 supports application of the rigid, two-prong *PRE* test, just as this Court de-

termined in *Octane* that nothing in § 285 justified use of the two-prong test for attorney fees:

> Because we now know that we were reading *PRE* too broadly, and have been told to focus on the governing statutory authorization to determine what standards should govern an award of attorneys' fees, we should reconsider whether those same interpretative errors have led us astray in our application of the authority granted to district courts under § 284. Just as "the *PRE* standard finds no roots in the text of § 285," [*Octane*, 134 S. Ct. at 1757-58], there is nothing in the text of § 284 that justifies the use of the *PRE* narrow standard. In rejecting the rigid two-prong, subjective/objective test for § 285 under *Brooks Furniture*, the Supreme Court told us to employ a flexible totality of the circumstances test. *Id.* at 1756. We should now assess whether a similar flexible test is appropriate for an award of enhanced damages.

(App. 28a.) They also urged *en banc* reconsideration of several other aspects of willfulness jurisprudence in light of *Octane* and *Highmark*. (App. 28a-31a.)

Taking their suggestion, Halo sought rehearing *en banc*, but the Federal Circuit denied the request. (App. 138a-139a.) Two judges wrote separately to note that, although there were several questions surrounding § 284 that might someday warrant *en banc* review, they understood Halo's petition to be raising only a narrower issue that did not have the necessary "general importance." (App. 140a-145a.) But Halo's petition had implicated those questions, specifically noting that the panel's decision was inconsistent with the text of § 284, *Octane*, and *Highmark*.

Judges O'Malley and Hughes dissented. (App. 146a-154a.) They reiterated their prior points, and added that their court has "require[d] that an evidentiary wall be erected between the objective and subjective portions of the inquiry." (App. 148a.) This wall "preclude[s] considerations of subjective bad faith—no matter how egregious—from informing our inquiry," of the "objective" prong. (*Id.*)

2. The Federal Circuit also affirmed the summary judgment that Pulse's offers for sale and sales to Cisco and similar customers did not infringe under § 271(a). The panel concluded there was no "sale" within the United States because the requirements contracts between Pulse and Cisco setting price and allocation supposedly "did not constitute a firm agreement to buy and sell, binding on both Cisco and Pulse," (App. 15a), even though requirements contracts have been enforceable outside patent law for over a century. The panel thus declined to decide if a binding U.S. contract constitutes a "sale within the United States" under § 271(a). (App. 15a n.1.)

The panel then concluded that Pulse did not make any "offer for sale" to Cisco in the United States because, under circuit precedent, "the location of the contemplated sale controls whether there is an offer to sell *within the United States*." (App. 18a, *citing Transocean Offshore Deepwater Drilling, Inc. v. Maersk Contractors USA, Inc.*, 617 F.3d 1296, 1309 (Fed. Cir. 2010).) Because it had previously concluded that Pulse was not making U.S. sales to Cisco, the panel thought that Pulse's "offers for sale" to Cisco also were not in the U.S., even though a Pulse U.S. employee made the offers to a Cisco U.S. employee when both were in the U.S. (App. 18a-19a.)

REASONS FOR GRANTING THE PETITION

I. This Court Should Review the Federal Circuit's Section 284 Jurisprudence.

A. Federal Circuit Precedent Conflicts with the Statutory Text and *Octane*.

The Federal Circuit's enhanced damages jurisprudence conflicts with the statutory text, statutory purpose, and this Court's precedent. The statutory text says, without qualification, that "the court may increase the damages up to three times the amount found or assessed." 35 U.S.C. § 284. Yet, despite this broad language, the Federal Circuit has grafted a willfulness requirement onto the statute. *Seagate*, 497 F.3d at 1368 ("Absent a statutory guide, we have held that an award of enhanced damages requires a showing of willful infringement."). It has then stacked on an additional requirement not in the statute, *i.e.*, that willfulness can be proven only under the same rigid two-part objective/subject test that this Court rejected in *Octane* for the similarly flexible § 285. *Seagate*, 497 F.3d at 1371. As a result, the district court here had no discretion to enhance damages to punish Pulse's bad faith infringement simply because its trial lawyers presented a non-sham defense. This Court should grant review to eliminate the Federal Circuit's unsupported artifice.

1. The text of § 284 does not restrict district courts to enhancing damages only on a finding of "willful" infringement. The *Seagate* majority itself acknowledged the problem, noting that it was imposing the willfulness requirement "*absent a statutory guide*." *Seagate*, 497 F.3d at 1368. That was error. As two concurring judges explained, "the language of

the statute unambiguously omits any such requirement" and "there is no principled reason for continuing to engraft a willfulness requirement onto section 284." *Seagate*, 497 F.3d at 1377 (Gajarsa, J., concurring).

The Federal Circuit's approach conflicts not only with the statutory text, but also with this Court's precedent. Section 284 carried over analogous enhanced damages provisions of the Patent Acts of 1836 and 1870. *See* Patent Act of 1836, ch. 357, 5 Stat. 117 (1836) ("[I]t shall be in the power of the court to render judgment for any sum above the amount found by such verdict . . . not exceeding three times the amount thereof, according to the circumstances of the case"); Patent Act of 1870, ch. 230, § 59, 16 Stat. 198, 207 (1870) ("[T]he court may enter judgment thereon for any sum above the amount found by the verdict as the actual damages sustained, according to the circumstances of the case, not exceeding three times the amount of such verdict, together with the costs."). This Court understood those broadly worded predecessor provisions to give district courts wide latitude to enhance damages whenever the case appeared to require it:

- *Tilghman v. Proctor*, 125 U.S. 136, 143-44 (1888) ("[T]he court may, *whenever the circumstances of the case appear to require it*, inflict vindictive or punitive damages, by rendering judgment for not more than thrice the amount of the verdict.");
- *Teese v. Huntingdon*, 64 U.S. 2, 9 (1860) ("[I]f, in the opinion of the court, the defendant *has not acted in good faith, or has caused unnecessary expense and injury to the plaintiff*, the court may render judgment for a

larger sum, not exceeding three times the amount of the verdict.");

- *Seymour v. McCormick*, 57 U.S. 480, 488-89 (1853) ("The power to inflict vindictive or punitive damages is *committed to the discretion and judgment of the court* within the limit of trebling the actual damages found by the jury.");
- *Day v. Woodworth*, 54 U.S. 363, 372 (1851) ("[I]f, in the opinion of the court, the defendant has not acted in good faith, or has been stubbornly litigious, or has caused unnecessary expense and trouble to the plaintiff, the court may increase the amount of the verdict, to the extent of trebling it.").

Far from limiting enhanced damages to instances of willful infringement, these cases recognize a defendant's failure to act in good faith as one of several circumstances that might justify enhancement.

The Federal Circuit's contrary approach is based on a misreading of other case law from this Court. In particular, *Seagate* cited cases in which this Court remarked in passing that willful infringement would justify enhancing damages. *See Seagate*, 497 F.3d at 1368 (citing *Aro Mfg. Co. v. Convertible Top Replacement Co.*, 377 U.S. 476, 508 (1964); *Dowling v. United States*, 473 U.S. 207, 227 n.19 (1985); *Seymour v. McCormick*, 57 U.S. 480, 489 (1853)). But, as the concurring opinion in *Seagate* explained, those cases "do not hold that a finding of willfulness is *necessary* to support an award of enhanced damages," but, at most, "stand for the uncontroversial proposition that a finding of willfulness is *sufficient* to support an award of enhanced damages."

Id. at 1381 (Gajarsa, J., concurring) (emphasis in original). They are thus fully consistent with this Court's century and a half of precedent interpreting § 284 and its predecessors to give district courts broad discretion to determine when enhancement is appropriate.

2. The Federal Circuit has taken the inquiry even further away from the statutory text and this Court's precedent in defining "willful infringement." It has held that an infringer's subjective bad faith is insufficient, standing alone, to show willfulness. Instead, it has equated willfulness with "objective recklessness," required a threshold showing "that the infringer acted despite an objectively high likelihood that its actions constituted infringement of a valid patent," and added that "[t]he state of mind of the accused infringer is not relevant to this objective inquiry." *Seagate*, 497 F.3d at 1371. Only if this "objective" prong is met will the Federal Circuit allow district courts to consider the infringer's subjective state of mind and find willfulness. That cannot be right.

For one thing, as Judge O'Malley explained, this is the same, "overly rigid" two-part inquiry that *Octane* rejected as the standard for awarding attorney fees under 35 U.S.C. § 285. (App. 26a-28a.) *Octane* rejected that two-part test because it "superimposes an inflexible framework onto statutory text that is inherently flexible," has "no roots in the text of § 285," and "is so demanding that it would appear to render § 285 largely superfluous." *Octane*, 134 S. Ct. at 1756-58. The same is true here. Section 284, like § 285, is a flexible provision that imposes no mechanical prohibitions on when district courts can enhance damages. In fact, § 284 is even more flexible than

§ 285, because § 284's text imposes no limits on the district court's discretion to enhance damages, while § 285 restricts fee-shifting to "exceptional" cases. Yet the Federal Circuit has interpreted § 284 so narrowly that it forbids district courts from enhancing damages even in cases of bad faith infringement, so long as the defendant presents a non-sham trial defense, rendering § 284 "largely superfluous." This case is one example. Other subsequent cases have applied the same rigid rule. *See, e.g.*, *Stryker Corp. v. Zimmer, Inc.*, 782 F.3d 649, 660-62 (Fed. Cir. 2015); *Global Traffic Techs., LLC v. Morgan*, __ F. App'x __, 2015 WL 3513416, at *7-8 (Fed. Cir. June 4, 2015).

For another thing, the Federal Circuit's rigid two-part test precludes enhanced damages in cases where this Court has said they are permissible. For example, *Aro* observed that a patentee "could in a case of willful *or bad-faith infringement* recover punitive or 'increased' damages under the statute's trebling provision." *Aro*, 377 U.S. 508 (emphasis added). Likewise, the cases cited above at pp. 15-16 permitted enhancing damages if the defendant "has not acted in good faith, or has caused unnecessary expense and injury to the plaintiff." *Teese*, 64 U.S. at 9. These cases show that bad faith infringement is an independent basis for enhancing damages under § 284, regardless of what defenses a hypothetical, objective observer might concoct after the fact. Yet the Federal Circuit's rigid test currently precludes enhancement based on bad faith alone.

What is more, the Federal Circuit was wrong to limit the concept of "willful infringement" to only "objectively reckless" conduct. A defendant who infringes in bad faith is a willful infringer. Although this Court has, in other contexts, extended the term "will-

fully" to include an actor who behaves in an "objectively reckless" manner, *Safeco Ins. Co. of Am. v. Burr*, 127 S. Ct. 2201, 2215 (2007), this does not suggest that someone who purposely acts in bad faith (and is thus even more culpable) is not also still guilty of acting "willfully." The Federal Circuit has thus adopted a test with the odd effect of letting defendants like Pulse, who act with the worst intent (bad faith), escape scot-free. That cannot be right, because the purpose of § 284 is to deter defendants from acting improperly. *See, e.g.*, S. Rep. No. 79-1503, at 2 (1946) ("[T]he present discretion to award triple damages, will discourage infringement of a patent by anyone thinking that all he would be required to pay if he loses the suit would be a royalty.").

B. The Proper Interpretation of § 284 Warrants Review Because of Its Important Consequences.

The Federal Circuit's departure from the text of § 284 is important enough to warrant this Court's attention for multiple reasons.

First, the Federal Circuit's rule negatively impacts a large category of cases—*i.e.*, suits where one competitor has appropriated its rival's patented technology. Competitor cases are the very types of cases where robust patent protection is needed. Patents "promote the progress of science and the useful arts," by permitting inventors a period of exclusivity to recoup their investment in bringing new technology to market. U.S. CONST. Art. I, § 8, cl. 8. If one competitor can intentionally copy another's patented technology with impunity, firms will be reluctant to invest the resources to solve seemingly intractable problems, like the problem Halo solved after years of

failure by Pulse and others. The Federal Circuit's rule permits such copying to go unpunished, so long as the infringer can conjure a non-frivolous trial defense. The only downside for an infringer is the payment of the same royalty that it would have paid had it acted in good faith.

Under the Federal Circuit's rigid standard, nearly every infringer can concoct a defense. The easiest approach is the one Pulse took here—arguing the patent is invalid as obvious under 35 U.S.C. § 103 by using the advantage of hindsight to locate and combine bits and pieces from prior publications to yield the invention. It is difficult for district courts to say that such a defense is a "sham" or "baseless" because it will turn on technical issues and expert testimony of notorious complexity. Even one of this Nation's finest judges has remarked on how challenging patent cases are, explaining that the technical issues are often "quite beyond the ability of the usual judge to understand without the expenditure of an inordinate amount of educational effort by counsel and of attempted self-education by the judge, and in many instances, even with it." *See* HENRY J. FRIENDLY, FEDERAL JURISDICTION: A GENERAL VIEW 156-57 (1973). As a result, the Federal Circuit's rule renders § 284 "largely superfluous," *Octane*, 134 S. Ct. at 1758, as most judges will find the technical issues too murky to say a defense is a sham.

Second, and relatedly, the Federal Circuit's rule is a particular threat to small businesses like Halo. Patents are the most valuable assets that many small businesses possess—they are often started with a valuable idea and little else. Yet the high cost of patent litigation makes it challenging for small businesses to enforce their patent rights effectively.

See, e.g., AIPLA 2013 Report of the Economic Survey, *available at* http://bit.ly/1yF9L9h (reporting patent litigation costs an average of $970K-$5.9 million, depending on the amount in controversy). They need § 284's enhanced damages provision to deter their larger competitors from stealing their ideas, just as Congress intended. *See, e.g.*, S. Rep. No. 79-1503, at 2 (1946) ("[T]he present discretion to award triple damages, will discourage infringement of a patent by anyone thinking that all he would be required to pay if he loses the suit would be a royalty."). But the Federal Circuit's rigid rule has disconnected § 284 from its deterrent purpose—larger competitors are now free to copy a patented product, undercut the smaller patentee's prices, and know that the cost of litigation will make it difficult for the patentee to fight back. If the patentee can ultimately muster the resources to file suit, the defendant need only concoct a non-sham defense to eliminate any risk its bad faith actions will be punished. The current rule will deter small businesses from investing in technology. That ultimately harms consumers because, as a study commissioned by the Small Business Administration found, "small firms are much more likely to develop emerging technologies than are large firms." Anthony Breitzman & Diana Hicks, ANALYSIS OF SMALL BUSINESS PATENTS BY INDUSTRY AND FIRM SIZE (Nov. 2008), *available at* http://bit.ly/1LoJZwL.

Third, the Federal Circuit's approach conflicts with the statutory presumption of validity. *See* 35 U.S.C. § 282(a) ("A patent shall be presumed valid."). The Federal Circuit's rigid framework allows infringers to presume a known patent is *in*valid and do nothing to avoid infringement, knowing that they can conjure up a non-frivolous obviousness defense later to inoculate themselves from enhanced damag-

es. That turns the statute on its head. A district court should have discretion to enhance damages where the defendant copies the patent, ignores the patentee's attempts to license, yet does nothing to seriously investigate the patent's validity despite the statutory presumption in § 282. Yet the Federal Circuit's current framework denies district courts that discretion. This Court has vigorously defended the presumption of validity in other cases. *Microsoft Corp. v. i4i Ltd. P'ship*, 131 S. Ct. 2238 (2011); *Commil USA, LLC v. Cisco Sys., Inc.*, 135 S. Ct. 1920, 1928-29 (2015). It should do so again here.

C. This Case is a Good Vehicle to Return Enhanced Damages to the Text of § 284.

This case is an excellent vehicle to fix the Federal Circuit's erroneous interpretation of § 284. It is the poster child for a major problem with the Federal Circuit's current test—*i.e.*, a defendant can act in bad faith before the suit is filed but automatically escape enhanced damages if, years later, its trial lawyers concoct a non-frivolous defense for litigation. Here, Pulse's pre-suit actions were the epitome of bad faith: Pulse copied Halo's patented products, spurned Halo's attempts to discuss a license, conducted only a "cursory" investigation into the patent, and never made a "conscious decision" that it had a right to do what it was doing. (*See* pp. 4-6 above.) Pulse was banking on the fact it could get away with bad faith infringement because Halo was too small to defend itself. Pulse has been right so far, because the district court didn't have the option to enhance damages. But a proper interpretation of § 284's text would give the district court that option. The court should at least have had discretion to balance Pulse's bad faith pre-suit conduct against whatever post-suit

defenses it concocted. Instead, the mere existence of a non-frivolous defense was the end of the story.

There is no reason to wait for another case to bring enhanced damages jurisprudence back to the text of § 284. The Federal Circuit has made it quite clear that it will not fix this problem itself. It denied rehearing *en banc* in this case, despite a forceful dissent from Judges O'Malley and Hughes, who correctly recognized that their court's test is a rigid artifice with no basis in § 284's text—just like the artifice this Court rejected in *Octane* for § 285. (App. 26a-28a.) Although two other judges expressed interest in these issues, they wrongly thought that Halo had not raised them or framed the issue so it was of sufficiently general importance. (App. 140a-145a.) But Halo has sought enhanced damages from the very beginning of this case, (A294-95), and its *en banc* petition had specifically noted that current § 284 jurisprudence conflicts with the statutory text and *Octane*. So the issue in this petition was squarely presented below. And, lest there be any doubt about whether the Federal Circuit intends to revisit these issues itself, that court denied rehearing *en banc* in another case on the same day as this one that also presented these same issues. *Stryker Corp. v. Zimmer, Inc.*, 596 F. App'x 924 (Fed. Cir. 2015). It has also continued to apply that rule in subsequent cases. *Global Traffic*, 2015 WL 3513416, at *7-8. This Court should step in and fix the problem before it goes any further.

II. The Federal Circuit's Interpretation of § 271(a) Warrants Review.

A. The Federal Circuit Misinterpreted the "Sells" and "Offers to Sell" Provisions of § 271(a).

The Federal Circuit erred in affirming a summary judgment that Pulse did not make infringing sales and offers for sale to Cisco under § 271(a). Section 271(a) provides that "whoever without authority . . . offers to sell or sells any patented invention, within the United States" is liable as an infringer. 35 U.S.C. § 271(a). The statutory text sets two conditions on imposing liability: (i) the defendant must have offered to sell or sold the patented invention, and (ii) the offer to sell or sale must have occurred within the United States. The Federal Circuit legally erred here in interpreting both the offer to sell and sell portions of the statute.

1. This Court has not previously interpreted "sells . . . within the United States" in § 271(a), but it has defined the word "sale" in other contexts. In those cases, the Court held that a sale includes a contract reflecting the parties' agreement:

> A sale really consists of two separate and distinct elements: *first, a contract of sale, which is completed when the offer is made and accepted*; and, second, a delivery of the property which may precede, be accompanied by, or follow, the payment of the price, as may have been agreed upon between the parties. *The substance of the sale is the agreement to sell, and its acceptance.*

Norfolk & W. Ry. Co. v. Sims, 191 U.S. 441, 447 (1903) (emphasis added). This is consistent with the

common law understanding of a "sale," which occurs once the parties have agreed to transfer goods at a specified price. *See, e.g.*, BLACK'S LAW DICTIONARY 1337 (7th ed. 1999) (emphasis added) (defining "sale" as "1. The transfer of property or title for a price. 2. *The agreement by which such a transfer takes place.* The four elements are (1) parties competent to contract, (2) mutual assent, (3) a thing capable of being transferred, and (4) a price in money paid or promised."). The Federal Circuit has likewise recognized that a contract constitutes a "sale" under § 271(a). *Transocean*, 617 F.3d at 1311 ("Our precedent establishes that a contract can constitute a sale to trigger infringement liability.").

The Federal Circuit's initial error here was to adopt a strange, patent-specific definition of what constitutes a contract sufficient to constitute a "sale." The quarterly agreements negotiated between Halo and Cisco are well-known outside patent law as "requirements contracts"—*i.e.*, the buyer agrees to obtain all (or a percentage) of its supply needs of a component from the seller at a specified price.

Requirements contracts have been deemed binding and enforceable at common law for over a century. There are too many authorities on the point to recite them all, so we provide only a few examples, including an early example from California, where Pulse and Cisco form their quarterly contracts. *See, e.g.*, *Brawley v. United States*, 96 U.S. 168 (1877) (enforcing requirements contract between seller and the army for cords of wood); *Bartlett Springs Co. v. Standard Box Co.*, 16 Cal. App. 671 (1911) (enforcing requirements contract for wooden boxes); 1 A. CORBIN, CONTRACTS § 156 (1963) ("A promise to buy from another person or company all or some of the

commodity or service that the promissor may thereafter need or require in his business is not an illusory promise and such a promise is a sufficient consideration for a return promise."); 1 S. WILLISTON, LAW OF CONTRACTS § 104A, at 402-03 (3d ed. 1957) ("Agreements to buy or sell what will be 'needed' or 'required' have been enforced by the courts with little difficulty, where the surrounding circumstances indicate the approximate scope of the promise. Such agreements are termed 'requirement contracts.'"); UNIFORM COMMERCIAL CODE § 2-306 (West 1963) (recognizing the enforceability of requirements contracts for the sale of goods); 48 C.F.R. § 16.503 (setting guidelines for requirements contracts to supply the United States).

What is more, Pulse and Cisco viewed the quarterly agreements as binding here. Pulse's President admitted that "[w]hen we submit that price, we're agreeing, if Cisco orders that number of parts, we will give them that price." (A15443-44.) Likewise, Cisco instructs its manufacturers to obtain Pulse products based on the agreed price and allocation. (*See, e.g.*, A15053-56, A15063-64.) To the extent there was any question about those facts, they must be taken as true, as this issue was resolved against Halo on summary judgment.

Despite the legal precedent showing that requirements contracts are binding sales and the parties' understanding that their agreement was binding, the Federal Circuit thought the quarterly agreements between Pulse and Cisco insufficient because they supposedly "did not constitute a firm agreement to buy and sell, binding on both Cisco and Pulse." (App. 15a.) The Federal Circuit gave no reason why the term "sells" should have a different

meaning in § 271(a) than it does elsewhere in commercial law. In fact, this Court's precedent dictates the term "sells" should have the same meaning in patent law that it does everywhere else. *United States v. Castleman*, 134 S. Ct. 1405, 1410 (2014) ("It is a settled principle of interpretation that, absent other indication, Congress intends to incorporate the well-settled meaning of the common-law terms it uses.").

2. Having concluded that Pulse did not "sell" any patented products to Cisco, the Federal Circuit declined to determine whether a U.S. contract is a sale "within the United States" under § 271(a). (App. 15a n.1.) This Court should hold that it is. The contracts here were negotiated and executed in the United States, are governed by California law, and are between two U.S. companies (Pulse and Cisco). (*See* pp. 7-8 above.) Although delivery occurs abroad and Cisco directs payment to Pulse through manufacturers located abroad, the contract is the "substance of the sale," *Norfolk*, 191 U.S. at 447, and it occurs in the United States. Moreover, Pulse's U.S. activities are harming a U.S. company—Halo—in the U.S. by generating interest in the infringing products in the U.S., and, ultimately, causing Halo to lose business from a U.S. customer. Indeed, Cisco testified that forming the quarterly requirements contract is "an expectation of doing business with Cisco," (A15063), which shows that Pulse would not make any sales of the Halo design to Cisco without these U.S. contracts.

The text of § 271(a) is most naturally read to cover Pulse's U.S. activities. The statute already recites other activities—*i.e.*, "uses" and "imports"—that involve delivery within the United States. This sug-

gests that the "sells" provision is not limited to transactions where delivery occurs in the United States, but also covers transactions where, as here, contracting occurs in the United States but delivery occurs abroad. Otherwise, the "sells" provision would be superfluous, which contradicts the "cardinal principle" that courts "must give effect, if possible, to every clause and word of a statute." *Loughrin v. United States*, 134 S. Ct. 2384, 2390 (2014).

This reading is consistent with this Court's treatment of the location of a "sale" in other contexts. For example, in *Norfolk & W. Ry. Co. v. Sims*, 191 U.S. 441 (1903), this Court held that, for purposes of a tax statute, a "sale" occurs at the place the offer and acceptance occur, not where the goods are delivered and paid for. *Id.* at 447. There, the offer and acceptance occurred in Illinois, while delivery, payment, and transfer of title occurred in North Carolina. The Court held that the "sale" was located in Illinois because "the substance of the sale is the agreement to sell and its acceptance." *Id.*

The same is true here—the "substance" of the "sale" is the quarterly U.S. contract that sets price and quantity (percentage allocation) for each specific product. The subsequent steps that involve overseas payment and delivery simply implement the terms of the already completed U.S. sale.

Interpreting § 271(a)'s sale provision to include a U.S. contract for the patented products also appropriately prevents U.S. harm to a U.S. patentee. Under the Federal Circuit's approach, a U.S. company like Pulse can reap the benefits of doing business in the U.S. with a U.S. customer like Cisco but escape § 271(a) liability. The Federal Circuit expressed con-

cern that imposing liability here might violate the presumption against extraterritoriality because delivery occurs abroad. (App. 15a-16a.) But, here, liability would be based on U.S. conduct—*i.e.*, Pulse's negotiation and contracting with Cisco in the U.S.—so there is no extraterritoriality problem. At most, extraterritoriality may have an impact on the amount of damages, not whether Pulse should be held liable or whether Halo should be entitled to an injunction prohibiting the infringing acts in the U.S.

3. The Federal Circuit made a similar error in its treatment of the provision of § 271(a) that makes "***offers*** to sell . . . within the United States" an infringing act. The Federal Circuit did not question that Pulse made an "offer to sell" to Cisco. Nor could it have—Pulse's President admitted that the quarterly bid meets the requirements for a commercial offer when he said that, "[w]hen we submit that price, we're agreeing, if Cisco orders that number of parts, we will give them that price." (A15443-44.) Moreover, the Federal Circuit did not question that the offers themselves occurred in the United States—they were conveyed from a Pulse employee in San Diego to a Cisco employee in San Jose. (A15003, A15010; A15051-52; A15070-81, A15094-95; A15583; A15096-97, A15098-124; A15134-37.)

Instead, the Federal Circuit held that this still did not constitute an "offer to sell . . . *within the United States*." (App. 18a-19a.) Citing its earlier decision in *Transocean Offshore Deepwater Drilling, Inc. v. Maersk Contractors USA, Inc.*, 617 F.3d 1296 (Fed. Cir. 2010), the court stated that "the location of the contemplated sale controls whether there is an offer to sell within the United States." (*Id.*) Apply-

ing that rule, the court referenced its prior conclusion that any "contemplated sale" between Pulse and Cisco did not occur in the United States. (*Id.*)

The Federal Circuit's statutory interpretation was legally erroneous. The statutory text simply requires that the offer itself occur in the United States—it imposes liability on whoever "makes, uses, offers to sell or sells any patented invention, within the United States." 35 U.S.C. § 271(a). The basic rules of grammar require that the phrase "within the United States" apply the same way to each finite verb—*i.e.*, makes, uses, offers, sells—that precedes it. *See* ANDREA LUNSFORD & ROBERT CONNORS, THE ST. MARTINS HANDBOOK 177-79, 185-86 (3d ed. 1995) (discussing verbal phrases and adverb clauses). As a result, the term "within the United States" is properly understood to modify the finite verb "offers," not the infinitive "to sell." *Id.* So the statute simply requires that the "offer" occur "within the United States"—nothing more, nothing less. *Id.*

The Federal Circuit's approach is also inconsistent with the purpose of the statute. Congress added the "offers to sell" provision to § 271(a) in 1994 to conform U.S. law to the Uruguay Round's Trade-Related Aspects of Intellectual Property Agreement (TRIPS). This additional act of infringement was meant to prevent a defendant from "generating interest in a potential infringing product to the commercial detriment of the rightful patentee." *3D Sys., Inc. v. Aarotech Labs., Inc.*, 160 F.3d 1373, 1379 (Fed. Cir. 1998). A party who issues offers for a patented product within the United States is "generating interest" in the product from U.S. customers that, as here, might cause the patentee to lose sales

to those U.S. customers. The statute was thus intended to cover this very type of conduct. The point of amending the statute was to cover a situation in which only an offer was made. Yet the Federal Circuit's rule allows later performance outside the United States to negate the U.S. infringement that has already occurred once the U.S. offer was made.

The Federal Circuit's approach also introduces needless ambiguity in applying the statute. A party can make an "offer to sell" under § 271(a) without providing enough detail to determine where the contemplated "sale" occurs. For example, an "offer" need only include "a description of the allegedly infringing merchandise and the price at which it can be purchased." *3D Sys.*, 160 F.3d at 1379. The offer need not specify the place of future delivery, payment, or where title is to be transferred. But the Federal Circuit here held that the place of contemplated delivery controlled where the sale occurred. It is thus unclear how that court could apply its test when the place of delivery is not specified. What is worse, the test gives U.S. companies an easy way to circumvent U.S. patent law—they could conduct the activities that constitute "the substance of the sale," *Norfolk*, 191 U.S. at 447, in the United States, but then specify delivery abroad to avoid any liability.

B. The Proper Interpretation of § 271(a) is an Important Question That Has Previously Attracted this Court's Attention.

Several reasons show why the interpretation of § 271(a) warrants this Court's review.

1. This Court has previously expressed interest in reviewing the Federal Circuit's interpretation of

§ 271(a). The Court called for the Solicitor General's views regarding whether to grant *certiorari* in *Transocean*, the case the Federal Circuit applied here. *See Maersk Drilling USA, Inc. v. Transocean Offshore Deepwater Drilling, Inc.*, No. 13-43 (Oct. 7, 2013). That case settled before the Solicitor could respond. But several *amici* supported *certiorari*, and one group of law professors pointed to this case as an example of why *Transocean* should be reversed. *See* Br. *Amici Curiae* of Ten Intellectual Property Law Professors in No. 13-43 at 14, *available at* http://bit.ly/1pYxI2V. They explained that "it would seem appropriate under territoriality principles to regulate activity within the United States," like the contracting between Pulse and Cisco, and called the result in this case "perplexing." *Id.* This case presents the opportunity for this Court to review the issue it was unable to review in *Transocean*.

2. The issue in this case frequently recurs as more U.S. companies have moved their manufacturing overseas. Lower courts have been deeply split on the various territoriality issues raised by § 271(a). *Compare ION, Inc. v. Sercel, Inc.*, 2010 WL 3768110, at *4 (E.D. Tex. Sept. 16, 2010), *Semiconductor Energy Lab. Co. v. Chi Mei Optoelectronics Corp.*, 531 F. Supp. 2d 1084, 1110–11 (N.D. Cal. 2007), *Wing Shing Prods. (BVI), Ltd. v. Simatelex Manufactory Co.*, 479 F. Supp. 2d 388, 401 (S.D.N.Y. 2007), *Cybiotronics, Ltd. v. Golden Source Elecs., Ltd.*, 130 F. Supp. 2d 1152, 1170–71 (C.D. Cal. 2001), *and Quality Tubing, Inc. v. Precision Tube Holdings Corp.*, 75 F. Supp. 2d 613, 614–25 (S.D. Tex. 1999), *with MediaTek Inc. v. Freescale Semiconductor, Inc.*, 2014 WL 580836 (N.D. Cal. Feb. 13, 2014), *Wesley Jessen Corp. v. Bausch & Lomb, Inc.*, 256 F. Supp. 2d 228,

233–34 (D. Del. 2003), *and FieldTurf, Inc. v. Sw. Recreational Indus., Inc.*, 235 F. Supp. 2d 708, 731–32 (E.D. Ky. 2002). The Federal Circuit's questionable resolution of this split warrants careful review, because it will impact many parties going forward.

3. This case will also have significant economic consequences. The Federal Circuit's decision dramatically deflates the value of the patent incentive in industries where U.S. companies have outsourced their manufacturing. It allows U.S. companies (like Pulse) to escape liability for their transactions with U.S. customers (like Cisco) by ensuring that all manufacturing and delivery occurs abroad. These U.S. companies will accelerate the move of their manufacturing facilities to countries where intellectual property rights are not readily enforceable. And the result will be the further loss of domestic manufacturing jobs, hurting American workers. The Federal Circuit's decision creates a situation in which a U.S. company would be foolish to manufacture products here, as its liability would be far greater under § 271(a)'s "makes" provision. There is no reason to interpret § 271(a) to punish the companies that keep their manufacturing here while hurting U.S. companies (like Halo) who rely on the patent grant to recoup their investments in new technology.

C. This Case is a Good Vehicle to Resolve the Proper Interpretation of § 271(a).

This case is an ideal vehicle for fixing the Federal Circuit's interpretation of § 271(a). It presents an increasingly common fact pattern—where a sale between two U.S. companies agreed upon in the United States harms a U.S. patentee. Moreover, this case is indicative of the problems with the Federal Circuit's

"perplexing" jurisprudence in this area. *See* Br. *Amici Curiae* of Ten Intellectual Property Law Professors in No. 13-43 at 14, *available at* http://bit.ly/1pYxI2V. The Federal Circuit will not change its jurisprudence without this Court's intervention—between *Transocean* and this case, that court has charted a steady course in the wrong direction. It is thus time for this Court to grant review and correct the Federal Circuit's interpretation of § 271(a).

CONCLUSION

For the reasons above, the petition for a writ of *certiorari* should be granted.

Respectfully submitted,

CRAIG E. COUNTRYMAN
Counsel of Record
Fish & Richardson P.C.
12390 El Camino Real
San Diego, CA 92130
(858) 678-5070
countryman@fr.com

MICHAEL J. KANE
WILLIAM R. WOODFORD
JOHN A. DRAGSETH
Fish & Richardson P.C.
3200 RBC Plaza
60 South Sixth Street
Minneapolis, MN 55402
(612) 335-5070

Attorneys for Petitioner
Halo Electronics, Inc.

June 22, 2015

APPENDICES

"perplexing" jurisprudence in this area. *See* Br. *Amici Curiae* of Ten Intellectual Property Law Professors in No. 13-43 at 14, *available at* http://bit.ly/1pYxI2V. The Federal Circuit will not change its jurisprudence without this Court's intervention—between *Transocean* and this case, that court has charted a steady course in the wrong direction. It is thus time for this Court to grant review and correct the Federal Circuit's interpretation of § 271(a).

CONCLUSION

For the reasons above, the petition for a writ of *certiorari* should be granted.

Respectfully submitted,

CRAIG E. COUNTRYMAN
Counsel of Record
Fish & Richardson P.C.
12390 El Camino Real
San Diego, CA 92130
(858) 678-5070
countryman@fr.com

MICHAEL J. KANE
WILLIAM R. WOODFORD
JOHN A. DRAGSETH
Fish & Richardson P.C.
3200 RBC Plaza
60 South Sixth Street
Minneapolis, MN 55402
(612) 335-5070

Attorneys for Petitioner
Halo Electronics, Inc.

June 22, 2015

APPENDIX A

UNITED STATES COURT OF APPEALS FOR THE FEDERAL CIRCUIT

HALO ELECTRONICS, INC.
Plaintiff-Appellant,

v.

PULSE ELECTRONICS, INC., PULSE ELECTRONICS CORPORATION,
Defendants-Appellees,

2013-1472, 2013-1656

Appeal from the United States District Court for the District of Nevada in No. 07-CV-0331, Judge Philip M. Pro.

Decided: October 22, 2014

WILLIAM R. WOODFORD, Fish & Richardson P.C., of Minneapolis, Minnesota, argued for plaintiff-appellant. With him on the brief were MICHAEL J. KANE of Minneapolis, Minnesota, and CRAIG E. COUNTRYMAN, of San Diego, California.

MARK L. HOGGE, Dentons US LLP, of Washington, DC, argued for defendants-cross appellants. With him on the brief were SHAILENDRA K. MAHESHWARI, CHARLES R. BRUTON, and RAJESH C. NORONHA.

Before LOURIE, O'MALLEY, and HUGHES, Circuit Judges.

Opinion for the court filed by Circuit Judge LOURIE.

Concurring opinion filed by Circuit Judge O'MALLEY, with whom Circuit Judge HUGHES joins.

LOURIE, Circuit Judge.

Halo Electronics, Inc. ("Halo") appeals from the decisions of the United States District Court for the District of Nevada (1) granting summary judgment that Pulse Electronics, Inc. and Pulse Electronics Corp. (collectively "Pulse") did not sell or offer to sell within the United States the accused products that Pulse manufactured, shipped, and delivered to buyers outside the United States, and thus that Pulse did not directly infringe Halo's U.S. Patents 5,656,985 (the "'985 patent"), 6,297,720 (the "'720 patent"), and 6,344,785 (the "'785 patent") (collectively "the Halo patents"); and (2) holding that Pulse's infringement of the Halo patents with respect to certain accused products that Pulse sold and delivered in the United States was not willful. *See Halo Elecs.*,

Inc. v. Pulse Eng'g, Inc., 810 F. Supp. 2d 1173, 1205–08 (D. Nev. 2011) (sale and offer for sale); *Halo Elecs., Inc. v. Pulse Elecs., Inc.*, No. 2:07-CV-00331, 2013 WL 2319145, at *14–16 (D. Nev. May 28, 2013) (willfulness).

Pulse cross-appeals from the court's decisions (1) construing the claim limitation "electronic surface mount package" in the Halo patents; (2) construing the claim limitation "contour element" in Pulse's U.S. Patent 6,116,963 (the "'963 patent") that Pulse asserted in its counterclaim; and (3) holding that the asserted claims of the Halo patents were not invalid for obviousness. *See Halo Elecs., Inc. v. Pulse Elecs., Inc.*, 721 F. Supp. 2d 989, 998–1001 (D. Nev. 2010) (claim construction); *Halo*, 2013 WL 2319145, at *1–7 (obviousness); *Halo Elecs., Inc. v. Pulse Elecs., Inc.*, No. 2:07-CV-00331, 2013 WL 4458754, at *1–3 (D. Nev. Aug. 16, 2013) (obviousness).

Because we conclude that Pulse did not sell or offer to sell within the United States those accused products that Pulse manufactured, shipped, and delivered outside the United States, we affirm the summary judgment of no direct infringement of the Halo patents by those products. In addition, we find Halo's argument on appeal concerning the issue of willfulness unpersuasive and accordingly affirm the judgment of no willful infringement of the Halo patents with respect to products that were delivered in the United States. On the cross-appeal, because we find no reversible error in the contested claim constructions, we affirm the judgment of direct infringement of the Halo patents with respect to products that Pulse delivered in the United States and the judgment of inducement with respect to products that Pulse delivered outside the United States but

were ultimately imported into the United States by others, as well as the judgment of noninfringement of Pulse's '963 patent. We also affirm the judgment that the asserted claims of the Halo patents were not invalid for obviousness.

BACKGROUND

Halo is a supplier of electronic components and owns the '985, '720, and '785 patents directed to surface mount electronic packages containing transformers for mounting on a printed circuit board inside electronic devices such as computers and internet routers. The Halo patents are all derived from an application filed on August 10, 1995. At issue here are claims 6–8 and 16 of the '985 patent, claims 1 and 6 of the '720 patent, and claims 40 and 48 of the '785 patent (collectively "the asserted claims"). Claim 6 of the '985 patent is representative and reads as follows:

> 6. An electronic surface mount package for mounting on a printed circuit board in an electronic device, said electronic surface mount package comprising:
>
> a one piece construction package having a side wall and an open bottom,
>
> a plurality of toroid transformers carried within said package by a soft silicone material, said toroid transformers each having wires wrapped thereon,
>
> a plurality of terminal pins molded within and

> extending from the bottom of said package, each of said pins extending through a bottom of said side wall and having a notched post upon which said wires from said transformers are wrapped and soldered thereon, respectively.

'985 patent col. 4 ll. 19–33.

Pulse, another supplier of electronic components, designs and sells surface mount electronic packages and manufactures those products in Asia. Some of Pulse's products were delivered by Pulse to customers in the United States, but the majority of them were delivered outside the United States, for example, to contract manufacturers for companies such as Cisco. Those contract manufacturers incorporated the electronic packages supplied by Pulse into end products overseas, including internet routers manufactured for Cisco, which were then sold and shipped to consumers around the world.

For those products that Pulse delivered abroad, all purchase orders were received at Pulse's sales offices abroad. *Halo*, 810 F. Supp. 2d at 1207. However, Pulse engaged in pricing negotiations in the United States with companies such as Cisco, and Pulse's employees in the United States approved prices that its agents quoted to foreign customers when the quoted prices fell below certain thresholds. Pulse also engaged in other activities in the United States, including meeting regularly with Cisco design engineers, sending product samples to Cisco for pre-approval, attending sales meetings with its customers, and providing post-sale support for its products.

Although Cisco outsourced its manufacturing activities to foreign contract manufacturers, Cisco negotiated with its component suppliers the prices that its contract manufacturers would pay when purchasing component parts. As one of Cisco's component suppliers, Pulse executed a general agreement with Cisco that set forth manufacturing capacity, low price warranty, and lead time terms. J.A. 15135–37. However, that general agreement did not refer to any specific Pulse product or price. Cisco typically sent a request for quote to its component suppliers and Pulse responded with the proposed price and minimum quantity for each product as identified by its part number. After further negotiation, Cisco issued the agreed-upon price, projected demand, and percentage allocation to Pulse for each product for the upcoming quarter. The percentage allocation divided Cisco's projected quarterly demand among its suppliers. Cisco then communicated the price and allocation to its contract manufacturers in Asia, and the contract manufacturers were expected to apply the Cisco price and allocation when ordering components from Pulse and other suppliers.

Upon receipt of purchase orders abroad, Pulse delivered the electronic package products from its manufacturing facility in Asia to Cisco contract manufacturers, also located in Asia, which then paid Pulse. After assembling the end products, the contract manufacturers submitted invoices to Cisco that itemized the cost of Pulse products and other components that were incorporated into the Cisco end products. Cisco then paid the contract manufacturers for the end products.

Pulse allegedly knew of the Halo patents as early as 1998. In 2002, Halo sent Pulse two letters offering licenses to its patents, but did not accuse Pulse of infringement in those letters. J.A. 5953–54. The president of Pulse contacted a Pulse engineer, who spent about two hours reviewing the Halo patents and concluded that they were invalid in view of prior Pulse products. Pulse did not seek an opinion of counsel on the validity of the Halo patents at that time and continued to sell its surface mount electronic package products. A Pulse witness later testified that she was "not aware of anyone in the company ... that made a conscious decision" that "it was permissible to continue selling" those products. J.A. 2245.

In 2007, Halo sued Pulse for patent infringement. Pulse denied infringement and challenged the validity of the Halo patents based on obviousness and other grounds. Pulse also counterclaimed that Halo infringed Pulse's '963 patent directed to microelectronic connectors.

The district court first construed the disputed claim limitations in the Halo patents and Pulse's '963 patent. Relevant to this appeal, the court construed "electronic surface mount package" in the preamble of the Halo patent claims as non-limiting. *Halo*, 721 F. Supp. 2d at 999–1001. The court then further construed the term to mean "an electronic device configured to attach to the surface of a DC voltage only printed circuit board." *Id.* In addition, the court construed "contour element" in the '963 patent claims to mean "a raised or recessed feature that physically contacts the bend of an electrical lead both before and after the modular plug is inserted into the cavity." Id. at 998–99. In view of that latter construction, the parties stipulated to a judgment of

noninfringement of the Pulse '963 patent. *Halo Elecs., Inc. v. Pulse Elecs., Inc.*, No. 2:07-CV-00331, ECF No. 215 (D. Nev. Sept. 2, 2010).

Pulse moved for summary judgment that it did not directly infringe the Halo patents by selling or offering to sell products that Pulse manufactured, shipped, and delivered outside the United States. The district court granted the motion, holding that those products were sold and offered for sale outside the United States and beyond the scope of § 271(a). *Halo*, 810 F. Supp. 2d at 1206–08.

The parties next proceeded to trial on Halo's claims of (1) direct infringement by products that Pulse shipped into the United States and (2) inducement of infringement by products that Pulse shipped outside the United States but were incorporated into end products that were ultimately imported into the United States. The jury found that: (1) Pulse directly infringed the Halo patents with products that it shipped into the United States; (2) it induced others to infringe the Halo patents with products that it delivered outside the United States but ultimately were imported into the United States in finished end products; (3) it was highly probable that Pulse's infringement was willful; and (4) the asserted claims of the Halo patents were not invalid for obviousness. *Halo*, 2013 WL 2319145, at *1; *Halo Elecs., Inc. v. Pulse Elecs., Inc.*, No. 2:07-CV-00331, ECF No. 482 (D. Nev. Nov. 26, 2012). The jury awarded Halo $1.5 million in reasonable royalty damages. *Id.*

In response to Pulse's post-trial motion, the district court concluded that the objective component of a willfulness inquiry was not satisfied because Pulse "reasonably relied on at least its obviousness defense" and Pulse's unsuccessful obviousness de-

fense was not "objectively baseless." *Halo*, 2013 WL 2319145, at *15. The court therefore held that Pulse's infringement was not willful. Id. at *16.

Pulse also moved for JMOL of invalidity for alleged obviousness of the Halo patent claims, which the district court denied. *Halo*, 2013 WL 2319145, at *1–7; *Halo*, 2013 WL 4458754, at *1–3. The court reasoned that, because Pulse did not file a preverdict motion under Fed. R. Civ. P. 50(a) on the issue of obviousness, Pulse had waived its right to challenge the jury's implicit factual findings underlying the nonobviousness general verdict. Id. While noting that "each of the elements present in the asserted patent claims also were present in the prior art, except the standoff element" in two of the asserted claims, *Halo*, 2013 WL 2319145, at *3, the court presumed that the jury resolved all factual disputes relating to the scope and content of the prior art and secondary considerations in Halo's favor and concluded that the asserted claims were not invalid for obviousness based upon those presumed factual findings, id. at *3–7.

Halo timely appealed and Pulse timely cross-appealed. We have jurisdiction pursuant to 28 U.S.C. § 1295(a)(1).

DISCUSSION

I. Sale and Offer for Sale

We review the district court's grant or denial of summary judgment under the law of the regional circuit, here the Ninth Circuit. *Lexion Med., LLC v. Northgate Techs.*, Inc., 641 F.3d 1352, 1358 (Fed. Cir. 2011). Applying the law of the Ninth Circuit, we review the grant or denial of summary judgment de novo. *Humane Soc'y of the U.S. v. Locke*, 626 F.3d

1040, 1047 (9th Cir. 2010). Summary judgment is appropriate when, drawing all justifiable inferences in the nonmovant's favor, "there is no genuine dispute as to any material fact and the movant is entitled to judgment as a matter of law." Fed. R. Civ. P. 56(a); *Anderson v. Liberty Lobby, Inc.*, 477 U.S. 242, 255 (1986).

Halo argues that the district court erred in granting summary judgment of no direct infringement with respect to products that Pulse delivered abroad. Halo contends that those products were sold and offered for sale within the United States because negotiations and contracting activities occurred within the United States, which resulted in binding contracts that set specific terms for price and quantity. Halo argues that the location of the sale or offer for sale should not be limited to the location of delivery. Halo also argues that it suffered economic harm in the United States as a result of Pulse's sales.

Pulse responds that the products at issue were sold or offered for sale outside the United States because those products were manufactured, ordered, invoiced, shipped, and delivered abroad. Pulse maintains that its pricing discussions with Cisco in the United States were merely forecasts and were not a guarantee that Pulse would receive any actual order from any of Cisco's contract manufacturers. Pulse also responds that the district court's holding is consistent with our case law and the presumption against extraterritorial application of United States laws. Pulse contends that Halo improperly sought to expand the geographical scope of § 271(a) to reach activities outside the United States.

We agree with Pulse that the district court did not err in granting summary judgment of no direct infringement with respect to those products that Pulse manufactured, shipped, and delivered outside the United States because those products were neither sold nor offered for sale by Pulse within the United States.

A. Sale

Section 271(a) of the patent statute provides in relevant part that "whoever without authority makes, uses, offers to sell, or sells any patented invention, within the United States . . . infringes the patent." 35 U.S.C. § 271(a) (emphases added); *Microsoft Corp. v. AT&T Corp.*, 550 U.S. 437, 441 (2007) ("It is the general rule under United States patent law that no infringement occurs when a patented product is made and sold in another country."). We first consider whether the products that Pulse manufactured, shipped, and delivered to buyers abroad were sold within the United States for purposes of § 271(a).

Our earlier cases addressing the issue of the location of a sale arose in the context of personal jurisdiction. In *North American Philips Corp. v. American Vending Sales, Inc.*, 35 F.3d 1576 (Fed. Cir. 1994), a case involving domestic sales by defendants who shipped products from Texas and California free on board (f.o.b.) to buyers in Illinois, and concerning whether a trial court in Illinois had personal jurisdiction over the defendants, we held that patent infringement occurs where the infringing sales are made. *Id.* at 1577–79 (citing *Beverly Hills Fan Co. v. Royal Sovereign Corp.*, 21 F.3d 1558, 1570–71 (Fed. Cir. 1994)). We stated that:

> [T]he "selling" of an infringing article has both a physical and a conceptual dimension to it. That is to say, it is possible to define the situs of the tort of infringement-by-sale either in real terms as including the location of the seller and the buyer and perhaps the points along the shipment route in between, or in formal terms as the single point at which some legally operative act took place, such as the place where the sales transaction would be deemed to have occurred as a matter of commercial law.

Id. at 1579. We rejected the defendants' argument that the location of the sale was limited to "the place where legal title passe[d] rather than the more familiar places of contracting and performance." Id. (citing *Burger King Corp. v. Rudzewicz*, 471 U.S. 462, 478–79 (1985)). And we held that the sale in that case occurred in Illinois where the buyer was located, but "not necessarily only there." Id. Thus, under North American Philips, a sale may occur at multiple locations, including the location of the buyer, for purposes of personal jurisdiction.

In subsequent cases in which we addressed the issue of liability under § 271(a) rather than personal jurisdiction, we applied similar analyses to determine where a sale occurred based on factors that included places of contracting and performance. *Litecubes, LLC v. N. Light Prods., Inc.*, 523 F.3d 1353, 1370 (Fed. Cir. 2008); *MEMC Elec. Materials, Inc. v. Mitsubishi Materials Silicon Corp.*, 420 F.3d 1369, 1377 (Fed. Cir. 2005). Although the place of

contracting may be one of several possible locations of a sale to confer personal jurisdiction, we have not deemed a sale to have occurred within the United States for purposes of liability under § 271(a) based solely on negotiation and contracting activities in the United States when the vast majority of activities underlying the sales transaction occurred wholly outside the United States. For such a sale, one must examine whether the activities in the United States are sufficient to constitute a "sale" under § 271(a), recognizing that a strong policy against extraterritorial liability exists in the patent law. *See Microsoft*, 550 U.S. at 455 ("The traditional understanding that our patent law operate[s] only domestically and do[es] not extend to foreign activities is embedded in the Patent Act itself." (alterations in original) (citation and quotation marks omitted)); *MEMC*, 420 F.3d at 1375–76 ("[T]he reach of section 271(a) is limited to infringing activities that occur within the United States.").

The patent statute does not define the meaning of a "sale" within the United States for purposes of § 271(a). We have stated that "the ordinary meaning of a sale includes the concept of a transfer of title or property." *NTP, Inc. v. Research in Motion, Ltd.*, 418 F.3d 1282, 1319 (Fed. Cir. 2005). Indeed, Article 2 of the Uniform Commercial Code, which is recognized as a persuasive authority on the sale of goods, provides that "[a] 'sale' consists in the passing of title from the seller to the buyer for a price." U.C.C. § 2-106; *see also Black's Law Dictionary* 1364 (8th ed. 2004) (defining "sales" as "[t]he transfer of property or title for a price"). Section 2-106 separately defines a "contract for sale" as including "both a present sale

of goods and a contract to sell goods at a future time."

While we have held that a sale is "not limited to the transfer of tangible property" but may also be determined by "the agreement by which such a transfer takes place," *Transocean Offshore Deepwater Drilling, Inc. v. Maersk Contractors USA, Inc.*, 617 F.3d 1296, 1311 (Fed. Cir. 2010) (citing NTP, 418 F.3d at 1319), the location of actual or anticipated performance under a "contract for sale" remains pertinent to the transfer of title or property from a seller to a buyer, see id. at 1310 (considering the location of delivery and performance under a contract). Consistent with all of our precedent, we conclude that, when substantial activities of a sales transaction, including the final formation of a contract for sale encompassing all essential terms as well as the delivery and performance under that sales contract, occur entirely outside the United States, pricing and contracting negotiations in the United States alone do not constitute or transform those extraterritorial activities into a sale within the United States for purposes of § 271(a).

On undisputed facts, the products under discussion here were manufactured, shipped, and delivered to buyers abroad. *Halo*, 810 F. Supp. 2d at 1207 ("All accused products [at issue] were at no point, in transit or otherwise, in the United States."). In addition, Pulse received the actual purchase orders for those products abroad. Although Pulse and Cisco had a general business agreement, that agreement did not refer to, and was not a contract to sell, any specific product. J.A. 15135–37. While Pulse and Cisco engaged in quarterly pricing negotiations for specific products, the negotiated price and projected demand

did not constitute a firm agreement to buy and sell, binding on both Cisco and Pulse. Instead, Pulse received purchase orders from Cisco's foreign contract manufacturers, which then firmly established the essential terms including price and quantity of binding contracts to buy and sell. Moreover, Pulse was paid abroad by those contract manufacturers, not by Cisco, upon fulfillment of the purchase orders. Thus, substantial activities of the sales transactions at issue, in addition to manufacturing and delivery, occurred outside the United States. Although Halo did present evidence that pricing negotiations and certain contracting and marketing activities took place in the United States, which purportedly resulted in the purchase orders and sales overseas, as indicated, such pricing and contracting negotiations alone are insufficient to constitute a "sale" within the United States.[1]

Any doubt as to whether Pulse's contracting activities in the United States constituted a sale within the United States under § 271(a) is resolved by the presumption against extraterritorial application of United States laws. "The presumption that United States law governs domestically but does not rule the world applies with particular force in patent law." *Microsoft*, 550 U.S. at 454–55. As the Supreme Court has stated on multiple occasions, "[o]ur patent

---

[1] On these facts, we need not reach Halo's argument that the place where a contract for sale is legally formed can itself be determinative as to whether a sale has occurred in the United States because we agree with the district court here that the pricing negotiations and contracting activities in the United States to which Halo points did not constitute the final formation of a definitive, binding contract for sale.

system makes no claim to extraterritorial effect; these acts of Congress do not, and were not intended to, operate beyond the limits of the United States, and we correspondingly reject the claims of others to such control over our markets." *Id.* at 444 (quoting *Deepsouth Packing Co. v. Laitram Corp.*, 406 U.S. 518, 531 (1972) (quoting *Brown v. Duchesne*, 60 U.S. (19 How.) 183, 195 (1857))) (internal citation and quotation marks omitted).

"Foreign conduct is [generally] the domain of foreign law," and in patent cases, foreign law "may embody different policy judgments about the relative rights of inventors, competitors, and the public in patented inventions." *Id.* at 455 (alteration in original) (quoting Brief for United States as *Amicus Curiae* 28). As the Supreme Court has stated, if one desires to prevent the selling of its patented invention in foreign countries, its proper remedy lies in obtaining and enforcing foreign patents. *See Deepsouth*, 406 U.S. at 531 ("To the degree that the inventor needs protection in markets other than those of this country, the wording of 35 U.S.C. §§ 154 and 271 reveals a congressional intent to have him seek it abroad through patents secured in countries where his goods are being used.").

We also reject Halo's argument that the sales at issue occurred in the United States simply because Halo suffered economic harm as a result of those sales. The incurring of harm alone does not control the infringement inquiry. As indicated, Pulse's activities in the United States were insufficient to constitute a sale within the United States to support direct infringement. *See N. Am. Philips*, 35 F.3d at 1579 ("[T]he statute on its face clearly suggests the conception that the 'tort' of patent in-

fringement occurs where the offending act is committed and not where the injury is felt."). Moreover, Halo recovered damages for products that Pulse delivered outside the United States but were ultimately imported into the United States in finished end products based on a theory of inducement.

Following Halo's logic, a foreign sale of goods covered by a U.S. patent that harms the business interest of a U.S. patent holder would incur infringement liability under § 271(a). Such an extension of the geographical scope of § 271(a) in effect would confer a worldwide exclusive right to a U.S. patent holder, which is contrary to the statute and case law. *See, e.g., Power Integrations, Inc. v. Fairchild Semiconductor Int'l, Inc.*, 711 F.3d 1348, 1371– 72 (Fed. Cir. 2013) ("[T]he entirely extraterritorial production, use, or sale of an invention patented in the United States is an independent, intervening act that, under almost all circumstances, cuts off the chain of causation initiated by an act of domestic infringement.") (citing *Morrison v. Nat'l Austl. Bank Ltd.*, 561 U.S. 247, 266 (2010) ("But the presumption against extraterritorial application would be a craven watchdog indeed if it retreated to its kennel whenever *some* domestic activity is involved in the case." (emphasis in original))).

We therefore hold that the district court did not err in granting summary judgment that Pulse did not sell within the United States those products that Pulse manufactured, shipped, and delivered abroad.

B. Offer for Sale

We next consider whether Pulse offered to sell within the United States those products that Pulse manufactured, shipped, and delivered abroad. An "offer to sell" generally occurs when one "communicate[s] a manifestation of willingness to enter into a bargain, so made as to justify another person in understanding that his assent to that bargain is invited and will conclude it." *MEMC*, 420 F.3d at 1376 (internal quotation marks omitted). We have held that "a description of the allegedly infringing merchandise and the price at which it can be purchased" may constitute an offer to sell. *3D Sys., Inc. v. Aarotech Labs., Inc.*, 160 F.3d 1373, 1379 (Fed. Cir. 1998). *3D Systems* did not, however, involve international transactions and in that case this court considered the issue of offer to sell in a personal jurisdiction context.

More importantly, we have held that "the location of the contemplated sale controls whether there is an offer to sell *within the United States*." *Transocean*, 617 F.3d at 1309 (emphasis added). "In order for an offer to sell to constitute infringement, the offer must be to sell a patented invention within the United States." *Id.* In *Transocean*, contract negotiations occurred outside the United States for delivery and performance in the United States. This court held that the location of the contemplated sale controlled and that the offer to sell infringed the patent at issue.

The case now before us involves the opposite situation, where the negotiations occurred in the United States, but the contemplated sale occurred outside the United States. We adopt the reasoning of

Transocean and conclude here that Pulse did not directly infringe the Halo patents under the "offer to sell" provision by offering to sell in the United States the products at issue, because the locations of the contemplated sales were outside the United States. Cisco outsourced all of its manufacturing activities to foreign countries, and it is undisputed that the locations of the contemplated sales were outside the United States. Likewise, with respect to other Pulse customers, there is no evidence that the products at issue were contemplated to be sold within the United States.

An offer to sell, in order to be an infringement, must be an offer contemplating sale in the United States. Otherwise, the presumption against extraterritoriality would be breached. If a sale outside the United States is not an infringement of a U.S. patent, an offer to sell, even if made in the United States, when the sale would occur outside the United States, similarly would not be an infringement of a U.S. patent. We therefore hold that Pulse did not offer to sell the products at issue within the United States for purposes of § 271(a).

For the foregoing reasons, we affirm the summary judgment of no direct infringement with respect to those products that Pulse manufactured, shipped, and delivered abroad.

II. Willfulness

Establishing willful infringement of a valid patent requires a two-prong analysis entailing an objective and a subjective inquiry. First, "a patentee must show by clear and convincing evidence that the infringer acted despite an objectively high likelihood

that its actions constituted infringement of a valid patent." *In re Seagate Tech., LLC*, 497 F.3d 1360, 1371 (Fed. Cir. 2007) (en banc). "The state of mind of the accused infringer is not relevant to this objective inquiry." *Id.* Second, if the "threshold objective standard is satisfied, the patentee must also demonstrate that this objectively-defined risk (determined by the record developed in the infringement proceeding) was either known or so obvious that it should have been known to the accused infringer." *Id.* The objective prong is subject to *de novo review*. *Bard Peripheral Vascular, Inc. v. W.L. Gore & Assocs.*, Inc., 682 F.3d 1003, 1005 (Fed. Cir. 2012).

The district court held here that the objective prong was not met because it concluded that the obviousness defense that Pulse presented at trial was not objectively baseless. Halo challenges that holding mainly by arguing that Pulse did not actually rely on any invalidity defense pre-suit when selling the accused products because Pulse's obviousness defense was developed after the lawsuit was filed in 2007. Halo also contends that after Pulse received Halo's notice letters in 2002, the Pulse engineer only performed a cursory review of the Halo patents and Pulse did not rely on that analysis to assess whether it was infringing a valid patent. Halo asserts that the court erred in holding that the objective prong was not met simply because Pulse raised a non-frivolous obviousness defense.

Pulse responds that the district court properly considered Pulse's post-suit obviousness defense to evaluate the objective risk of infringement of a valid patent. Pulse also responds that Pulse did not act recklessly pre-suit because Halo did not accuse Pulse of infringement in the 2002 letters and, upon receipt

of those letters, Pulse asked its engineer to review the Halo patents, who concluded that the patents were invalid in view of prior Pulse products. Pulse also maintains that its obviousness defense presented at trial raised a substantial question of invalidity and thus was objectively reasonable.

We agree with Pulse that the district court did not err in holding that the objective prong of the willfulness inquiry was not satisfied. "*Seagate's* first prong is objective, and '[t]he state of mind of the accused infringer is not relevant to this objective inquiry.'" *DePuy Spine, Inc. v. Medtronic Sofamor Danek, Inc.*, 567 F.3d 1314, 1336 (Fed. Cir. 2009) (alteration in original) (quoting Seagate, 497 F.3d at 1371). The court properly considered the totality of the record evidence, including the obviousness defense that Pulse developed during the litigation, to determine whether there was an objectively-defined risk of infringement of a valid patent.

The record shows that although Pulse was ultimately unsuccessful in challenging the validity of the Halo patents, Pulse did raise a substantial question as to the obviousness of the Halo patents. *Spine Solutions, Inc. v. Medtronic Sofamor Danek USA, Inc.*, 620 F.3d 1305, 1319 (Fed. Cir. 2010) (reversing the trial court's denial of JMOL of no willfulness because the infringer raised a substantial question as to the obviousness of the asserted patent). Pulse presented evidence that the prior art disclosed each element of the asserted claims, that it would have been predictable to combine and modify the prior art to create the claimed electronic packages, and that there were differences between the prior art considered by the PTO and the prior art introduced at trial. *See Halo*, 2013 WL 2319145, at *15 (summarizing ev-

idence presented by Pulse on obviousness). Pulse also challenged Halo's evidence of secondary considerations. *Id.*

In light of the record as a whole, we agree with the district court that Pulse's obviousness defense was not objectively unreasonable.

Accordingly, having considered all of Halo's arguments on appeal concerning willfulness and found them unpersuasive, we affirm the district court's judgment that Pulse's infringement of the Halo patents was not willful.

III. Cross-Appeal

Pulse cross-appeals from the district court's construction of the claim limitations "electronic surface mount package" in the Halo patents and "contour element" in Pulse's '963 patent and the resulting judgments of infringement of the Halo patents and noninfringement of Pulse's '963 patent. We have considered Pulse's arguments but find no reversible error in those judgments. We therefore affirm the judgment of direct infringement with respect to products that Pulse delivered in the United States and the judgment of inducement with respect to products that Pulse delivered outside the United States but ultimately were imported into the United States in finished end products, as well as the judgment of noninfringement of Pulse's '963 patent.

In addition, Pulse cross-appeals from the judgment that the asserted claims of the Halo patents were not invalid for obviousness. It is true that the record evidence indisputably shows that almost all the limitations in the asserted claims were known elements of electronic packages that existed in the

prior art. However, Pulse did not file a motion during trial under Fed. R. Civ. P 50(a) on the issue of obviousness before that issue was submitted to the jury and thus waived its right to challenge the jury's implicit factual findings underlying the nonobviousness general verdict. The district court thus correctly presumed that the jury resolved all factual disputes relating to the scope and content of the prior art and secondary considerations in Halo's favor. Based upon those presumed factual findings, the court did not err in reaching the ultimate legal conclusion that the asserted claims were not invalid for obviousness. We therefore affirm the judgment that the asserted claims of the Halo patents were not invalid for obviousness.

CONCLUSION

We have considered the parties' remaining arguments and conclude that they are without merit. For the foregoing reasons, we affirm the judgment that Pulse did not directly infringe the Halo patents by selling or offering to sell within the United States those accused products that Pulse manufactured, shipped, and delivered outside the United States. We also affirm the judgment that Pulse's infringement was not willful. On the cross-appeal, because we discern no reversible error in the contested claim constructions, we affirm the judgment of direct infringement with respect to products that Pulse delivered in the United States and the judgment of inducement with respect to products that Pulse delivered outside the United States but were imported into the United States by others, as well as the judgment of noninfringement of Pulse's '963 patent.

We also affirm the judgment that the asserted claims of the Halo patents were not shown to be invalid for obviousness.

AFFIRMED

UNITED STATES COURT OF APPEALS FOR THE FEDERAL CIRCUIT

HALO ELECTRONICS, INC.
Plaintiff-Appellant,

v.

PULSE ELECTRONICS, INC., PULSE ELECTRONICS CORPORATION,
Defendants-Appellees,

2013-1472, 2013-1656

Appeal from the United States District Court for the District of Nevada in No. 07-CV-0331, Judge Philip M. Pro.

O'MALLEY, Circuit *Judge*, concurring, with whom HUGHES, Circuit *Judge*, joins.

I agree with the majority's thoughtful conclusion that we should affirm all aspects of the district court's decision in this case. I write separately because, although we are bound by our precedent at the panel stage, I believe it is time for the full court to reevaluate our standard for the imposition of enhanced damages in light of the Supreme Court's recent decisions in *Highmark Inc. v. Allcare Health*

Management Systems, Inc., 134 S. Ct. 1744 (2014) and *Octane Fitness, LLC v. ICON Health & Fitness, Inc.*, 134 S. Ct. 1749 (2014), and the terms of the governing statutory provision, 35 U.S.C. § 284 (2012).

Our current two-prong, objective/subjective test for willful infringement set out in *In re Seagate Technology, LLC*, 497 F.3d 1360 (Fed. Cir. 2007) (en banc) is analogous to the test this court prescribed for the award of attorneys' fees under § 285 in *Brooks Furniture Manufacturing, Inc. v. Dutailier International, Inc.*, 393 F.3d 1378, 1381–82 (Fed. Cir. 2005), overruled by *Octane Fitness*, 134 S. Ct. at 1757–58. The parallel between our tests for these two issues is not surprising. Both enhanced damages and attorneys' fees are authorized under similar provisions in title 35 of the United States Code (the Patent Act of 1952). *Compare* 35 U.S.C. § 284 ("[T]he court may increase the damages up to three times the amount found or assessed.") with 35 U.S.C. § 285 ("The court in exceptional cases may award reasonable attorney fees to the prevailing party."). Although § 284 does not limit enhanced damages to "exceptional cases" as does § 285 for attorneys' fees, the Supreme Court has explained that increased damages are only available "in a case of willful or bad-faith infringement." *Aro Mfg. Co. v. Convertible Top Replacement Co.*, 377 U.S. 476, 508 (1964).

As such, our standard for the award of enhanced damages under § 284 has closely mirrored our standard for the award of attorneys' fees under § 285. *See, e.g., Bard Peripheral Vascular, Inc. v. W.L. Gore & Assocs., Inc.*, 682 F.3d 1003, 1007 (Fed. Cir. 2012) ("Our holding is consistent with similar holdings in other parallel areas of law. Our prece-

dent regarding objectively baseless claims, which allow courts to award enhanced damages and attorneys' fees under 35 U.S.C. § 285, and the Supreme Court's precedent on 'sham' litigation are instructive."); *iLOR, LLC v. Google, Inc.*, 631 F.3d 1372, 1377 (Fed. Cir. 2011) ("The objective baselessness standard for enhanced damages and attorneys' fees against a non-prevailing plaintiff under *Brooks Furniture* is identical to the objective recklessness standard for enhanced damages and attorneys' fees against an accused infringer for § 284 willful infringement actions under [*Seagate*]."). Indeed, our willfulness test, as described in *Seagate* and *Bard*, and our old § 285 test, under *Brooks Furniture*, both were predicated on our interpretation of the Supreme Court's decision in *Professional Real Estate Investors, Inc. v. Columbia Pictures Industries, Inc.* ("*PRE*"), 508 U.S. 49 (1993), which we believed required a two-step objective/ subjective inquiry before either enhanced damages or attorneys' fees could be awarded.

The Supreme Court has now told us that our reading of *PRE* was wrong. In *Octane Fitness*, the Court explained that the *PRE* standard was crafted as a very narrow exception for "sham" litigation to avoid chilling the exercise of the First Amendment right to petition the government for redress of grievances with the threat of antitrust liability. This narrow test required that a "sham" litigation be "objectively baseless" and "brought in an attempt to thwart the competition." *Octane Fitness*, 134 S. Ct. at 1757 (citing *PRE*, 508 U.S. at 60–61). In rejecting Brooks Furniture's reliance on *PRE* in the § 285 context, the Supreme Court stated that the narrow *PRE* standard "finds no roots in the text of § 285" and the chilling

effect of shifting attorney's fees is not as great as the threat of antitrust liability. *Id.* at 1757–58.

Because we now know that we were reading *PRE* too broadly, and have been told to focus on the governing statutory authorization to determine what standards should govern an award of attorneys' fees, we should reconsider whether those same interpretative errors have led us astray in our application of the authority granted to district courts under § 284. Just as "the *PRE* standard finds no roots in the text of § 285," id., there is nothing in the text of § 284 that justifies the use of the *PRE* narrow standard. In rejecting the rigid two-prong, subjective/ objective test for § 285 under *Brooks Furniture*, the Supreme Court told us to employ a flexible totality of the circumstances test. Id. at 1756. We should now assess whether a similar flexible test is appropriate for an award of enhanced damages.

The substantive test is not the only part of our willfulness jurisprudence that requires our attention. In *Octane Fitness*, the Supreme Court also rejected the requirement that patent litigants establish their entitlement to attorneys' fees under § 285 by "clear and convincing evidence." *Id.* at 1758. As we used to do for attorneys' fees, we currently require patentees to prove willfulness by clear and convincing evidence. *See Seagate*, 497 F.3d at 1371. As the Supreme Court explained in *Octane Fitness*, however, the ordinary rule in civil cases, and specifically patent infringement cases, is proof by a preponderance of the evidence. *Herman & Mclean v. Huddleston*, 459 U.S. 375, 390 (1983); *see also Octane Fitness*, 134 S. Ct. at 1758 (citing *Bene v. Jeantet*, 129 U.S. 683, 688 (1889)). In fact, other courts only require proof of willfulness by a preponderance of the evidence in

similar contexts. *E.g.*, *Fishman Transducers, Inc. v. Paul*, 685 F.3d 187, 193 (1st Cir. 2012) (holding that a preponderance of the evidence standard was appropriate to prove willfulness in a trademark infringement case); *Columbia Pictures Indus., Inc. v. Liberty Cable, Inc.*, 919 F. Supp. 985 (S.D.N.Y. 1996) (explaining that plaintiff must prove willful copyright infringement by a preponderance of the evidence). As with § 285, moreover, § 284 has no language that would justify a higher standard of proof; it just demands a simple discretionary inquiry and imposes no specific evidentiary burden. *See Octane Fitness*, 134 S. Ct. 1758. This court should evaluate whether there are any reasons to maintain a standard that is at odds with the ordinary standard in civil cases for a finding of willfulness where nothing in the statutory text even hints that we do so.

The Supreme Court also rejected de novo review of a fee award under § 285. *Highmark*, 134 S. Ct. at 1748. 'exceptional' under § 285 is a matter of discretion," which "is to be reviewed only for abuse of discretion." *Id.* Section 284 also leaves the issue of enhanced damages to the discretion of the court. *Compare* 35 U.S.C. § 284 ("[T]he court may increase the damages . . . ." (emphasis added)) with 35 U.S.C. § 285 ("The court in exceptional cases may award reasonable attorney fees to the prevailing party." (emphasis added)). Indeed, other appellate courts review similar willfulness findings with more deference. *E.g.*, *Dolman v. Agee*, 157 F.3d 708, 714–15 (9th Cir. 1998) (reviewing a finding of willful copyright infringement for clear error). As such, we must also consider whether a district court's finding of willfulness should be subject to de novo review.

Finally, under the plain language of §§ 284 and 285, "the court" is the entity that decides whether the remedy is appropriate. 35 U.S.C. § 284 ("*[T]he court* may increase the damages . . . ." (emphasis added)); 35 U.S.C. § 285 ("The court in exceptional cases may award reasonable attorney fees to the prevailing party." (emphasis added)). While we allowed the court to determine whether to award attorneys' fees under *Brooks Furniture*, we have long held that a willfulness determination contains issues of fact that should be submitted to a jury. *See Bard*, 682 F.3d at 1005 (holding that the objective prong under *Seagate* was ultimately a question of law for the court, but leaving the subjective prong as a question of fact for the jury); *see also Nat'l Presto Indus., Inc. v. West Bend Co.*, 76 F.3d 1185, 1193 (Fed. Cir. 1996) ("The issue of willful infringement remains with the trier of fact."); *Braun Inc. v. Dynamics Corp. of Am.*, 975 F.2d 815, 822 (Fed. Cir. 1992) ("Whether infringement is willful is a question of fact and the jury's determination as to willfulness is therefore reviewable under the substantial evidence standard." (citation omitted)). Although not directly addressed by the Supreme Court, when we reevaluate the proper test for an award of enhanced damages, this court should also consider whether § 284 requires a decision on enhanced damages to be made by the court. The mere presence of factual components in a discretionary inquiry does not remove that inquiry from the court to whom congress reposed it. *See Markman v. Westview Instruments, Inc.*, 52 F.3d 967, 992 (Fed. Cir. 1995), aff'd, 517 U.S. 370 (1996) ("Even within the realm of factual questions, whether a particular question must always go to a jury depends 'on whether the jury must shoulder this responsibility as

necessary to preserve the substance of common law right of trial by jury.'" (quoting Tull v. United States, 481 U.S. 412, 417 (1987))).

For the following reasons, although we are bound by *Seagate* and *Bard* as a panel, I urge the full court to reevaluate our willfulness jurisprudence in light of the Supreme Court's decisions in *Highmark* and *Octane Fitness*.

APPENDIX B

IN THE UNITED STATES DISTRICT COURT
FOR THE DISTRICT OF NEVADA

HALO ELECTRONICS, INC., Plaintiff, v. PULSE ELECTRONICS, INC. and PULSE ELECTRONICS CORPORATION, Defendants.	C.A. No. 2:07-CV-00331-PMP-PAL

ORDER

Before the Court is Defendants Pulse Electronics, Inc. and Pulse Electronics Corporation's (collectively "Pulse") Motion for Entry of Findings of Fact and Conclusions of Law Under Rule 52 (Doc. #514), filed January 11, 2013. Plaintiff Halo Electronics, Inc. ("Halo") filed a Response (Doc. #517) on January 25, 2013. Pulse filed a Reply (Doc. #518) on February 1, 2013.

This patent infringement case was tried before a jury beginning on November 6, 2012. (Mins. of Proceedings (Doc. #427).) On November 26, 2012, the jury returned a verdict finding all, except one, of Pulse's accused products directly infringed the asserted patent claims, and that Pulse induced others

to infringe the asserted patent claims with respect to all, except one, of Pulse's accused products. (Jury Verdict (Doc. #482) at 1-8.) The jury also found Halo had proven it was highly probable Pulse's infringement was willful. (Id. at 9.) The jury further found Pulse had not proven the asserted patent claims were invalid for obviousness or for failing to name all inventors. (Id. at 9-10.) Finally, the jury determined the date Halo began marking its products, a reasonable royalty rate, and an adequate amount of damages to compensate Halo for Pulse's infringement. (Id. at 11.)

The issues remaining for the Court are the legal determinations of Pulse's obviousness defense and the objective element of Halo's willfulness claim. Additionally, the Court must rule on the equitable determinations of Pulse's inequitable conduct, equitable estoppel, and laches defenses. Based upon the testimony of the witnesses at trial and other evidence in the record, the Court hereby enters the following Findings of Fact and Conclusions of Law on these remaining legal and equitable issues. The Court first addresses Pulse's obviousness, inequitable conduct, equitable estoppel, and laches defenses, and then considers Halo's willfulness claim.

I. OBVIOUSNESS

Pulse argues it has proven by clear and convincing evidence that the asserted patent claims are obvious. According to Pulse, its infringement expert demonstrated that each element of the asserted patent claims was well known in the prior art before Halo filed its patent application and that the ele-

ments were combined in a predictable way. Pulse further argues that the secondary considerations of obviousness weigh in favor of obviousness. Pulse contends the commercial success of the patented design was due to litigation-driven licenses and not the products themselves. Pulse further argues there was no long-felt need for or initial skepticism of Halo's design because Pulse had been selling the open header design that solved the problem of cracking under high pressure for years before Halo filed its patent applications. Pulse also argues there was no unexpected result because it was obvious to combine the prior art to create Halo's design. Pulse additionally asserts that the evidence of copying or acceptance by others is due only to Halo's litigation-driven licenses. Finally, Pulse contends Halo produced no evidence Halo was proceeding contrary to conventional wisdom.

Halo responds that because Pulse failed to file a pre-verdict Motion for Judgment as a Matter of Law on obviousness, Pulse waived its right to challenge the factual basis underlying the jury's implicit findings on obviousness. Halo further argues that Pulse has not proven the asserted claims were obvious. Specifically, Halo argues that after resolving all factual disputes on obviousness in Halo's favor, the result is the conclusion that the asserted patent claims are not obvious.

The ultimate question of obviousness is a question of law based on the jury's factual findings. i4i Ltd. P'ship v. Microsoft Corp., 598 F.3d 831, 845 (Fed. Cir. 2010), aff'd 131 S. Ct. 2238 (2011). "The extent to which [the Court] may review the jury's im-

plicit factual findings depends on whether a pre-verdict [Judgment as a Matter of Law] was filed on obviousness." Id. When a party fails to file a pre-verdict Motion for Judgment as a Matter of Law under Rule 50(a) on obviousness, that party waives its right to challenge the jury's factual findings on obviousness for substantial evidence. Id. When the jury makes no explicit factual findings and returns a verdict finding only that the claims were not obvious, courts presume the jury resolved the underlying factual disputes in the patentee's favor when analyzing the ultimate legal question of obviousness. Id. at 845-46; see also Jurgens v. McKasy, 927 F.2d 1552, 1558 (Fed. Cir. 1991) ("In the absence of a proper motion for directed verdict during the trial below, the sole question for review is whether the factual story told to the jury by the verdict winner (we must assume that the jury correctly believed it) supports the legal conclusion of nonobviousness.").

A patent is invalid for obviousness "if the differences between the claimed invention and the prior art are such that the claimed invention as a whole would have been obvious before the effective filing date of the claimed invention to a person having ordinary skill in the art to which the claimed invention pertains." 35 U.S.C. § 103. Thus, when a patent "simply arranges old elements with each performing the same function it had been known to perform and yields no more than one would expect from such an arrangement, the combination is obvious." KSR Int'l Co. v. Teleflex Inc., 550 U.S. 398, 417 (2007) (quotation omitted). Underlying factual considerations in an obviousness analysis include the scope and content of the prior art; teaching, suggestion, or motiva-

tion to combine elements from different prior art references; and any relevant secondary considerations. Allergan, Inc. v. Sandoz Inc., --- F.3d ----, 2013 WL 1810852, at *4 (Fed. Cir. May 1, 2013). However, although evidence of teaching, suggestion, or motivation to combine elements from different prior art references "is useful in an obviousness analysis, the overall inquiry must be expansive and flexible." Kinetic Concepts, Inc. v. Smith & Nephew, Inc., 688 F.3d 1342, 1360 (Fed. Cir. 2012). Secondary considerations of obviousness include commercial success, a long-felt but unsolved need, failure of others to solve the problem, initial skepticism, copying and praise by others, and licensing. Allergan, 2013 WL 1810852, at *4; Transocean Offshore Deepwater Drilling, Inc. v. Maersk Drilling USA, Inc., 699 F.3d 1340, 1350-54 (Fed. Cir. 2012). The defendant bears the burden of proving by clear and convincing evidence that the patent is obvious. Kinetic Concepts, 688 F.3d at 1360.

Here, the Court makes no factual findings on obviousness, which was the province of the jury, and considers only whether the jury's factual findings on obviousness show by clear and convincing evidence that the asserted patent claims were obvious. Pulse did not file a pre-verdict Motion for Judgment as a Matter of Law on obviousness, and thus waived the right to challenge the jury's factual findings on obviousness for substantial evidence. The jury found Pulse had not proven the patent claims were obvious, but returned no specific factual findings. (Jury Verdict (Doc. #482) at 9.) The Court therefore presumes the jury resolved all factual disputes in Halo's favor in considering whether the asserted patent claims were obvious.

A. The Prior Art

As to the scope of the prior art and its similarity to the asserted patent claims, Pulse introduced four prior art references at trial, Western Electric, Rockwell, Valor, and Akachi, which Pulse's infringement expert testified disclosed all of the asserted patent claim elements. Halo's infringement expert disagreed with Pulse's infringement expert's opinion regarding whether two of the prior art parts contained certain of the asserted patent claims' elements. (Jury Trial Tr. Day 9 (Doc. #468) at 246-50; Jury Trial Tr. - Day 10 (Doc. #479) at 116-23.) However, Halo's infringement expert ultimately agreed with Pulse's infringement expert that each of the elements present in the asserted patent claims also were present in the prior art, except the standoff element in claim 7 of the '985 patent and claim 48 of the '785 patent. (Halo's Opp'n to Pulse's Mot. For Entry of Findings of Fact & Conclusions of Law under Rule 52 (Doc. #517), Ex. A at 4-12.) Thus, even with the presumption that all factual disputes are resolved in favor of Halo, Pulse demonstrated that the prior art contained the elements for all but two of the asserted patent claims.

However, the fact that each of the elements of the asserted patent claims was independently present in the prior art does not in itself prove obviousness because the combination of elements within the prior art may not be obvious. See KSR Int'l, 550 U.S. at 418 ("A patent composed of several elements is not proved obvious merely by demonstrating that each of its elements was, independently, known in the prior art"). Further, the prior art relied on by Pulse at trial

was similar to the content of the prior art before the United States Patent and Trademark Office ("PTO") during the Halo patents' original prosecution and reexamination. (Jury Trial Tr. Day 9 (Doc. #468) at 229-35.) This weighs in favor of nonobviousness. See Jurgens, 927 F.2d at 1560 (finding the prior art the PTO considered was similar to the prior art the PTO did not consider when the parties disputed this fact, because the presumption of resolving all factual disputes in favor of the patentee applied).

Thus, that all the elements of the asserted claims, save two, were present in the prior art weighs in favor of obviousness. However, the fact that the PTO considered similar prior art weighs in favor of nonobviousness.

B. Motivation to Combine and Teaching Away

For motivation to combine, Pulse's infringement expert testified that it would have been obvious and logical to combine the elements of the four prior art references Pulse presented at trial to create the asserted patent claims' elements, specifically referencing the Western Electric and Akachi parts. (Jury Trial Tr. - Day 7 (Doc. #466) at 108.) Halo's infringement expert did not specifically address whether there would have been a motivation to combine the Akachi and Valor parts together or with the Western Electric or Rockwell parts. However, Halo's infringement expert testified generally that he disagreed with Pulse's infringement expert's conclusion that it would have been obvious to combine the prior art to create the asserted patent claims, and that Pulse's infringement expert was going through "a lot

of contortions to combine things." (Jury Trial Tr. - Day 9 (Doc. #468) at 251-52.) Halo's infringement expert also testified that there was nothing obvious he would have pulled from the Western Electric and Rockwell parts in defining the accused parts. (Id. at 226-[illegible].)

Additionally, a Pulse engineer testified that he did not see why the Western Electric and Rockwell parts were relevant to Pulse's accused parts.[1] (Jury Trial Tr. - day 8 (Doc. #467) at 256.) Based on this testimony by Pulse's engineer, Halo's infringement expert testified that if the Western Electric and Rockwell parts were "not relevant to someone who was on the ground at the time," the parts "can't form the basis of an obviousness combination" for that person. (Jury Trial Tr. - Day 9 (Doc. #468) at 228-29.) The jury found the accused products, except one, met the elements of the asserted patent claims. (Jury Verdict (Doc. #482) at 1-5.) Therefore, if the Western Electric and Rockwell parts were not relevant to the accused products, they were not relevant to the asserted patent claims that those products infringed, and there would be no motive to combine those parts to create the asserted patent claims. Halo presented evidence that there was no motivation to combine the prior art to create the asserted patent claims, so the Court presumes the jury resolved this fact in favor of Halo. See i4i Ltd. P'ship, 598 F.3d at 846 (finding the

---

[1] Pulse argues that this witness was not giving opinion testimony regarding obviousness. However, the Court must resolve all factual disputes in favor of Halo, and this evidence supports Halo's contention that the prior art does not show the asserted patent claims are obvious.

presumption that the jury resolved factual disputes in favor of the patentee applies to disputes about the existence of motivation to modify prior art references). Therefore, the evidence on motivation to combine the prior art to create the patented design weighs in favor of nonobviousness.

As to whether the prior art taught away from the asserted patent claims, Halo's infringement expert testified that "the work that other people were doing, the solutions that they were pursuing" was "that they were working on other things." (Jury Trial Tr. - Day 9 (Doc. #468) at 258.) Halo's infringement expert also testified that Pulse was "working on different things as opposed to the solution that ultimately was determined." (Id. at 258-59.) Therefore, presuming the jury resolved this factual issue in favor of Halo, the prior art taught away from the Halo patents. See Spectralytics, Inc. v. Cordis Corp., 649 F.3d 1336, 1343 (Fed. Cir. 2011) ("Whether the prior art teaches away from the claimed invention is a question of fact."). Consequently, teaching away also weighs in favor of nonobviousness.

C. Objective Factors of Obviousness

1. Commercial Success

Pulse argues that the commercial success of its accused products was not due to the patented design. Pulse's Director of Marketing testified there were cases where customers preferred open header or transfer molded, but the majority of customers had no preference and made a decision based on cost. (Jury Trial Tr. Day 7 (Doc. #466) at 318-20.) Pulse presented evidence that the costs for open header

parts and transfer molded parts were similar, but sometimes one type could be more expensive than the other. (Id. at 326-27.)

However, Halo presented evidence of the accused products' commercial success, and the accused products embodied Halo's invention. (Jury Trial Tr. - Day 8 (Doc. #467), at 186 (Pulse did "$250 million worth of sales 10 over ten years" of the accused products); Jury Trial Tr. Day 9, at 256 (once Pulse "began to ship accused parts, they shipped $257,000,000 worth of accused parts").) Therefore, Halo triggered the presumption that the commercial success of the accused products is due to Halo's patented invention. See J.T. Eaton & Co. v. Atl. Paste & Glue Co., 106 F.3d 1563, 1571 (Fed. Cir. 1997) ("When a patentee can demonstrate commercial success, usually shown by significant sales in a relevant market, and that the successful product is the invention disclosed and claimed in the patent, it is presumed that the commercial success is due to the patented invention."); Brown & Williamson Tobacco Corp. v. Philip Morris Inc., 229 F.3d 1120, 1130 (Fed. Cir. 2000) ("[I]f the marketed product embodies the claimed features, and is coextensive with them, then a nexus is presumed and the burden shifts to the party asserting obviousness"). The factual dispute over the reason for the accused products' commercial success must be resolved in favor of Halo, and thus the commercial success of the accused products weighs in favor of nonobviousness.

2. Solving Long-Standing Problem

Pulse presented evidence that Halo's invention did not solve the long-standing problem of transfer

molded parts cracking at high temperatures and that others in the industry had failed to solve this problem. Specifically, Pulse presented evidence that in 1986 Pulse was selling an open bottom surface-mount transformer that could withstand a 250 degree Celsius heating process without cracking. (Jury Trial Tr. Day 6 (Doc. #465) at 227-28.) However, Halo's infringement expert testified that people in the industry knew about the cracking problem for years, at least as far back as the 1980's. (Jury Trial Tr. - Day 9 (Doc. #468), at 256-57.) Halo's infringement expert also testified that "all of the solutions, except the one proposed by Halo, failed." (Id. at 257.) The Court must presume the jury resolved this factual dispute in Halo's favor. Therefore, the factors of a long-felt but unmet need and the failure of others to solve the problem weigh in favor of nonobviousness.

3. Initial Skepticism

Pulse argues that the one instance of skepticism of Halo's invention in the industry is not enough to sway this factor in favor of Halo. Halo's Vice President and Chief Operating Officer testified that when Halo sent Hewlett Packard samples of Halo's patented surface mount transformers, Hewlett Packard was skeptical that the design would work. (Jury Trial Tr. - Day 2 (Doc. #435) at 6-7, 62.) Halo's infringement expert testified that Hewlett Packard's skepticism demonstrated initial skepticism for obviousness purposes. (Jury Trial Tr. Day 9 (Doc. #468) at 257-58.) Pulse is challenging the sufficiency of the evidence supporting skepticism, an argument which Pulse waived by failing to file a Rule 50(a) Motion on

obviousness. Therefore, the skepticism factor weighs in favor of nonobviousness.

4. Copying by Others

Pulse argues that the factor of copying by others weighs in favor of obviousness. Pulse argues that it did not copy the patented design because although it began making some open header surface-mount products after Halo patented its design, it continued to sell non-accused products, such as transfer molded surface-mount transformers. However, that Pulse did not fully move its product line from transfer molded parts to open-header parts does not change the fact that Pulse switched part of its product line to Halo's patented design after Halo patented its design, which supports an inference of copying. (Jury Trial Tr. - Day 5 (Doc. #464) at 147-48, 244.) And in any event, Halo presented evidence that Halo's patented design was copied by others in the industry.[2] Halo's Vice President of Global Sales, testified that the open construction design of Halo's patented invention was unique at first, but has since become "more common place" because some of Halo's competitors now use the open construction design. (Jury Trial Tr. Day 4 (Doc. #442) at 292.) Thus, presuming the jury resolved this factual dispute in Halo's favor, this factor weighs in favor of nonobviousness.

---

[2] Halo also argues it presented evidence the patented invention was praised, but gives no record support showing praise. Evidence that the invention was copied could support an inference that the patented design was praised. However, notwithstanding this inference, even if the Court weighed this one factor in favor of obviousness, Pulse still has not shown obviousness by clear and convincing evidence.

5. Licensing of the Patented Invention

Pulse argues that this factor weighs in favor of nonobviousness because Halo's licenses to four of Halo and Pulse's competitors for use of Halo's patented design were primarily the result of litigation. Pulse argues this is demonstrated by the testimony that one of these competitors entered into the licensing agreement to settle the lawsuit Halo had brought against the competitor. (Jury Trial Tr. Day 8 (Doc. #467) at 160-61.) However, Halo's damages expert testified that these licenses provided evidence of the value of the patents. (Jury Trial Tr. - Day 5 (Doc. #464) at 92-94.) Resolving this factual dispute in favor of Halo, the licenses provide evidence that Halo's competitors valued the claimed invention enough to pay for its use. See Transocean, 699 F.3d at 1353 (finding that, when confronted with conflicting evidence about the motivation behind licensing agreements, "a reasonable jury could have found that the licenses reflect the value of the claimed invention and are not solely attributable to litigation"). The licensing of the patented invention thus weighs in favor of obviousness.

In summary, presuming the jury resolved all factual disputes in Halo's favor, Pulse has not met its burden to show obviousness by clear and convincing evidence. It is undisputed that between the four prior art references presented by Pulse at trial, all of the claimed elements, except the standoff element in claim 7 of the '985 patent and claim 48 of the '785 patent, were present in the prior art. However, the rest of the factors weigh in favor of Halo: the PTO

considered prior art which contained the same concepts as in the prior art Pulse presented at trial, there was no motivation to combine the specific elements to make the asserted patent claims, the prior art taught away from Halo's design. Further, Halo's patented design was commercially successful, solved a long-standing problem, was initially received with skepticism, was copied by others, and was licensed to competitors. Therefore, the Court finds that based upon the jury's presumed factual findings the asserted patent claims were not obvious.

Even without the presumption that all factual disputes are resolved in Halo's favor, Pulse has not proven obviousness by clear and convincing evidence. While Pulse presented evidence of obviousness in the form of its infringement expert's opinion testimony and lay witness testimony, Halo presented countervailing evidence of nonobviousness. Thus, considering all of the evidence on obviousness from both parties, Pulse has not proven obviousness by clear and convincing evidence. The Court therefore finds the asserted patent claims are not invalid for obviousness.

II. INEQUITABLE CONDUCT

Pulse argues that Halo committed inequitable conduct before the PTO by not naming T. K. Luk ("Luk"), a former employee of a manufacturing company that worked with Halo, as an inventor of the Halo patented designs. Pulse asserts Luk was an inventor based on his testimony stating he invented the patented design, as well as a fax which shows Luk was involved in the conception of the invention.

Pulse argues that a failure to name all inventors renders a patent invalid, and therefore this was material information that should have been presented to the PTO. Pulse further contends Halo's specific intent to deceive the PTO can be inferred from the fact that the named inventors knew of Luk's contributions to the inventions and failed to name him as an inventor. Pulse also argues that specific intent to exclude Luk may be inferred from the fact that Luk left the company that worked with Halo and joined a competing company right before the first Halo patent was filed, and therefore it would have been more difficult to get a patent application filed if Luk were included in the process.

Halo responds that information relating to Luk was not material because the evidence shows Luk was not an inventor. Halo argues that this defense comes down to a credibility dispute between Luk and three of the named inventors who testified Luk was not involved in the conception of the invention. Halo further argues that Luk's testimony is implausible and undermined when compared to the named inventors' testimony. According to Halo Luk was biased against Halo because he created fake documents altering the dates of certain engineering changes to support his new employer's summary judgment motion in another lawsuit with Halo. Halo also contends that the documents Pulse offers to corroborate Luk's testimony are insufficient because one document shows only the latest date the design was conceived, and the other is an e-mail created by Luk after the named inventors filed the patent application. Halo finally argues that Pulse cannot prove specific intent to deceive the PTO because the only

proper inference that can be drawn from the facts is that the named inventors did not mention Luk because he was not an inventor.

"Patent applicants have a duty to prosecute patent applications in the Patent Office with candor, good faith, and honesty." Symantec Corp. v. Computer Assocs. Int'l, Inc., 522 F.3d 1279, 1296 (Fed. Cir. 2008) (quotation omitted). "A breach of this duty constitutes inequitable conduct and renders the entire patent unenforceable." Id. To prevail on a claim of inequitable conduct, the accused infringer must prove by clear and convincing evidence that the applicant (1) knew the information was material and (2) made a deliberate decision to withhold the information to deceive the PTO. Therasense, Inc. v. Becton, Dickinson & Co., 649 F.3d 1276, 1290 (Fed. Cir. 2011) ("To prevail on a claim of inequitable conduct, the accused infringer must prove that the patentee acted with the specific intent to deceive the PTO.").

As to the first element, generally, "the materiality required to establish inequitable conduct is but-for materiality." Id. at 1291. However, there is an exception for "affirmative acts of egregious misconduct, such as the filing of an unmistakably false affidavit," which are always considered material. Id. at 1292. For example, the identity and disclosure of all inventors is a material fact that would affect whether the PTO would allow the claim. See PerSeptive Biosystems, Inc. v. Pharmacia Biotech, Inc., 225 F.3d 1315, 1321 (Fed. Cir. 2000) ("As a critical requirement for obtaining a patent, inventorship is material."); 35 U.S.C. § 115 ("An application for patent . . . shall include, or be amended to include, the name of the in-

ventor for any invention claimed in the application."). A party asserting prior or co-inventorship must proffer evidence corroborating the testimony of the prior or coinventor. Singh v. Brake, 317 F.3d 1334, 1340-41 (Fed. Cir. 2003). "[W]hether a putative inventor's testimony has been sufficiently corroborated is determined by a rule of reason analysis, in which an evaluation of all pertinent evidence must be made so that a sound determination of the credibility of the inventor's story may be reached." Id. at 1341. Corroborating evidence may take many forms, such as "records made contemporaneously with the inventive process," or "circumstantial evidence of an independent nature." Gemstar-TV Guide Int'l, Inc. v. Int'l Trade Comm'n, 383 F.3d 1352, 1382 (Fed. Cir. 2004).

For the second element of inequitable conduct, "to meet the clear and convincing evidence standard, the specific intent to deceive must be the single most reasonable inference able to be drawn from the evidence." Therasense, 649 F.3d at 1290 (quotation omitted). "Indeed, the evidence must be sufficient to require a finding of deceitful intent in the light of all the circumstances." Id. at 1290 (quotation and emphasis omitted). Thus, "when there are multiple reasonable inferences that may be drawn, intent to deceive cannot be found." Id. at 1290-91. Even if the accused infringer proves the elements of inequitable conduct by clear and convincing evidence, "[t]he ultimate determination of inequitable conduct is committed to the sound discretion of the trial court." Dippin' Dots, Inc. v. Mosey, 476 F.3d 1337, 1345 (Fed. Cir. 2007).

Here, Pulse argues that a preponderance of the evidence standard should apply, stating that the issue is "whether the PTO would have rejected the claims based on the nondisclosure of Mr. Luk, which is addressed under the preponderance of the evidence standard." (Pulse's Reply in Support of Def.'s Mot. For Entry of Findings of Fact & Conclusions of Law (Doc. #518) at 12-13 (emphasis omitted).) The preponderance of the evidence standard applies in the determination of but-for materiality for failure to disclose prior art to the PTO. Therasense, 649 F.3d at 1291-92 (stating courts must apply the preponderance of the evidence standard when determining "whether the PTO would have allowed the claim if it had been aware of the undisclosed reference"); see also Manual of Patent Examining Procedure § 706 ("an examiner should reject a claim if, in view of the prior art and evidence of record, it is more likely than not that the claim is unpatentable"). As explained previously, however, inventorship is material, and therefore this preponderance of the evidence standard does not apply because a patent would not be issued if all of the inventors were not named on the application. Thus, the issue here is whether Pulse has shown Luk was an inventor that needed to be disclosed, which Pulse must prove by clear and convincing evidence. Even assuming Pulse needs to show this by only a preponderance of the evidence, Pulse has not met its burden to show Luk was an inventor that should have been disclosed.

Luk testified that he was the inventor of the patented design. (Jury Trial Tr. - Day 8 (Doc. #467) at 99, 103-05, 114 (Luk testifying that "[s]ome or all of the inventions claimed in the Halo patents were

derived from work in which I was involved" and that he could not believe he was not named on the patents because "this is my design").) Luk testified that he came up with the open header design to solve the cracking problem, he drew up the sketch on a white-board in his engineering room, and he conveyed his idea to his engineers. (Id. at 102-03.)

However, Pulse failed to sufficiently corroborate Luk's testimony. Pulse argues that a fax between Luk and the named inventors contains the only evidence of conception of Halo's claimed invention and shows Luk was involved as an inventor. (Jury Trial Tr. – Day 2 (Doc. #435) at 50-57, 162-63, 169; Pl.'s Trial Ex. 123.) However, this fax does not corroborate Luk's testimony because it merely indicates Luk and Halo's President engaged in fax communications containing a drawing of the patented design. (Pl.'s Trial Ex. 123.) Furthermore, three of the six named inventors who testified at the trial explained that the drawing on the fax is what would have been sent to a tool manufacturer to make the mold for the product, or a "tooling drawing." (Jury Trial Tr. - Day 2 (Doc. #435) at 50, 237; Jury Trial Tr. Day 4 (Doc. #442) at 207-08.) They further testified that Luk would have been sent the tooling drawing because he was in charge of manufacturing parts and would have needed the new design for manufacturing purposes, not because he was involved in the design process. (Jury Trial Tr. - Day 2 (Doc. #435) at 52, 56, 240-41; Jury Trial Tr. Day 4 (Doc. #442) at 207-09.) This testimony undermines Pulse's claims that Luk's name appearing on the fax shows he was involved in the designing process, to the extent that the fax pro-

vides any corroboration for Luk's assertion that he was an inventor.

Pulse also argues an e-mail sent by Luk in 1996 corroborates his testimony that he was an inventor. (Def.'s Trial Ex. 540.) Luk sent the e-mail to his supervisor at the company he went to work for after Halo. (Id.) In the e-mail, Luk expressed that he felt upset about being informed that Halo had warned that it would sue Luk's new employer if they continued to use Halo's patented design because Luk was the "only one to design this SMD case when I was in PBL/Halo and today I was told I could not use this design even with my own tooling." (Id.) However, this e-mail also does not corroborate Luk's testimony that he was an inventor because it was Luk's own statement made after the invention was completed in reaction to a threat of a lawsuit. See Singh, 317 F.3d at 1340-41 ("Evidence of the inventive facts must not rest alone on the testimony of the inventor himself.").

Furthermore, three of the named inventors testified at trial that Luk was not an inventor of Halo's patented design and did not contribute at all to the ideas that became the Halo patents. (Jury Trial Tr. Day 2 (Doc. #435) at 57, 193-94, 240-41; Jury Trial Tr. Day 4 (Doc. #442) at 209.) These three named inventors also testified that the conception of the invention occurred during multiple "brainstorming sessions" that occurred over the course of several months, which included only the six inventors named on the patents. (Jury Trial Tr. - Day 2 (Doc. #435) at 35-39, 221-30; Jury Trial Tr. Day 4 (Doc. #442) at 203-07.) Each of the three named inventors who tes-

tified told consistent stories about the conception process and who was involved.

Halo also presented an e-mail from Luk, for the limited purpose of showing Luk's bias against Halo, which stated Luk would ask a co-worker to "make some fake documents" in response to his current employer's request for documents relating to a lawsuit between his current employer and Halo. (Jury Trial Tr. Day 8 (Doc. #467) at 49, 152; Pl.'s Trial Exs. 413, 414). Thus, based on the lack of evidence corroborating Luk's testimony, as well as the evidence of Luk's bias against Halo, Pulse has not proven, by clear and convincing evidence or a preponderance of the evidence, that Luk was an inventor. Therefore, the named inventor's failure to name Luk as an inventor was not material.

Because Pulse has not met its burden to show failing to name Luk as an inventor was material, Pulse also has failed to meet its burden to show Halo specifically intended to deceive the PTO by not including Luk as an inventor. The Court therefore finds Pulse has failed to prove Halo committed inequitable conduct in not naming Luk as an inventor.

III. EQUITABLE ESTOPPEL

Pulse argues that Halo should be estopped from enforcing its patents against Pulse because its conduct misled Pulse to reasonably believe Halo did not intend to enforce its patents against Pulse, resulting in prejudice to Pulse. Pulse argues that Halo's President testified he believed Pulse infringed at the time Halo sent Pulse letters in 2002 about

Pulse's accused products and Halo's patents. However, the letters contained no allegations of infringement, which Pulse argues misled it into believing Halo did not intend to assert a claim of infringement. Pulse also argues it relied on Halo's misleading conduct because after receiving the letter and before Halo brought suit, Pulse developed, marketed, and sold millions of dollars' worth of accused products. Pulse also asserts it would have brought a declaratory judgment action against Halo it if knew Halo was going to assert an infringement suit. Pulse additionally argues it has suffered evidentiary prejudice because of the death of a key witness, as well as economic prejudice because Halo deliberately delayed bringing suit to increase its damages.

Halo responds that Pulse has not proven Halo misled Pulse to believe Halo did not intend to enforce its patents because the 2002 letters would lead a reasonable person to believe Halo was enforcing its patent rights through attempted licensing. Halo argues Pulse fails to prove reliance because no Pulse witness testified that Pulse made the decision to continue selling the accused products based on the letters. Halo further submits Pulse's contention at trial that it continued to sell the accused products after it had done an internal invalidity analysis is inconsistent with reliance on the letters and Halo's silence, and therefore undermines any argument in favor of reliance. Halo also contends Pulse's assertion that it would have instituted a declaratory judgment action if it would have known Halo was going to allege infringement is speculation unsupported by the evidence. Finally, Halo argues Pulse cannot prove either evidentiary prejudice because the death of the

witness occurred after Halo filed suit, or economic prejudice because Pulse did not stop selling the accused products when this lawsuit was filed and Pulse opposes a permanent injunction that would force Pulse to switch to an alternative design.

"Equitable estoppel is an equitable defense to infringement and may serve as an absolute bar to a patentee's claim of infringement." Scholle Corp. v. Blackhawk Molding Co., 133 F.3d 1469, 1471 (Fed. Cir. 1998). To support a defense of equitable estoppel in the patent context, a defendant must show (1) "the patentee, through misleading conduct, led the alleged infringer to reasonably believe that the patentee did not intend to enforce its patent against the infringer," (2) the alleged infringer relied on the patentee's misleading conduct, and (3) "due to its reliance, the alleged infringer would be materially prejudiced if the patentee were permitted to proceed with its charge of infringement." Aspex Eyewear Inc. v. Clariti Eyewear, Inc., 605 F.3d 1305, 1310 (Fed. Cir. 2010). The preponderance of the evidence standard applies, "absent special circumstances, such as fraud or intentional misconduct." A.C. Aukerman Co. v. R.L. Chaides Constr. Co., 960 F.2d 1020, 1046 (Fed. Cir. 1992).

As to the first element, "[m]isleading conduct may include specific statements, action, inaction, or silence when there was an obligation to speak." Aspex, 605 F.3d at 1310 (quotation marks omitted). However, the patentee's inaction "must be combined with other facts respecting the relationship or contacts between the parties to give rise to the necessary inference that the claim against the defendant

is abandoned." Aukerman, 960 F.2d at 1042. For example, a party threatening immediate or vigorous enforcement of its patent rights then delaying its claim for an unreasonably long time may be estopped from pursuing its claim. Meyers v. Asics Corp., 974 F.2d 1304, 1309 (Fed. Cir. 1992). But "a suggestion of infringement coupled with an offer to license followed by silence" is probably insufficient to establish misleading conduct for estoppel purposes. Id. at 1308. (quotation omitted).

Secondly, an alleged infringer ignoring or giving little weight to a patentee's offer to negotiate licenses may be evidence that the alleged infringer did not rely on the patentee's conduct. Id. at 1309. The accused infringer must show "it substantially relied on the misleading conduct of the patentee in connection with taking some action." Aukerman, 960 F.2d at 1042-43. Essentially, "the infringer must have had a relationship or communication with the plaintiff which lulls the infringer into a sense of security in going ahead with [its infringing conduct]." Id. at 1043.

As to the final element, prejudice can be evidentiary or economic. Id. Evidentiary prejudice arises when key witnesses or documentary evidence is lost or witnesses' memories lessen because of the plaintiff's unreasonable delay. Meyers, 974 F.2d at 1308. Economic prejudice "may be shown by a change of economic position flowing from actions taken or not taken by the patentee." Aspex, 605 F.3d at 1312. However, the alleged infringer must prove that any increased expenditure is related to the actions taken by the patentee, and not merely a business decision.

Gasser Chair Co. v. Infanti Chair Mfg. Corp., 60 F.3d 770, 774 (Fed. Cir. 1995).

Whether to apply equitable estoppel is committed to the sound discretion of the trial court. Aukerman, 960 F.2d at 1041. When "deciding whether to bar the suit on estoppel grounds, the court must consider all evidence relevant to the equities." Aspex, 605 F.3d at 1310. "[E]quitable estoppel is not limited to a particular factual situation nor subject to resolution by simple or hard and fast rules." Aukerman, 960 F.2d at 1041.

Here, Pulse has not shown misleading conduct by Halo. The first letter Halo's attorneys sent to Pulse in 2002 informed Pulse that Halo had surface mount packaging patents, stated "Halo is interested in licensing these patents, and would like to solicit your company's interest in entering into negotiations for the license of these patented technologies," and requested an answer from Pulse by the end of the month. (Pl.'s Trial Ex. 91.) The second letter, sent one month later, states that there "is reason to believe" Pulse is manufacturing products that "may possess features similar to those embodied in [Halo's patents]," that Halo had not reached "any conclusive determinations" as to whether Pulse was infringing, but rather was "devoting its energy to working out suitable arrangements with companies that would benefit from licensing Halo's patented technologies," such as Pulse. (Pl.'s Trial Ex. 92.) Neither of these letters threaten immediate or vigorous enforcement of Halo's patents, or even affirmatively allege infringement. Thus, Halo's silence after sending the second letter, at least until suit was brought, does

not establish misleading conduct by Halo that demonstrated to Pulse that Halo was abandoning a potential claim of infringement. See Meyers, 974 F.2d at 1305-06, 1309 (finding a letter that was an invitation to enter into a business relationship and did not threaten litigation or communicate acquiescence to the infringement, combined with silence until the patentee filed suit, was not misleading conduct).

Pulse's contention that Halo believed that Pulse infringed at the time Halo's attorney sent the letters but did not say so in the letters does not show misleading conduct. Halo's President testified that at the time Halo's attorney sent the 2002 letters he believed that Pulse was infringing the Halo patents. (Jury Trial Tr. - Day 4 (Doc. #442) at 259.) However, Pulse has presented no evidence that Pulse was aware of this fact prior to the commencement of this litigation, and thus Pulse could not have been misled by Halo's belief that Pulse did in fact infringe.

Additionally, Pulse's argument that the letters may show Halo had decided Pulse did not infringe also does not show misleading conduct. Pulse's Chief Operating Officer testified that the second letter may suggest Halo performed an infringement analysis and determined that Pulse did not infringe. (Jury Trial Tr. Day 6 (Doc. #465) at 48.) However, the standard for misleading conduct in a case where there is communication and then silence is not whether the conduct was ambiguous, but whether the conduct threatened immediate or vigorous enforcement of an infringement claim followed by a long period of silence that indicated the patentee

would not be enforcing the claim. Meyers, 974 F.2d at 1309. Thus, based on the two letters, which contained no accusation of infringement, followed by Halo's silence, it was not reasonable for Pulse to infer that Halo did not intend to enforce its patents against Pulse. Pulse has not established that Halo's conduct misled Pulse, and therefore Pulse cannot prove equitable estoppel. The Court finds Pulse has not proven Halo should be equitably estopped.

IV. LACHES

Pulse argues that under the doctrine of laches the Court should bar relief for any damages that occurred before this litigation commenced. Pulse argues that the evidence demonstrates Halo delayed bringing suit for an unreasonable and inexcusable amount of time after Halo knew or should have known of its claims against Pulse. Pulse argues that Halo's purpose in delaying was to accrue a higher amount of damages. Pulse also argues it suffered material economic and evidentiary prejudice as a result of that delay.

Halo responds that Halo's four and a half year delay was not unreasonable given the circumstances. Particularly, Halo had sent letters to several potential infringers and was taking steps to enforce its claims of infringement by filing suit against one company in 2003. Halo also argues that the terminal illness and death of Halo's President's wife interrupted Halo's infringement suits, and once Halo resumed its enforcement actions it took a while to find proper counsel and file suit against Pulse. Halo finally argues Pulse suffered no prejudice for the same

reasons as it did not suffer prejudice under equitable estoppel.

"The application of the defense of laches is committed to the sound discretion of the district court." Aukerman, 960 F.2d at 1032. To prove laches, a defendant must show that the plaintiff delayed filing suit for an "unreasonable and inexcusable length of time after the plaintiff knew or reasonably should have known of its claim against the defendant; and . . . the delay resulted in material prejudice or injury to the defendant." Wanlass v. Gen. Elec. Co., 148 F.3d 1334, 1337 (Fed. Cir. 1998) (quotation omitted).

"The length of time which may be deemed unreasonable has no fixed boundaries but rather depends on the circumstances." Aukerman, 960 F.2d at 1032. Generally, "[t]he Circuit has pronounced a three or four-year delay unreasonable only when that delay was accompanied by extraneous improper tactics or misleading conduct by the plaintiff." IXYS Corp. v. Advanced Power Tech., Inc., 321 F. Supp. 2d 1156, 1163 (N.D. Cal. 2004) (citing MCV, Inc. v. King-Seeley Thermos Co., 879 F.2d 1568, 1572 (Fed. Cir. 1989); Rosemount, Inc. v. Beckman Instruments, Inc., 727 F.2d 1540, 1550 (Fed. Cir. 1984)). For example, a plaintiff co-inventor telling a patentee that he had no interest in possessing rights in the patent, then later bringing suit to be named on the patent was misleading conduct. MCV, 879 F.2d at 1572. A delay of more than six years raises a presumption that the delay is unreasonable. Wanlass, 148 F.3d at 1337. Material prejudice may be established by showing economic or evidentiary prejudice. Id.

Pulse does not argue the six year presumption applies, and the Court finds no evidence to show Halo knew or should have known of Pulse's infringement more than six years before Halo filed suit against Pulse. Id. ("The period of delay begins at the time the patentee has actual or constructive knowledge of the defendant's potentially infringing activities.") Thus, the burden rests on Pulse to prove Halo's delay was unreasonable and inexcusable and that Pulse suffered material prejudice as a result of that delay.

Pulse has not shown that Halo delayed filing suit for an unreasonable and inexcusable length of time. Halo accused multiple companies of infringement, and addressed each infringer one by one. Furthermore, Halo's President's wife fell terminally ill soon after Halo began its patent enforcement activities in 2003, and passed away in 2005, which further shows Halo's delay was reasonable given that Halo is a small company. (Jury Trial Tr. Day 4 (Doc. #442) at 264-65.) Finally, Halo's President credibly testified that after his wife passed away and he resumed running Halo, it took a couple of years to find a lawyer who would take the case on contingency, which further explains Halo's delay in bringing suit. (Id. at 263.)

Pulse argues that Halo delayed suit because it knew it could not get damages, as demonstrated by an e-mail sent from Halo's President to Halo's Vice President and engineer. This e-mail, referred to by Pulse as Defendant's Trial Exhibit 588, was not admitted at trial and is not included in the Motions now before the Court. However, even if the e-mail

were properly before the Court, its does not demonstrate Halo's delay was unreasonable and inexcusable, or for an improper purpose. While this e-mail may show Halo may have had an incentive to wait and file suit after damages accrued, the weight of the evidence shows that Halo had legitimate and reasonable justifications for not bringing suit earlier. The Court therefore finds Pulse has not proven that laches should bar Halo relief for damages that occurred before Halo filed suit.

V. WILLFULNESS

Halo argues it has shown by clear and convincing evidence that Pulse willfully infringed. Halo argues that many of Pulse's defenses were disposed of on summary judgment or have been abandoned, and that the defenses Pulse relied on at trial were unreasonable. Therefore, Halo concludes that Pulse acted despite an objectively high risk that it was infringing, and thus acted willfully. Pulse responds that because there were triable issues as to both invalidity and infringement, Halo cannot prove willful infringement. Pulse argues that it consistently relied on its reasonable defense of invalidity for obviousness, which was not a sham defense.

To prove willfulness, the patentee must prove by clear and convincing evidence both an objective and subjective element of willfulness. Bard Peripheral Vascular, Inc. v. W.L. Gore & Assoc., Inc., 682 F.3d 1003, 1005 (Fed. Cir. 2012). The first prong is objective recklessness, which is a threshold inquiry decided by the Court as a question of law. Id. at 1007-08. To prove objective recklessness, the patent-

ee must show "by clear and convincing evidence that the infringer acted despite an objectively high likelihood that its actions constituted infringement of a valid patent." Id. at 1005. The determination of objective recklessness "entails an objective assessment of potential defenses based on the risk presented by the patent." Id. at 1006. Thus, the objective recklessness prong "tends not to be met where an accused infringer relies on a reasonable defense to a charge of infringement." Spine Solutions, Inc. v. Medtronic Sofamor Danek USA, Inc., 620 F.3d 1305, 1319 (Fed. Cir. 2010); Uniloc USA, Inc. v. Microsoft Corp., 632 F.3d 1292, 1310 (Fed. Cir. 2011) (noting if an accused infringer's position "is susceptible to a reasonable conclusion of no infringement," then the objective prong of willfulness is not met). Whether a defense is reasonable is a legal issue for the Court, even when the jury decides the underlying factual questions, such as for obviousness.[3] Bard, 682 F.3d at 1007.

If the Court determines the asserted patent defenses were not reasonable, and therefore there was an objectively high risk of infringement, the Court reviews a jury's subjective willfulness finding for substantial evidence. Power Integrations, Inc. v. Fairchild Semiconductor Int'l, Inc., 711 F.3d 1348,

---

[3] Halo argues that Pulse failed to file a Rule 50(a) Motion on the subjective element of willfulness and therefore the Court must resolve all factual issues on willfulness in favor of Halo. However, the Court determines the reasonableness of the defenses in light of all of the evidence, and is not bound by the factual findings of the jury for the objective determination of willfulness. Bard, 682 F.3d at 1007-08.

1357 (Fed. Cir. 2013). The patentee must demonstrate that "this objectively-defined risk . . . was either known or so obvious that it should have been known to the accused infringer." Bard, 682 F.3d at 1006 (quotation omitted). However, if there is no objectively high risk of infringement, there can be no willful infringement, even if the jury found the subjective prong was met. Spine Solutions, 620 F.3d at 1319.

Here, Halo has not proven by clear and convincing evidence that Pulse acted despite an objectively high risk of infringement. Halo argues the evidence at trial demonstrates that Pulse acted objectively recklessly, citing the Court's grant of summary judgment in favor of Halo finding the H0022 group of Pulse's accused parts infringed claim 1 of the '720 patent, Pulse's infringement expert's testimony that he was not offering non-infringement defenses for certain product groups and claims, and a Pulse representative's concession that if the patents were found valid then Pulse would be infringing certain claims. (Order (Doc. #300) at 51; Jury Trial Tr. - Day 7 (Doc. #466) at 204-05; Jury Trial Tr. - Day 8 (Doc. #467) at 16.) Halo further argues the fact that some of Pulse's defenses were disposed of on summary judgment, such as Pulse's invalidity defense under the "on-sale" bar of 35 U.S.C. § 102(b), is strong evidence of objective recklessness. (Order (Doc. #300) at 25-30.)

However, even though Pulse conceded infringement of some claims and some of Pulse's defenses failed at summary judgment, Pulse also asserted and consistently relied on defenses that ulti-

mately were presented at trial, including its defense of invalidity for obviousness. (Jury Verdict at 9-10.) Although the jury ultimately rejected all of Pulse's defenses, Pulse reasonably relied on at least its obviousness defense. (Id.) Pulse's evidence on obviousness consisted of its infringement expert's testimony that the prior art disclosed each element of the asserted patent claims, that it would have been obvious and predictable to combine and modify the prior art references to create the asserted patent claims, and that there were differences between the prior art before the PTO and the prior art Pulse introduced at trial. Pulse also presented evidence of the secondary considerations of obviousness, such as that the commercial success of the patented design was tied to litigation-driven licenses, that there was only a single instance of skepticism by one of Halo's potential customers, and that Pulse already had solved the problem of cracking due to exposure to high heat years before the Halo invention.

Pulse did not prove obviousness by clear and convincing evidence, but presented enough evidence of obviousness such that this defense was not objectively baseless, or a "sham." See Bard, 682 F.3d at 1007 (stating that a suit is a sham if it was "objectively baseless in the sense that no reasonable litigant could realistically expect success on the merits"). Pulse reasonably relied on its obviousness defense, and it did not act in the face of an objectively high likelihood that Pulse was infringing. See Spine Solutions, 620 F.3d at 1319 (finding, despite the jury's implicit finding that one of skill in the art would not have found the combination obvious based on the prior art, that the infringer raised a substantial

question as to obviousness and therefore was not objectively reckless in relying on that ultimately unsuccessful defense).

Halo argues Pulse's actions demonstrate objective recklessness. Halo submits that Pulse learned of Halo's patents as early as 1998, but did nothing to determine whether Pulse was infringing the patents. Halo further contends that after receiving Halo's letters in 2002, Pulse did not make a conscious decision that it was permissible for Pulse to continue selling the accused products. Halo argues that although a Pulse engineer conducted a "cursory" invalidity analysis and determined the patents were invalid, there was no evidence that a decision maker at Pulse relied on that engineer's analysis to make a decision to continue selling the accused products. This evidence, however, does not undermine Pulse's reasonable obviousness defense, and are facts relevant to the subjective element of infringement.

Halo has not proven by clear and convincing evidence that Pulse acted despite an objectively high likelihood that its actions constituted infringement of a valid patent. Therefore, the Court finds in favor of Pulse on willfulness, and concludes that Pulse did not willfully infringe Halo's asserted patent claims.

VI. CONCLUSION

Pulse has not met its burden to prove the asserted patent claims are obvious. Pulse also has not met its burden to show Halo committed inequitable conduct before the PTO, that Halo should be equitably estopped from enforcing the claims, or that Halo

should be barred under laches from collecting damages incurred prior to the filing of this lawsuit. Similarly, Halo has not met its burden to show Pulse willfully infringed the asserted patent claims. The Court therefore finds that Judgment should be entered in favor of Halo and against Pulse, with the exception of the issue of willfulness.

IT IS SO ORDERED.

DATED: May 28, 2013

PHILIP M. PRO
United States District
Judge

APPENDIX C

IN THE UNITED STATES DISTRICT COURT
FOR THE DISTRICT OF NEVADA

HALO ELECTRONICS, INC., Plaintiff, v. PULSE ELECTRONICS, INC. and PULSE ELECTRONICS CORPORATION, Defendants.	C.A. No. 2:07-CV-00331-PMP-PAL

ORDER

Presently before the Court is Defendants' Motion for Partial Summary Judgment of Non-Infringement (Doc. #239), filed on December 22, 2010. Plaintiff filed a Response (Doc. #257), on January 13, 2011. Defendants filed a Reply (Doc. #274), on January 31, 2011.

Also before the Court is Plaintiff's Motion for Partial Summary Judgment of Infringement (Doc. #244), filed on December 22, 2010. Defendants filed a Response (Doc. #264) on January 13, 2011. Plaintiff filed a Reply (Doc. #270) on January 31, 2011. Also before the Court is Plaintiff's Motion for Partial Summary Judgment of No Invalidity (Doc. #240), filed on December 22, 2010. Defendants filed a Re-

sponse (Doc. #261), on January 13, 2011. Plaintiff filed a Reply (Doc. #271), on January 31, 2011. Also before the Court is Defendants' Motion for Summary Judgment of Invalidity (Doc. #250), filed on December 22, 2010. Plaintiff filed a Response (Doc. #256), on January 13, 2011. Defendants filed a Reply (Doc. #273), on January 31, 2011.

Also before the Court is Defendants' Motion for Summary Judgment on Equitable Estoppel, Laches, and Failure to Give Notice under 35 U.S.C. § 287(a) (Doc. #249), filed on December 22, 2010. Plaintiff filed a Response (Doc. #258), on January 13, 2011. Defendants filed a Reply (Doc. #275), on January 31, 2011.

Also before the Court is Defendants' Motion for Summary Judgment of No Liability for Defendants' Sales Activity Outside of North America (Doc. #251), filed on December 22, 2010. Plaintiff filed a Response (Doc. #251), on January 13, 2011. Defendants filed a Reply (Doc. #276), on January 31, 2011.

Also before the Court is Plaintiff's Motion to Strike Pulse's New Summary Judgment Argument in Reply and to Amend the Parties' September 2010 Stipulation (Doc. #279), filed on February 2, 2011. Defendants filed a Response (Doc. #281), on February 22, 2011. Plaintiff filed a Reply (Doc. #283), on March 4, 2011.

I. BACKGROUND

This is a patent infringement action brought by Plaintiff Halo Electronics, Inc. ("Halo") against

Defendants Pulse Engineering, Inc. and Technitrol, Inc. (collectively "Pulse"). Halo owns a family of patents that relate to a design for a surface-mount package and are denoted by U.S. Patent Nos. 5,656,985 ("'985 Patent"); 6,297,720 ("'720 Patent"); and 6,344,785 ("'785 Patent") (collectively the "Halo Patents"). (Pl.'s Opp'n Mot. for Summ. J. Non-Infringement ["Opp'n Non-Infringement"] (Doc. #257).) The three patents stem from the '985 Patent application filed on August 10, 1995. (Id., Ex. 57.)

The Halo Patents name six individuals as inventors, three employees of Halo and three employees of Halo's Hong Kong based manufacturer, Perfect Brave Limited ("PBL"). (Decl. of James Heaton (Doc. #243) ["12/22/2010 Heaton Decl."] at ¶ 2.) Once the open construction design of the surface-mount package had been conceived, two of the inventors, Halo employees Jeff and James Heaton, were eager to see if the new design could withstand high temperatures without cracking. (Id. at ¶ 3.) Halo thus obtained what it contends were prototypes samples for high temperature testing from PBL. (Id.) An August 5, 1994 invoice from PBL to Halo shows that PBL sent 50 "samples" of each of the new prototypes to Halo, with Halo receiving the samples no earlier than August 8, 1994. (Decl. of Craig Countryman ["Countryman Decl."] (Doc. #248), Ex. 10). The invoice shows charges for the parts denoted as samples for $300. (Id.)

Halo did not have an industrial, high temperature oven at its U.S. facilities like the type used by its customers, so Jeff and James Heaton performed tests of the prototypes by exposing them to heat in

their home ovens at the highest temperature possible. (12/22/2010 Heaton Decl. at ¶ 4.) They also placed control parts under the same conditions to observe if the new design was indeed better. (Id.)

In July 2002, counsel for Halo sent then Pulse President John Kowalski a letter stating in part:

> We are writing on behalf of Halo . . . to notify you of certain surface mount packaging patents the company has recently acquired, copies of which are enclosed for your reference. Halo is interested in licensing these patents, and would like to solicit your company's interest in entering into negotiations for the license of these patented technologies.

(Defs.' Mot. for Summ. J. Equitable Estoppel, Laches, & Failure to Mark ["MSJ Estoppel"] (Doc. #249), Ex. 7.) On August 6, 2002, counsel for Halo sent another letter stating:

> There is reason to believe that surface mount products manufactured by your Company which are not transfer molded construction may possess features similar to those embodied in the patented devices described in Halo's patents previously provided to you. Halo has not yet reached any conclusive determinations as to whether your company's products are covered by its patents; rather Halo is devoting its energy to working out suitable ar-

> rangements with companies that would benefit from licensing Halo's patented technologies.

(Id., Ex. 8.)

Halo brought an infringement complaint on March 15, 2007, alleging that Pulse sells surface mount packages which infringe on the Halo Patents. (Compl. (Doc. #1).) Based on product drawings and part to drawing information produced by Pulse, Pulse and Halo have agreed to arrange products in groups to be represented by the following eleven products: H0022; H0009; H1260; 23Z110SMNL; H6502NL; H1305; H1174; H0026; PE-5762QNL; H0019; and PE-67540NL. (Stip. Regarding Representative Products (Doc. #217), Ex. A.)

On June 14, 2010, this Court entered an Order construing the disputed claim terms of the Halo Patents and ordered Halo to limit its selection to fifteen asserted claims. (Order Claim Construction ["Claim Construction"] (Doc. #194).) On June 28, 2010, pursuant to this Court's Order, Halo limited its assertions against Pulse to the following claims: Claims 1, 2, 3, 7, 8, and 16 of the '985 Patent; Claims 1 and 6 of the '720 Patent; and Claims 1, 2, 18, 26, 40, and 48 of the '785 Patent (the "Asserted Halo Claims"). (Pl.'s Selection of Proposed Asserted Claims (Doc. #196).)

The parties now bring several motions and cross-motions for summary judgment regarding infringement; invalidity; equitable estoppel, laches, and failure to mark; and liability for sales outside of

North America. The Court will analyze each of these motions below.

II. SUMMARY JUDGMENT STANDARD

Summary judgment is appropriate if the pleadings, depositions, answers to interrogatories and admissions, and affidavits demonstrate "there is no genuine dispute as to any material fact and the movant is entitled to judgment as a matter of law." Fed. R. Civ. P. 56(a). A fact is "material" if it "might affect the outcome of the suit under the governing law." Anderson v. Liberty Lobby, Inc., 477 U.S. 242, 248 (1986). An issue is genuine if "the evidence is such that a reasonable jury could return a verdict for the nonmoving party." Id. Where a party fails to offer evidence sufficient to establish an element essential to its case, no genuine issue of material fact can exist, because "a complete failure of proof concerning an essential element of the nonmoving party's case necessarily renders all other facts immaterial." Celotex Corp. v. Catrett, 477 U.S. 317, 322-23 (1986).

The party "seeking summary judgment bears the initial responsibility of informing the district court of the basis for its motion, and identifying those portions of 'the pleadings . . .' which it believes demonstrate the absence of a genuine issue of material fact." Id. at 323 (quotation omitted). The burden then shifts to the non-moving party to go beyond the pleadings and set forth specific facts demonstrating there is a genuine issue of material fact for trial. Fairbank v. Wunderman Cato Johnson, 212 F.3d 528, 531 (9th Cir. 2000). The Court views all evidence in the light most favorable to the non-moving

party. County of Tuolumne v. Sonora Cmty. Hosp., 236 F.3d 1148, 1154 (9th Cir. 2001).

III. INFRINGEMENT/NON-INFRINGEMENT (Doc. #244 and #239)

Determination of infringement is a two step process. First, the court determines the meaning and scope of the asserted patent claims. Claim language is construed with its ordinary and customary meaning, "the meaning that the [language] would have to a person of ordinary skill in the art in question at the time of the invention." Phillips v. AWH Corp., 415 F.3d 1303, 1312-13 (Fed. Cir. 2005). The court then determines whether all of the claim limitations are present, either literally, or by equivalent, in the accused device. Innovention Toys, LLC v. MGA Entm't, Inc., 673 F.3d 1314, 1318-19 (Fed. Cir. 2011). "[A]n accused product or process is not infringing unless it contains each limitation of the claim, either literally or by an equivalent." Freedman Seating Co. v. Am. Seating Co., 420 F.3d 1350, 1358 (Fed. Cir. 2005).

"The doctrine of equivalents prohibits one from avoiding infringement liability by making only 'insubstantial changes and substitutions . . . which, though adding nothing, would be enough to take the copied matter outside the claim, and hence outside the reach of law.'" Siemens Med. Solutions USA, Inc. v. Saint-Gobain Ceramics & Plastics, Inc., 637 F.3d 1269, 1279 (Fed. Cir. 2011) (quoting Graver Tank & Mfg. Co. v. Linde Air Prods., 339 U.S. 605, 607 (1950)). "Under the doctrine of equivalents, a product or process that does not literally infringe upon the express terms of a patent claim may nonetheless be found to infringe if there is 'equivalence' between the

elements of the accused product or process and the claimed elements of the patented invention." Freedman, 420 F.3d at 1357. The doctrine of equivalents must be applied to each element of a claim, not the patented invention as a whole, therefore each element of a patent must have an equivalent for infringement to be found. Warner-Jenkinson Co., Inc. v. Hilton Davis Chem. Co., 520 U.S. 17, 30 (1997).

The main inquiry under a theory of equivalents is the "function-way-result test," which asks "whether an element of an accused product performs substantially the same function in substantially the same way to obtain the same result as an element of the patented invention." Siemens Med. Solutions, Inc, 637 F.3d at 1279. The interchangeability of substitutes for an element of a patent has bearing on whether the accused device is substantially the same as the patented invention. Warner-Jenkinson Co., Inc., 520 U.S. at 36. However, the interchangeability of components must be known to one skilled in the art at the time of the patent and "[i]ndependent experimentation by the alleged infringer would not always reflect upon . . . whether a person skilled in the art would have known of the interchangeability." Id. Further, the patentee may not assert a theory of equivalence that would render a particular claim element without meaning. Id. at 39 n.8. Additionally, under the theory of prosecution history estoppel, "a patentee may not seek to recapture as an equivalent subject matter surrendered during prosecution." Trading Tech. Int'l, Inc. v. eSpeed, Inc., 595 F.3d 1340, 1355 (Fed. Cir. 2010).

Courts have refused to apply the doctrine of equivalents where "the accused device is the antithesis of the claimed structure." Planet Bingo, LLC v. GameTech Int'l, Inc., 472 F.3d 1338, 1345 (Fed. Cir. 2006) (finding no infringement where the doctrine of equivalents would need to change the claim language from "before" to "after"). Likewise, infringement was not found under the doctrine of equivalents where an accused product contained a minority of adhesive strips where the claim called for a majority, an unmounted computer compared to the claim language of a mounted computer, or elongated slots within, rather than on top of, the claimed container. Moore U.S.A., Inc. v. Standard Register Co., 229 F.3d 1091, 1106 (Fed. Cir. 2000); Asyst Tech., Inc. v. Emtrak, Inc., 402 F.3d 1188, 1195 (Fed. Cir. 2005); Sage Prod., Inc. v. Devon Indus., Inc., 126 F.3d 1420, 1425-26 (Fed. Cir. 1997).

A court "may determine infringement on summary judgment when no reasonable jury could find that every limitation recited in the properly construed claim either is or is not found in the accused device." Innovention Toys, 637 F.3d at 1319. However, "[b]ecause infringement under the doctrine of equivalents often presents difficult factual determinations," summary judgment often is not appropriate" Leggett & Platt, Inc. v. Hickory Springs Mfg. Co., 285 F.3d 1353, 1360 (Fed. Cir. 2002). Conflicting expert testimony can create a genuine issue of material fact sufficient to avoid summary judgment. LG Elec., Inc. v. Bizcom Elec., Inc., 453 F.3d 1364, 1376 (Fed. Cir. 2006); see also Overhead Door Corp. v. Chamberlain Group, Inc., 194 F.3d 1261, 1269 (Fed. Cir. 1999) (expert's report was sufficient to create

genuine issue of material fact that features of the accused product were insubstantially different from claim terms). However, on a motion for summary judgment, the expert's testimony must set forth "the factual foundation for his opinion-such as a statement regarding the structure found in the accused product-in sufficient detail for the court to determine whether that factual foundation would support a finding of infringement under the claim construction adopted by the court, with all reasonable inferences drawn in favor of the nonmovant." Arthur A. Collins, Inc. v. N. Telecom Ltd., 216 F.3d 1042, 1047-48 (Fed. Cir. 2000). Similarly, "a party cannot create an issue of fact by supplying an affidavit contradicting his prior deposition testimony, without explaining the contradiction or attempting to resolve the disparity." Sinskey v. Pharmacia Opthalmics, Inc., 982 F.2d 494, 498 (Fed. Cir. 1992).

Here, the Court previously has interpreted the claim language of the '985, '720, and '785 patents. (Claim Construction.) Pulse now moves for summary judgment of non-infringement as to (1) each product represented by the H6502NL, PE-5762QNL, and PE-67540NL parts; (2) each asserted Claim of the '985 Patent, Claim 6 of the '720 Patent, and Claims 2 and 26 of the '785 Patent with respect to the products represented by the H0009 and H0019 parts; and (3) Claim 7 of the '985 Patent, and Claims 18 and 48 of the '785 Patent with respect to all the accused products. Plaintiff Halo moves for partial summary judgment of infringement with respect to (1) Claims 1, 2, 6, 7, 8, and 16 of the '985 Patent; (2) Claims 1 and 6 of the '720 Patent; and (3) Claims 1, 2, 18, 26, 40, and 48 of the '785 Patent.

A. Products Represented by H6502NL, PE-5762QNL, and PE-67540NL

All of the Asserted Halo Claims require either "a plurality of toroid transformers" or "at least one toroid transformer." Pulse argues that the products represented by the H6502NL, PE-5762QNL, and PE-67540NL parts do not infringe any of the Asserted Halo Claims, either literally or under the doctrine of equivalents, because the above products do not contain any toroid transformers. Additionally, Pulse argues that Halo appreciated the differences between toroid transformers and toroid chokes at the time of the patent applications because Halo expressly claimed toroid chokes in the '151 Patent, filed contemporaneously with the Patents at issue here, yet omitted any mention of toroid chokes in the present Patent. Pulse argues, therefore, that the Court should hold that a toroid choke is not the equivalent of a toroid transformer as a matter of law. Halo responds that each of the accused products contains one or more toroid chokes which, under the doctrine of equivalents, are equivalent to toroid transformers and therefore summary judgment in Pulse's favor is inappropriate.

Halo inventor Jeffrey Heaton testified that transformers and common mode chokes cannot be used interchangeably. (Mot. for Summ. J. of Non-Infringement (Doc. #239), Ex. 7 ["7/21/2010 Dep. of Jeff Heaton."] at 30-31.) Another Halo inventor, Peter Lu ("Lu"), testified that while common mode chokes can pass both AC and DC signals, transformers are unable to pass DC signals. (Mot. for Summ. J. of Non-Infringement, Ex. 20 at 168-171.) However,

Lu also testified that while toroid chokes and toroid transformers are not interchangeable if the external and internal connections remain the same, they can be interchangeable if the external and internal connections are altered. (Id.)

Dr. Wilmer Bottoms ("Bottoms") testified that toroid chokes and toroid transformers are physically identical in the context of the Asserted Halo Claims. (1/13/2011 Decl. of Dr. Wilmer Bottoms "[1/13/2011 Bottoms Decl."] (Doc. #259) at ¶ 108.) Additionally, Bottoms states that toroid chokes and toroid transformers are both constructed and situated inside the package in the same manner. (Id. at ¶ 109.) Bottoms states that toroid chokes do not actually become toroid chokes until they are placed in a circuit in a manner that produces the electrical characteristics of a choke, and that a toroid transformer may be used as a toroid choke simply by arranging the circuitry external to the accused product in a different manner. (Id. at ¶ 110.) Pictures of the accused products show no discernable difference between the physical characteristics of toroid chokes and toroid transformers. (Opp'n Non-Infringement at 4.) With respect to the PE-5762QNL product groupings, Bottoms declares that the drawing and electrical schematics show that the product contains a single toroid transformer. (1/13/2011 Bottoms Decl. at ¶ 112.) Bottoms notes that the parts drawing for the PE-5762QNL contains the notation "XFRM," which is an abbreviation for transformer. (Id.)

Here, viewing all evidence in the light most favorable to Halo, the non-moving party, conflicting expert testimony creates a genuine issue of material

fact that a toroid choke reads on the limitation of one or more toroid transformers. While Pulse offered testimony showing that toroid chokes and toroid transformers are not interchangeable, Halo has offered conflicting expert testimony supported by factual assertions that creates a genuine issue of material fact.

Halo offered Bottoms' deposition testimony that, for the purposes of the Asserted Halo Claims, toroid chokes and toroid transformers are physically identical; toroid chokes and toroid transformers are substantially similar in terms of how they are constructed and connected within the package; and that toroid chokes are interchangeable with toroid transformers if the external circuitry is arranged in a different manner. As factual support for his testimony, Bottoms offers his knowledge about the electrical characteristics of toroid chokes and toroid transformers; knowledge about the construction of toroid chokes and toroid transformers; and pictures of the accused products and Halo's products showing that toroid chokes and toroid transformers both consist of wire wrapped toroids and are physically identical. Viewing all evidence in the light most favorable to Halo, a genuine issue of material fact exists as to whether the toroid chokes present in the products represented by H6502NL and PE-67540NL are the equivalent of toroid transformers. Additionally, there is a genuine issue of material fact that PE-5762QNL contains a toroid transformer. Accordingly, summary judgment of non-infringement of the products represented by the H6502NL, PE-5762QNL, and PE-67540NL parts is inappropriate and the Court will deny Defendants' motion in this respect.

B. Products Represented by the H0009 and H0019

All of the Asserted Halo Claims require the toroids to be "by/in a soft silicone material." The Court construed the claim language "by/in a soft silicone material" to mean "retained inside the package by a soft silicone material." (Claim Construction at 18.) "Soft silicone material" means " a soft silicone material that is resilient so as to allow expansion of the toroid when heated." (Id.) This Court has acknowledged that to one of ordinary skill in the art, "soft silicone does not mean hard plastic or epoxy." (Id.) Therefore use of epoxy to retain toroids in their packaging would not satisfy this claim element.

Pulse argues that the products represented by the H0009 and H0019 parts do not infringe any of the Asserted Halo Claims, either literally or under the doctrine of equivalents, because the above products do not use soft silicone to retain their transformers. Pulse states that the H0009 and H0019 parts use hard plastic or epoxy to retain their toroids. Halo states that the toroids present in the products represented by the H0009 and H0019 parts are retained inside the package by a resilient silicone material and hence infringe on the Asserted Halo Claims.

Long-time Pulse engineer Aurelio Gutierrez ("Gutierrez") declares that early on in the assembly process, the toroids of the accused products are dipped into silicone material. (Mot. for Summ. J. of Non-Infringement, Ex. 13 ["Gutierrez Decl."] at ¶ 9.) Gutierrez states that this initial coating is a separate

and distinct procedure from the procedure which retains the toroids in the packaging. (Id.) Gutierrez also declares that the toroids of the H0009 and H0019 products are later retained in their package by the epoxy Dexter-Hysol E01057. (Id. at ¶¶ 10-11.) Product drawings and bill-of-materials information for the H0009 and H0019 products show that Dexter-Hysol E01057 is used in the products. (Mot. for Summ. J. Non-infringement, Exs. 17, 18.)

However, Bottoms declares that the toroids of the H0009 and H0019 products are retained in their packaging by soft silicone that is resilient so as to allow expansion of the toroid when heated. (1/13/2011 Bottoms Decl. at ¶ 113.) To support his position, Bottoms offers drawings and product schematics of the H0009 and H0019 products. (Id.) Bottoms states that the toroids of the H009 and H0019 products are coated with soft silicone which surrounds the toroid on all sides and then placed in the package. (Id.) Bottoms states that after the toroids are placed in package, a small amount of epoxy is placed in the package. (Id. at ¶ 114.) According to Bottoms, the epoxy never comes into direct contact with the toroids and is placed next to the toroids, contacting the silicone coated toroids only if they move laterally within the package. (Id.) It is Bottoms' opinion that "silicone retains the toroids in the H0009 and H0019 products." (Id. at ¶ 113.)

Here, Halo has presented evidence, in the form of Bottoms' declaration, that the toroids in the H0009 and H0019 products are retained by a soft silicone material that is resilient so as to allow expansion of the toroid when heated. Bottoms offers pic-

tures of the H0009 and H0019 showing the toroids coated in silicone material and the placement points for epoxy to support his declaration. Viewing this evidence in the light most favorable to Halo, as the Court must, there is a genuine issue of material fact as to whether the toroids of the H0009 and H0019 products are retained in their packages by a soft silicone material. Accordingly, summary judgment of non-infringement of the products represented by the H0009 and H0019 parts is inappropriate and the Court will deny Defendants' motion in this respect.

C. Claim 7 of the '985 Patent and Claims 18 and 48 of the '785 Patent

Claim 7 of the '985 Patent and Claims 18 and 48 of the '785 Patent (collectively, the "Asserted Standoff Claims") require a portion of the package designed to rest in contact with the printed circuit board after mounting to prevent the solder posts from contacting the printed circuit board. Pulse argues that none of the accused products are designed to have a portion of their respective packages rest in contact with the printed circuit board. Halo responds that the accused Pulse products contain a standoff that is designed to rest in contact with the printed circuit board after mounting to prevent the solder posts from contacting the printed circuit board for maintaining a distance between the bottom of the pins and the printed circuit board.

Gutierrez declares that "[n]one of the accused Pulse products are designed to have a portion of their respective packages rest in contact with the printed circuit board after mounting." (Gutierrez Decl. at ¶

13.) Additionally, Gutierrez states that terminal pins, rather than a standoff, are used to "prevent the end walls, or any other portion of the package, from resting in contact with the circuit board after mounting." (Id.)

Bottoms declares that the Pulse H0022 product includes a standoff designed to prevent the solder posts from contacting the printed circuit board for maintaining a distance between the bottom of the pins and the printed circuit board. (1/13/2011 Bottoms Decl. at ¶ 117.) Bottoms further declares that the Pulse H0022 standoffs are intended to rest in contact with the printed circuit board and prevent damage to the printed circuit board or the device. (Id.) In Bottoms' expert opinion, all of the representative products include a standoff. (Id.) Bottoms bases his opinion on examination of the Asserted Standoff Claims and the accused Pulse products, as well as schematic drawings of Pulse product H0022 which he contends shows a standoff. Additionally, Dr. Lawrence Larson ("Larson"), an expert retained by Pulse, testified that the standoffs in the '985 patent were designed to rest in contact with the printed circuit board. (Countryman Decl. (Doc. #269), Ex. 24 at 224-25.)

Viewing all evidence in the light most favorable to Halo, as the Court must, conflicting expert testimony creates a genuine issue of material fact that the accused products contain a standoff designed to rest in contact with the printed circuit board after mounting to prevent the solder posts from contacting the printed circuit board. While Pulse offered the declaration of its employee that its products do not

contain a standoff in accordance with the Asserted Standoff Claims, Halo offered Bottoms' declaration that the accused Pulse products contain a standoff. Bottoms' declaration is supported by analysis of the Asserted Standoff Claims and comparison to the accused products, as well as schematic drawings of Pulse product H0022 showing a structure consistent with a standoff. Accordingly, summary judgment of non-infringement of Claim 7 of the '985 Patent or Claims 18 and 48 of the '785 Patent is inappropriate and the Court will deny Defendants' motion in this respect.

D. Infringement of Claims 6 of the '985 Patent

Claim 6 of the '985 Patent requires the following:

An electronic surface mount package for mounting on a printed circuit board in an electronic device, said electronic surface mount package comprising:

- a one piece construction package having a sidewall and an open bottom,
- a plurality of toroid transformers carried within said package by a soft silicone material, said transformers each having wires wrapped thereon,
- a plurality of terminal pins molded within and extending from the bottom of said package, each of said pins extending through a bottom of said side wall and having a notched post upon which said wires from said transformers are wrapped and soldered thereon, respectively.

This Court construed the phrase "an electronic surface mount package for mounting on a printed circuit board in an electronic device" to mean "an electronic device configured to attach to the surface of a DC voltage only printed circuit board." (Claim Construction at 16.) This Court construed "by a soft silicone material" to mean "retained inside the package by a soft silicone material" and "a soft silicone material" to mean "a silicone material that is resilient so as to allow expansion of the toroid when heated." (Id.)

Halo argues that the products represented by Pulse products H0022, H1260, H1305, H1174, and H0026 read on all the limitations of Claim 6 of the '985 Patent, therefore, summary judgment is appropriate. Pulse responds that there are genuine issues of material fact that the accused H0022, H1260, H1305, H1174, and H0026 products contain all of the claim limitations, hence summary judgment is inappropriate. Additionally, Pulse previously moved for summary judgment of non-infringement with respect to these parts arguing, among other things, that the toroids of the accused Pulse products are not retained in their package by soft silicone. While the evidence presented by Pulse was not sufficient to grant summary judgment, it may be used to create a genuine issue of material fact in opposition to Halo's motion.

Bottoms declares that the accused Pulse products meet the claim limitations of Claim 6 of the '985 Patent. (12/22/2010 Decl. of Wilmer Bottoms ["12/22/2010 Bottoms Decl."] (Doc. #247) at ¶¶ 14-20.) Bottoms bases his opinion on analysis of the accused Pulse products and the Halo Patents as well as

product drawings of the accused Pulse products which appear to show a one piece construction having an open bottom and side wall. (Id.)

Larson declares that each accused Pulse product is designed and configured to attach to a board that passes both AC and DC signals and therefore does not meet the "DC voltage only printed circuit board" claim restriction. (Decl. of Lawrence Larson ["Larson Decl."] (Doc. #266) at ¶ 3.) In connection with Pulse's Motion for Summary Judgment of Non-infringement, Gutierrez declared that he was familiar with the manufacturing process of the accused products, and that early on in the manufacturing process, the toroids were dipped in silicone material and then later were retained in their packages by a separate adhesive.

Viewing all evidence in the light most favorable to Pulse, as the Court must when deciding Halo's motion, there are genuine issues of material fact as to whether the H0022, H1260, H1305, H1174, and H0026 products meet the limitations of Claim 6 of the '985 Patent. Pulse's prior motion provided evidence that, while not sufficient to grant summary judgment to Pulse, creates a genuine issue of material fact as to whether the toroids in the accused Pulse products are retained in their packages by soft silicone. Accordingly, the Court will deny summary judgment on this issue.

E. Infringement of Claim 7 of the '985 Patent

Claim 7 of the '985 Patent requires the claim limitations of Claim 6 in addition to "a standoff for

maintaining a distance between the bottom of said pins and said printed circuit board." The Court construed "standoff" to mean "a portion of the package designed to rest in contact with the printed circuit board after mounting in order to prevent the solder posts from contacting the printed circuit board." (Claim Construction at 20.)

Halo argues that the products represented by Pulse products H0022, H1260, H1305, H1174, and H0026 read on all limitations of Claim 7 of the '985 Patent. As it did in its motion for summary judgment, Pulse argues that the standoff limitation of Claim 7 of the '985 patent is not present in the above accused products.

Bottoms declares that the accused Pulse products contain a standoff as required by Claim 7 of the '985 Patent. (12/22/2010 Bottoms Decl. at ¶ 28.) Bottoms bases his opinion on analysis of the accused Pulse Products and the claim language of Claim 7. (Id.) Drawings of the accused products appear to show ends walls, which also may serve as a standoff. (Id. at ¶ 26.) Gutierrez declares that none of the above accused pulse products has such a standoff. (Gutierrez Decl. at ¶¶ 13-24.) Gutierrez also states that the representative products include terminal pins that extend from the package side walls and below the package end walls for mounting onto the surface of a printed circuit board, and that these pins, as opposed to a standoff, prevent any portion of the package from resting in contact with the circuit board. (Id.)

Viewing all evidence in the light most favorable to Pulse, as the Court must when deciding Halo's motion, there are genuine issues of material fact as to whether the H0022, H1260, H1305, H1174, and H0026 products meet the limitations of Claim 7 of the '985 Patent. Pulse has offered evidence sufficient to create a genuine issue of material fact as to whether the accused products contain a standoff. Pulse offers the Gutierrez declaration supported by his analysis of the accused products and the Halo Patents for this proposition. Supported conflicting expert testimony is sufficient to create a genuine issue of material fact. Additionally, the side view drawings of the accused products do not conclusively show that the end wall is designed to rest in contact with the printed circuit board. Accordingly, Halo has not met its burden of showing no genuine issue of material fact remains as to the existence of a side wall designed to rest in contact with a printed circuit board. Therefore, summary judgment that Pulse infringes on Claim 7 of the '985 patent is inappropriate. The Court will deny Plaintiff's motion in this respect.

F. Infringement of Claims 1, 2, and 8 of the '985 Patent

Claim 1 of the '985 Patent is materially similar to Claim 6 of the '985 Patent with the exception that the preamble of Claim 1 does not recite the "for mounting on a printed circuit board in an electronic device" language. The limitations of Claim 2 are materially similar to Claims 1 and 6 with the exception that Claim 2 does not require "one piece" construction, and, like Claim 1, does not contain the "for mounting on a printed circuit board in an electronic

device" language in the preamble. Claim 8 of the '985 Patent contains the same limitations as Claims 2 and 6 with the exception that Claim 8 requires only one toroid transformer rather than a plurality of toroid transformers.

Halo relies on its earlier analysis of Claim 6 to allege that the products represented by Pulse products H0022, H1260, H1305, H1174, and H0026 infringe on Claims 1 and 2 of the '985 Patent. Halo also contends that Pulse products represented by 23Z110SMNL contain one toroid transformer and thus infringe on Claim 8 of the '985 Patent. Pulse relies on its earlier Motion for Summary Judgment of Non-infringement to argue that the accused products do not read on all the limitations of Claims 1, 2, and 8 of the '985 Patent.

As set forth earlier in this Order with respect to Claim 6 of the '985 Patent, there is a genuine issue of material fact as to whether the toroids of the accused products are retained in their packages by soft silicone material. Claims, 1, 2, and 8 of the '985 Patent require toroids to be retained in their packages by soft silicone. Accordingly, summary judgment in favor of Halo is not appropriate with respect to Claims 1, 2, and 8 of the '985 patent.

G. Infringement of Claim 16 of the '985 Patent

Claim 16 of the '985 Patent Halo requires the following limitations:

An electronic surface mount package comprising: a construction package having a first side wall and an open bottom,

at least one toroid transformer carried within said package by a soft silicone material, said toroid transformer having a wire wrapped thereon,

at least one terminal pin molded within and extending from the bottom of said package, said pin extending through a bottom of said first side wall and having a notched post upon which said wire from said transformer is wrapped and soldered thereon, wherein said post is substantially parallel to said first side wall, and a portion of said terminal pin extends from and is substantially perpendicular to said first side wall, said terminal pin further including a lead for mounting onto the surface of the printed circuit board,

an end wall substantially perpendicular to said first side wall, wherein at least a portion of said end wall extends below said post, and

a second side wall substantially parallel to said first side wall, and wherein said wire from said transformer is contained between first and second planes defined respectively, by an outside surface of said first side wall, and an outside package of said second side wall.

Halo argues that all of the accused products infringe on the limitations that are unique to Claim 16 of the '985 Patent. In its Response, Pulse does not

specifically dispute the limitations that are unique to Claim 16. However, in its Motion for Summary Judgment, discussed above, Pulse argues that the toroids in its products are not retained by soft silicone, which would be required to infringe on Claim 16 of the '985 Patent.

As set forth earlier in this Order with respect to Claim 6 of the '985 Patent, there is a genuine issue of material fact as to whether the toroids of the accused products are retained in their packages by soft silicone material. Claims 16 of the '985 Patent requires toroids to be retained in their packages by soft silicone. Accordingly, summary judgment in favor of Halo is not appropriate with respect to Claim 16 of the '985 patent.

G. Claim 1 of the '720 Patent

Claim 1 of the '720 Patent requires the following limitations:

An electronic surface mount package for mounting onto the surface of a printed circuit board in an electronic device, said package comprising:

- a one piece open construction package having a side wall,
- a plurality of toroid transformers within said package, said transformers each having wires wound thereon,
- a plurality of terminal pins molded within the side wall of said package, the ends of the terminal pins forming solder posts and extending through and below the bottom of said side wall,

> said solder posts each having an hour-glass shaped notch upon which said wires from said transformers are wrapped and soldered thereon, respectively,
> the other end of each of the terminal pins extending in gull wing fashion outwardly from the side wall and below the bottom of the package for mounting onto the surface of the printed circuit board.

The Court construed "hour-glass shaped notch" to mean "a notch formed by two mirrored indentations on opposite edges of the solder post." (Claim Construction at 22.) The Court construed "gull wing fashion" to mean "extending outwardly from the case, then extending in a downward fashion away from the case, and then extending outwardly from the case." (Id.)

Halo argues that the H0022, H1260, H1305, H1174, H0026, and H0019 representative products infringe on Claim 1 of the '720 Patent. Halo contends that drawings of the accused products show that the accused products read on all limitations. Pulse responds that the accused products represented by the Pulse H0026 product utilize "J-leads" that do not extend in a gull wing fashion as terminal pins. Additionally, Pulse argues that Halo has not met its burden of showing no genuine issue of material fact remains because it only completes an analysis on the representative product H0022, and Halo merely states that analysis of the other representative parts yields similar results.

Drawings of the accused representative product H0022 appear to show that the product contains gull wing terminal pins. (Countryman Decl. (Doc. #248), Exs. 18, 19.) Drawings also show one piece construction and a plurality of toroid transformers. (Id.) Drawings of the H0022 product also appear to show an hour glass shaped notch. (Id., Ex. 18.) Bottoms declares that the representative products include one or more terminal pins that are molded within and extend through and below the bottom of the side wall. (12/22/2010 Bottoms Decl. at ¶¶ 34-35.) Additionally, Bottoms states that the representative products have terminal pins that extend in a "gull wing" fashion. (Id. at ¶ 36.) Drawings of the H0026 product appear to show terminal pins extending in a "J lead" rather than "gull wing" fashion. (Mot. for Summ. J. of Non-Infringement (Doc. #239), Exs. 23, 24.)

Pulse has presented sufficient evidence to create a genuine issue of material fact as to whether the H0026 product contains terminal pins extending in a "gull wing" fashion. Accordingly summary judgment in favor of Halo on this issue is inappropriate and will be denied. Pulse does not respond specifically to Halo's argument that products other than those represented by the H0026 product infringe on Claim 1 of the '720 Patent. However, Pulse argues that Halo's "cursory" analysis of products other than the H0022 does not meet Halo's burden of showing no genuine issue of material fact as to whether the representative products read on all limitations of Claim 1. The Court agrees Halo has not met its burden with respect to products other than the H0022 and summary judgment will be denied in that respect. With

respect to the H0022 representative product, Halo has provided sufficient evidence showing that the H0022 representative product reads on all limitations of Claim 1 of the '720 Patent. Pulse has not provided sufficient evidence creating a genuine issue of material fact as to whether the H0022 product reads on all limitations of Claim 1 of the '720 Patent. Accordingly, the Court will grant partial summary judgment in favor of Halo with respect to the H0022 product only.

H. Claim 6 of the '720 Patent

Claim 6 of the '720 Patent requires the following limitations:

> An electronic surface mount package for mounting onto the surface of a printed circuit board comprising:
> an open construction package having a side wall, at least one toroid within said package in a soft silicone material, said transformer having a wire wound thereon,
> at least one terminal pin molded within the side wall of said package,
> said one end forming a solder post extending through and below the bottom of said side wall said solder post having a notched post upon which said wire from said transformer is wrapped and soldered thereon.

Halo argues that drawings and testimony regarding the H0022, H1260, H1305, H1174, H0026, and 23Z110SMNL representative products show that these products read on all limitations of Claim 6 of

the '720 Patent. Pulse, as with Claim 1 of the '720 Patent, argues that Halo has not met its burden of showing no genuine issue of material fact remains as to whether the accused products read on all limitations of Claim 6 of the '720 Patent.

As set forth earlier in this Order with respect to Claim 6 of the '985 Patent, there is a genuine issue of material fact as to whether the toroids of the accused products are retained in their packages by soft silicone material. Claim 6 of the '720 Patent requires "at least one toroid transformer within . . . soft silicone material." Accordingly, there is a genuine issue of material fact as to whether the H0022, H1260, H1305, H1174, H0026, and 23Z110SMNL representative products meet this limitation. Accordingly, summary judgment on this issue is inappropriate and will be denied.

I. Claim 1, of the '785 Patent

Claim 1 of the '785 Patent requires the following limitations:

> An electronic surface mount package for mounting onto the surface of a printed circuit board comprising:
> a side wall with a bottom end,
> a plurality of toroid transformers within the package, the toroid transformers each having wires wrapped thereon,
> a plurality of terminal pins molded within the side wall and having a solder post with an end upon which the wires from the transformers are respectively wrapped and sol-

> dered thereon, each of the post ends extending beyond the bottom of the side wall.

Halo argues that the products represented by Pulse products H0022, H1260, H1305, H1174, H0019, and H0026 infringe on Claim 1 of the '785 Patent. Pulse does not respond specifically to arguments that the products represented by Pulse products H0022, H1260, H1305, H1174, H0019, and H0026 infringe on Claim 1 of the '785 Patent, but instead argues that Halo has not met its burden of putting forth a prima facie case of infringement of Claim 1 of the '785 Patent.

Halo has not met its burden of showing no genuine issue of material fact as to whether the accused products read on all limitations of Claim 1 of the '785 Patent. While Bottoms declares that the representative products meet all limitations of Claim 1, he did not set forth the factual basis for his findings. Accordingly, his declaration is not sufficient to show no genuine issue of material fact remains. Therefore, summary judgment on this issue will be denied.

J. Claims 2 and 26 of the '785 Patent

Claims 2 and 26 of the '785 Patent are similar to Claim 1, but both Claims require toroids to be retained in their packages by a soft silicone material. Halo contends that the products represented by Pulse products H0022, H1260, H1305, H1174, H0019, and H0026 have toroids retained in their packages by soft silicone material and hence read on all limitations of Claims 2 and 26 of the '785 Patent.

In its response, Pulse does not respond specifically to the arguments that its products infringe on claims 2 and 26 of the '785 Patent. However, in its motion for summary judgment of non-infringement, Pulse argues that its accused products do not have toroids retained in soft silicone material.

As set forth earlier in this Order with respect to Claim 6 of the '985 Patent, there is a genuine issue of material fact as to whether the toroids of the accused products are retained in their packages by soft silicone material. Claims 2 and 26 of the '785 Patent require toroids retained in their package by a soft silicone material. Accordingly, there is a genuine issue of material fact as to whether the H0022, H1260, H1305, H1174, H0026, and 23Z110SMNL representative products meet this limitation. Accordingly, summary judgment on this issue is inappropriate and will be denied.

K. Claims 18 and 48 of the '785 Patent

Claims 18 and 48 of the '785 Patent both require a standoff and a gap between the bottom end of the side wall and the standoff. Halo contends that the H0022, H1260, H1305, H1174, H0019, and H0026 representative products contain a standoff and hence infringe on Claims 18 and 48 of the '785 Patent. Pulse contends that Halo has failed to prove that any of the accused products include a gap between the bottom end of the side wall and the standoff as required by Claims 18 and 48 of the '785 Patent.

Bottoms declares that the representative products contain a gap between the standoff and the bottom end of the sidewall. (12/22/2010 Bottoms Decl. at ¶ 44.) Larson declares that, in all accused Pulse products, the side wall and end wall are continuously touching and there is no gap between them. (Larson Decl. (Doc. #266) at ¶ 6.) From drawings of the H0022 product, it is unclear whether this product contains a standoff and gap. (Countryman Decl. (Doc. #248), Ex. 18.)

There is a genuine issue of material fact as to whether the H0022, H1260, H1305, H1174, H0019, and H0026 representative products contain a standoff and a gap between the standoff and the bottom end of the side wall. From drawings of the representative products it is unclear whether a gap is present, and the parties have presented conflicting expert testimony on the issue. Accordingly, summary judgment on this issue is inappropriate and will be denied.

L. Claim 40 of the '785 Patent

Claim 40 of the '785 Patent requires the following limitations: An electronic surface mount package for mounting onto the surface of a printed circuit board comprising:

a first side wall with a bottom end, a plurality of toroid transformers within the package, the toroid transformers each having wires wrapped thereon,

a plurality of terminal pins molded within the first side wall and having a solder post with an end upon which the wires from the

transformers are respectively wrapped and soldered thereon, each of the post ends extending beyond the bottom end of the first side wall, wherein each of the post ends is substantially parallel to the first side wall, and a portion of each of the terminal pins extends from and is substantially perpendicular to the first side wall, each of the terminal pins further including a lead for mounting onto the surface of the printed circuit board, and

a second side wall substantially parallel to the first side wall, and wherein the wires from the transformers are contained between the first and second planes defined, respectively, by an outside surface of the first side wall and an outside surface of the second side wall.

Halo contends that the H0022, H1260, H1305, H1174, H0019, H0026110SMNL representative products contain all limitations of Claim 40 of the '785 Patent and hence infringe on the '785 Patent. Halo provides an analysis of the drawing of the H0022 product and contends that it contains all the limitations of Claim 40 of the '785 Patent. Halo then asserts that analysis of the other representative products would show that these products read on all the limitations of Claim 40 as well. Pulse does not respond specifically to allegations that the above products read on the limitations of Claim 40 of the '785 Patent but contends that, for all Claims, Halo has not met its burden of showing no genuine issue of material fact as to whether all limitations are met.

Bottoms declares that the accused products contain posts that extend beyond the bottom end of a first side wall; that each of the posts is substantially parallel to the first side wall; that a portion of the terminal pins extends from and is substantially perpendicular to the first side wall; and that each of the terminal pins include a lead for mounting onto the surface of the printed circuit board. (12/22/2010 Bottoms Decl. at ¶ 45.) Drawings of the H0022 product appear to show terminal pins extending through a side wall; posts being substantially parallel to the side wall; and a portion of the terminal pins substantially perpendicular to the side wall. (Countryman Decl. (Doc. #248), Ex. 18.) Drawings of the H1260, 23Z110SMNL, H1305, H1174, H0026, and H0019 also appear to show terminal pins extending through a side wall; posts being substantially parallel to the side wall; and a portion of the terminal pins being substantially perpendicular to the side wall. (Countryman Decl. (Doc. #248), Exs. 25-31.)

Viewing all evidence in the light most favorable to Pulse, there is a genuine issue of material fact as to whether the accused products read on all limitations of Claim 40 of the '785 Patent. While the drawings of the accused representative products and Bottoms' testimony provided evidence that the accused products contain posts that extend beyond the bottom end of the first side wall; that each of the posts is parallel to the first side wall; and that a portion of the terminal pins are substantially perpendicular to the side wall, Halo does not provide any evidence to support Bottoms' contention that the terminal pins contain leads for mounting onto a printed circuit board. It is not clear from drawings of

the accused products that these products contain such leads. Accordingly, there is a genuine issue of material fact as to whether the H1260, 23Z110SMNL, H1305, H1174, H0026, and H0019 representative products read on all limitations of Claim 40 of the '785 Patent. Accordingly, summary judgement on this issue will be denied.

IV. INVALIDITY/VALIDITY (Doc. #250 and #240)

Under 35 U.S.C. § 102(b), a patent is invalid if "the invention was . . . in public use or on sale in this country, more than one year prior to the date of the application for patent in the United States." Invalidity is an affirmative defense and the burden of proof lies with the party challenging the patent's validity. Electromotive Div. of Gen. Motors Corp. v. Transp. Sys. Div. of Gen. Elec. Co., 417 F.3d 1203, 1212 n.2 (Fed. Cir. 2005).

To prove a patent invalid under the "on-sale" bar of § 102(b), the party claiming invalidity must prove that the invention in question was (1) the subject of a commercial, not experimental, sale, and (2) that the invention was ready for patenting. Allen Eng'g Corp. v. Bartell Indus., Inc., 299 F.3d 1336, 1353 (Fed. Cir. 2002). Factors to be considered when determining the experimental nature of a sale include:

> (1) the necessity for public testing, (2) the amount of control over the experiment retained by the inventor, (3) the nature of the invention, (4) the length of the test

> period, (5) whether payment was made, (6) whether there was a secrecy obligation, (7) whether records of the experiment were kept, (8) who conducted the experiment, . . . (9) the degree of commercial exploitation during testing[,] . . . (10) whether the invention reasonably requires evaluation under actual conditions of use, (11) whether testing was systematically performed, (12) whether the inventor continually monitored the invention during testing, and (13) the nature of contacts made with potential customers.

Id. (citing EZ Dock v. Schafer Sys., Inc., 276 F.3d 1347, 1357 (Fed. Cir. 2001)). Every factor may not be relevant in a particular case, rather the factors are to be balanced. Id. An invention is ready for patenting if (1) it was actually reduced to practice or (2) the inventor prepared sufficiently specific drawings or descriptions "to enable a person skilled in the art to practice the invention." Pfaff v. Wells Elec., Inc., 525 U.S. 55, 67-68 (1998). "To demonstrate reduction to practice, a party must prove that the inventor (1) constructed an embodiment or performed a process that met all the limitations and (2) determined that the invention would work for its intended purpose." In re Omeprazole Patent Lit., 536 F.3d 1361, 1373 (Fed. Cir. 2008) (quotation omitted). Further, "[t]esting is required to demonstrate reduction to practice in some instances because without such testing there cannot be sufficient certainty that the invention will work for its intended purpose." Id. (quotation omitted).

A. August 5, 1994 Sale

Pulse argues that the Halo Patents are invalid under 35 U.S.C. § 102(b) because products embodying the Halo Patents were sold commercially more than a year before the filing of the patent applications. Halo responds that Pulse cannot meet its burden to show that the August 5, 1994 transaction between Halo and PBL is invalidating under § 102(b) because the transaction was purely for experimental purposes and there is no evidence that the invention was ready for patenting more than a year before the first Halo Patent was. Pulse replies that it has put forth a prima facie showing that the August 5, 1994 sale was invalidating and Halo has not put forth sufficient evidence to rebut this showing. Additionally, Pulse contends that the experimental use exception cannot apply to the August 5, 1994 sale because the inventions already had been reduced to practice.

As the party claiming invalidity of the patents, Pulse bears the burden of showing that the invention in question was both (1) the subject of a commercial sale, and (2) that the invention was ready for patenting more than a year prior the date of the patent application. The Halo Patents were filed on August 10, 1995. Therefore, to be potentially invalidating, a commercial sale must have taken place prior to August 10, 1994. Only the August 5, 1994 sale is identified by Pulse to be an invalidating sale.

Even viewing all evidence in the light most favorable to Pulse, there is no genuine issue of material fact that the August 5, 1994 sale was for experimental, rather than commercial, purposes. The first,

third, and tenth factors analyze (1) the necessity for public testing, (3) the nature of the invention, and (10) whether the invention reasonably requires evaluation under actual conditions of use. James Heaton avers that prior surface mount packages would warp and crack at high temperatures and Halo needed to test its prototypes to ensure that they offered a reasonable solution to these prior problems before contracting with customers. (12/22/2010 Heaton Decl. at ¶¶ 2-7.) Pulse does not provide evidence raising a genuine issue of material fact in this regard. Rather, Pulse attacks the credibility of James Heaton without providing any evidentiary basis for doing so. Thus, Pulse has presented no evidence raising a genuine issue of material fact that testing of the prototypes under actual conditions of use was necessary because of the nature of the invention.

The second, eighth, ninth, twelfth, and thirteenth factors are (2) the amount of control over the experiment retained by the inventor, (8) who conducted the experiment, (9) the degree of commercial exploitation during the experiment, (12) whether the inventor continually monitored the invention during the testing, and (13) the nature of the contacts made with potential customers. James Heaton avers that the prototypes were at all times under the control of the inventors at PBL or Halo. (Id. at ¶ 8.) Additionally, Heaton states that the Heatons personally performed and continually monitored all testing on the prototypes. (Id. at ¶ 5.) Halo also provides evidence that its first commercial exploitation of the Halo Patents took place weeks later on September 22, 1994. (Countryman Decl. (Doc. #248), Ex 11, Ex. 8 at 320.) Pulse does not provide any evidence creating a genu-

ine issue of material fact with respect to these factors. Pulse does not dispute that the prototypes were at all times under the control of the named inventors, but rather attacks Heaton's credibility by questioning whether the alleged home testing even took place. Again, Pulse does not provide any evidentiary basis for attacking Heaton's credibility. Further, Pulse does not provide any evidence suggesting that Halo made contact with customers or commercially exploited the Halo Patents during testing. Thus, Pulse has presented no evidence raising a genuine issue of material fact as to whether the inventors at all times maintained control over the prototype, conducted and monitored the experiment, and did not exploit the Patents commercially or make contact with potential customers during the testing.

The fourth, seventh, and eleventh factors are (4) the length of the test period, (7) whether records of the experiment were kept, and (11) whether the testing was systematically performed. Jeff Heaton testified that the oven testing was performed as a quick yes or no test regarding whether the new design could withstand high temperatures. (Countryman Decl. (Doc. #248), Ex. 8 at 303-04.) Halo also contends that due to the quick nature and low complexity of the testing, the tests did not take a long time to perform and the Heatons did not keep detailed notes of the experiments. James Heaton states that while the tests were done quickly, they were carried out in a systematic manner, control testing was performed on prior packages, and that he believes he sent a fax to PBL confirming the test results. (12/22/2010 Heaton Decl. at ¶ 4; Countryman Decl. (Doc. #248), Ex. 8 at 313- 315, Ex. 9 at 503-07.)

Pulse notes that Halo has not provided any "contemporaneous evidence" of the testing that corroborates Heaton's declaration. Pulse points out that Halo has not submitted evidence of testing that one would expect, such as notes and records of the experiment, or the fax Heaton allegedly sent to PBL confirming the test results. Viewing the absence of such evidence in the light most favorable to Pulse, there is a genuine issue of material fact that the length of the experiment, the records of the experiment, and the systematic nature of the experiment are indicative of the August 5, 1994 sale being an experimental sale.

The fifth factor is whether payment was made. The invoice in connection with the August 5, 1994 sale indicates that PBL charged Halo $300 for the parts it delivered. (Countryman Decl. (Doc. #248), Ex. 10.) The fact that Halo made "payment does not per se make a section 102(b) bar." Baker Oil Tools, Inc. v. Geo Cann, Inc., 828 F.2d 1558, 1564 (Fed. Cir. 1987). Indeed, "[i]nventors can request another entity's services in developing products embodying the invention without triggering the on-sale bar." Trading Techs. Int'l, Inc., 595 F.3d at 1362. Thus, that payment was made does not, in itself, trigger the on-sale bar under section 102(b).

The sixth factor is whether there is a secrecy obligation involving the use of the invention. Here, there was no explicit vow of secrecy between PBL and Halo regarding the August 5, 1994 transaction. However, as co-inventors of the product, it is not necessary for a confidentiality agreement to be in place regarding this sale. Other courts have found experimental use even where prototypes were given

to outside mechanics where the inventor had "prior working relationships with those mechanics" without an explicit confidentiality agreement. Lisle Corp. v. AJ Mfg. Co., 398 F.3d 1306, 1315 (Fed. Cir. 2005); see also TP Labs, Inc. v. Prof'l Positions, Inc., 724 F.2d 965, 972 (Fed. Cir. 1984). Given Halo's and PBL's relationship as co-inventors, the lack of a formal confidentiality agreement regarding the August 5, 1994 transaction does not raise a genuine issue of material fact that the sale was commercial, rather than experimental.

Viewing all evidence in the light most favorable to Pulse on Halo's motion, Pulse has not presented sufficient evidence to create a genuine issue of material fact that the August 5, 1994 sale was not for experimental purposes. Halo lacks evidence of the testing records and whether these tests were conducted systematically. Further, Halo does not dispute that it paid PBL for the parts. However, these factors are not enough to create a genuine issue of material fact as to the factors as a whole, especially given the co-inventor relationship between Halo and PBL and the fact that the invention was at all times under the control of the inventors. Accordingly, there is not a genuine issue of material fact that the August 5, 1994 sale was for experimental purposes.

Because the Court finds that Pulse has not presented sufficient evidence to create a genuine issue of material fact that the August 5, 1994 sale was experimental, the Halo Patents are not invalid under 35 U.S.C. § 102(b) as a matter of law. Thus, the Court will grant Halo summary judgment of no invalidity based on the August 5, 1994 sale. Accordingly,

summary judgment to Pulse on the same issue will be denied.

B. Priority Date of the '720 Patent

Halo seeks summary judgment that its asserted claims of the '720 Patent are entitled to the August 10, 1995 filing date of the '985 Patent because the asserted claims are a continuation-in-patent which were disclosed in the prior patents. Pulse responds that the only filing date that the claims of the '720 filing date are entitled to is December 27, 1996, the date which the '720 Patent application actually was filed. Pulse contends that "empirical" evidence shows that the specification of the '985 Patent measures 169 lines and the specification of the '720 Patent measures 288 lines, an increase of over 70 percent. Pulse argues that this increase shows that Halo's argument that the only new matter added to the '720 Patent is the reinforcement beam is inaccurate. Pulse also contends that the Patent Office's conclusion as to the priority date of the '720 Patent at least creates a genuine issue of material fact as to the priority date of the '720 Patent. Pulse further contends that sales of products after the August 10, 1994 cut-off afforded the '985 Patent but before the December 27, 1995 cut-off provided for the '720 Patent invalidate the '720 Patent.

A claim of a continuation-in-patent is entitled to the benefit of an earlier filed patent if the claim is disclosed in the parent patent's application. Waldemar Link v. Osteonics Corp., 32 F.3d 556, 558 (Fed. Cir. 1994). However, if the claims contain matters

that were not disclosed in the parent patent, those claims are not entitled to the earlier filing date. Id.

Here, Bottoms declares that the only "new" material in the '720 Patent not covered in the '985 Patent relates to a reinforcement beam, something that is not claimed in Claims 1 or 6 of the '720 Patent. (12/22/2010 Bottoms Decl. at ¶ 8.) Bottoms further declares that Claims 1 and 6 of the '720 Patent recite features that were described in the '985 Patent. (Id.) Halo also provides an analysis of the limitations of Claims 1 and 6 of the '720 showing where they were disclosed in the '985 Patent. (Compare Countryman Decl. (Doc. #248), Exs. 1, 2.) This analysis shows that all limitations of Claims 1 and 6 of the '720 Patent were disclosed in the '985 Patent.

In the face of a comparison of Claims 1 and 6 of the '720 Patent and the prior claims of the '985 Patent, there is no genuine issue of material fact that Claims 1 and 6 of the '720 Patent were disclosed in the '985 Patent. Accordingly, the Court will grant summary judgment in Halo's favor that sales after August 10, 1994 do not invalidate the '720 Patent.

C. Anticipation

A patent also may be invalid because the invention was anticipated by the prior art at the time the patent application was filed. Finisar Corp. v. DirecTV Group, Inc., 523 F.3d 1323, 1334 (Fed. Cir. 2008). "Invalidity by anticipation requires that the four corners of a single, prior art document describe every element of the claimed invention, either expressly or inherently, such that a person of ordinary

skill in the art could practice the invention without undue experimentation." Advanced Display Sys., Inc. v. Kent State Univ., 212 F.3d 1272, 1282 (Fed. Cir. 2000).

Pulse argues that the technology behind the Halo Patents was well known in the industry for many years before Halo filed is patent applications. Pulse contends that Claims 1, 2, and 26 of the '785 Patent are anticipated by the Pulse PE-64309 Product. Pulse provides a chart of Claims 1, 2, and 26 of the '785 Patent that purportedly shows how the PE-64309 Product anticipates these claims. (App. to Mot. for Summ. J. Non-infringement (Doc. #252), Ex. 69.) Pulse argues that there is no genuine issue of material fact that the subject matter covered by the Halo Patents was anticipated and therefore summary judgment in its favor is appropriate. Halo disputes only that the PE-64309 Product satisfies the "molded within" requirement of Claims 1, 2, and 26. Therefore, the Court will limit its analysis to whether the PE-64309 Product contains terminal pins that are molded within the sidewall.

There is conflicting testimony regarding whether the plurality of terminal pins are molded within the package. (Compare Reed Decl. (Doc. #252), Exs. 41 ["Lint Decl."] with Countryman Decl. (Doc. #267) at 276:18.) It is unclear from the drawings and product materials list for the PE-64309 product whether the PE-64309 contains a plurality of terminal pins. (Reed Decl. (Doc. #252), Exs. 53-55.)

Viewing all evidence in the light most favorable to Halo, Pulse has not met its burden of showing

no genuine issue of material fact remains as to whether the PE-64309 Product contains all of the limitations of Claims 1, 2, and 26 of the '785 Patent such that a person of ordinary skill in the art could practice the invention. Accordingly, the Court will deny Pulse summary judgment on the issue of anticipation.

D. Obviousness

Under 35 U.S.C. § 103(a), a patent is invalid if "the differences between the subject matter sought to be patented and the prior art are such that the subject matter as a whole would have been obvious at the time the invention was made to a person having ordinary skill in the art to which said subject matter pertains." Thus, when a "patent simply arranges old elements with each performing the same function it had been known to perform and yields no more than one would expect from such an arrangement, the combination is obvious." KSR Int'l. Co. v. Teleflex Inc., 550 U.S. 398, 417 (2007) (quotation omitted). Inquiries relevant to obviousness include; "(1) the scope and content of the prior art; (2) the level of ordinary skill in the prior art; (3) the differences between the claimed invention and the prior art; and (4) objective evidence of nonobviousness." Green Edge Enter., LLC v. Rubber Mulch Etc., LLC, 620 F.3d 1287, 1298 (Fed. Cir. 2010) (quotation omitted). However, "[t]he genius of invention is often a combination of known elements which in hindsight seems preordained. To prevent hindsight invalidation of patent claims, the law requires some teaching, suggestion or reason to combine cited references." McGinley v. Franklin Sports, Inc., 262 F.3d 1339, 1351 (Fed.

Cir. 2001) (quotation omitted). Further, "when the prior art teaches away from combining certain known elements, discovery of a successful means of combining them is more likely to be nonobvious." KSR, 550 U.S. at 416.

Pulse contends that the technology behind Halo's Patents has been available for years prior to Halo's application and that Halo merely combined known elements in predictable and conventional ways, as such Halo does not deserve patent protection. Pulse contends that the Asserted Halo Claims are obvious when referencing prior art in the Pulse PE-64309 product and the Akachi reference. Pulse further argues that most of the Asserted Halo Claims are found in both the Pulse PE-64309 and the Akachi reference, and for those that are not, it would have been obvious to a person of ordinary skill at the time of the invention to modify the Pulse PE-64309 and/or the Akachi reference. The main categories of claims which Pulse contends are obvious from prior art are notched/hour-glass shaped posts, standoffs, posts substantially parallel to sidewalls, plurality of toroid transformers, transformers retained inside the package by soft silicone material, and terminal pins extending in a gull wing fashion outwardly from the sidewall.

Halo responds that the PE-64309 part and Akachi reference each are missing multiple limitations present in the Halo Patents. Halo contends that there would be no reason for someone of ordinary skill in the art to combine the PE-64309 and Akachi reference with each other and/or other elements disclosed in the Halo Patents. Further, Halo argues that

the prior art at the time of its patents taught away from the combinations present in its patents and in any event, there are genuine issues of material fact regarding obviousness and summary judgment is inappropriate.

Viewing the evidence in the light most favorable to Halo, there is a genuine issue of material fact as to whether the technology behind the Halo Patents was obvious to one of ordinary skill in the prior art at the time of the invention. Halo has presented sufficient evidence, in the form of the Bottoms declaration, industry papers, and a Pulse white paper, to raise genuine issues of material fact that the prior art was teaching away from several key components of the Halo Patents. (See 1/13/2011 Bottoms Decl. at ¶¶ 30, 80, 81, 86-88, 90, 99; Countryman Decl. (Doc. #267), Exs. 13-15.) Further, Halo provided evidence that Pulse used features such as a standoff in some of its earlier products yet did not use a standoff in the PE-64309 to prevent problems of cracking, which later were solved by the developments of the Halo Patents. (1/13/2011 Bottoms Decl. at ¶ 82.) This evidence creates a genuine issue of material fact that the combination of prior art present in the Halo Patents was not obvious.

Halo also presented sufficient secondary objective indicia of non-obviousness to raise a genuine issue of material fact that the technology covered by the Halo Patents was not obvious. Halo further presented evidence of the commercial success of the covered products, that the invention fulfilled a long-felt need, that other attempts at solving the cracking problem had failed, and that industry competitors

are willing to license the technology from Halo as evidence of non-obviousness. (Countryman Decl. (Doc. #263), Ex. 40 at ¶ 40;1/13/2011 Bottoms Decl. at ¶ 100-01; Countryman Decl. (Doc. #267), Ex. 15.) Further, evidence that some potential customers were concerned about the novelty of the products using the technology covered by the Halo Patents is further evidence of nonobviousness. (Countryman Decl. (Doc. #263), Ex. 36.) Accordingly, the Court will deny Pulse's motion for summary judgment of invalidity based on obviousness.

V. EQUITABLE ESTOPPEL, LACHES, and FAILURE TO MARK (Doc. #249)

A. Equitable Estoppel

"Equitable estoppel is an equitable defense to infringement and may serve as an absolute bar to a patentee's claim of infringement." Scholle Corp. v. Blackhawk Molding Co., Inc., 133 F.3d 1469, 1471 (Fed. Cir. 1998). To support a defense of equitable estoppel in the patent context, a defendant must show:

> (1) the patentee, through misleading conduct, led the alleged infringer to reasonably believe that the patentee did not intend to enforce its patent against the infringer; (2) the alleged infringer relied on that conduct; and (3) due to its reliance, the alleged infringer would be materially prejudiced if the patentee were permitted to proceed with its charge of infringement.

Aspex Eyewear Inc. v. Clariti Eyewear, Inc., 605 F.3d 1305, 1310 (Fed. Cir. 2010). Equitable estoppel may arise where the misleading conduct is essentially inaction on the part of the patentee, "[h]owever, plaintiff's inaction must be combined with other factors respecting the relationship or contacts between the parties to give rise to the necessary inference that the claim against the Defendants is abandoned." A.C. Aukerman Co. v. R.L. Chaides Constr. Co., 960 F.2d 1020, 1042 (Fed. Cir. 1992). A party threatening immediate or vigorous enforcement of its patent rights then delaying its claim for an unreasonably long time may be estopped from pursuing its claim. Meyers v. Asics Corp., 974 F.2d 1304, 1309 (Fed. Cir. 1992).

An alleged infringer ignoring or giving little weight to a patentee's offer to negotiate licenses may be evidence that the alleged infringer did not rely on the patentee's conduct. Id. Prejudice because of reliance may be either economic or evidentiary. Economic prejudice "may be shown by a change of economic position flowing from actions taken or not taken by the patentee." Aspex, 605 F.3d at 1312. However, the alleged infringer must prove that any increased expenditure is related to the actions taken by the patentee, and not merely a business decision. Gasser Chair Co., Inc. v. Infanti Chair Mfg. Corp., 60 F.3d 770, 774 (Fed. Cir. 1995). Evidentiary prejudice arises when key witnesses and/or documentary evidence is lost or witnesses' memories lessen because of the plaintiff's unreasonable delay. Meyers, 974 F.2d at 1308. When "deciding whether to bar the suit on estoppel grounds, the court must consider all evidence relevant to the equities." Aspex, 605 F.3d at 1310.

"[E]quitabble estoppel is not limited to a particular factual situation nor subject to resolution by simple or hard and fast rules." Aukerman, 960 F.2d at 1041.

Pulse argues that it was misled by Halo's conduct of sending two letters to Pulse not explicitly accusing Pulse of infringement at times when Pulse contends Halo already believed Pulse was infringing. Pulse states that it relied on Halo's misleading conduct by actively expanding the accused product lines. Further, Pulse contends that it has suffered evidentiary prejudice as a result of Halo's allegedly misleading conduct because one of the named inventors of the Halo Patents died two years ago and another inventor is now physically incapacitated and unable to testify. Pulse further states that the other available inventors are now unable to recall important discussions relating to the case because those discussions occurred so long ago.

Halo responds that its conduct was not misleading in any way. Halo argues that Pulse has not shown it relied on any of Halo's activity or inactivity. Further, Halo contends that Pulse has not shown any material prejudice as a result of Halo's actions or inactions. Halo states that there has been no change in Pulse's economic position over the alleged period of delay. Additionally, Halo contends that Pulse has failed to identify any evidentiary prejudice as a result of Halo's activity or inactivity. Halo states that Pulse had the opportunity to depose the inventors it now complains are unable to testify, but did not do so.

Halo President James Heaton states that Halo was only "aware of the possibility Pulse was infringing" its patents at the time it sent the licensing letters to Pulse. (MSJ Estoppel, Ex. 5 ["7/20/2010 James Heaton Dep."] at 179-181.) Pulse "continued to actively expand its accused product lines" after receipt of the letters, and Pulse's sales of the accused products increased in the years after receiving the letters from Halo's counsel. (Decl. of Victor Aldaco (Doc. #252), Ex. 32 ["Aldaco Decl."] at ¶ 15; MSJ Estoppel, Ex. 28.) However, had Pulse believed that Halo intended to assert an infringement claim, Pulse "could have placed more emphasis on alternatives to the accused products," filed for a declaratory judgment, or taken measures to preserve documents in preparation for the present lawsuit. (Aldaco Decl. at ¶¶ 13-15.) No one at Pulse made a conscious decision that it was permissible to continue selling open header surface mounted transformer products after Pulse received the letters from Halo's counsel. (Countryman Decl. (Doc. #260), Ex. 32 ["Munson Dep."] at 282-83.) Rather, Pulse has contended that it "always has believed in good faith that its activities do not constitute infringement of any valid asserted claims of Halo's patents-in-suit." (Countryman Decl. (Doc. #269), Ex. 4.)

One of the named inventors of the Halo Patents, Mr. Loh, died in 2008, and another inventor, Mr. Lok, is now physically incapacitated and unable to testify. (MSJ Estoppel, Ex. 15 at 45.) Inventor Jeff Heaton testified that he is unable to recall certain things related to the development of the Halo Patents. (Id. at 131-143.)

When viewing evidence in the light most favorable to Halo, Halo has presented sufficient evidence raising a genuine issue of material fact as to whether Halo should be estopped. Turning to the first factor of equitable estoppel, there is a genuine issue of material fact as to whether Halo's conduct was misleading and whether Halo led Pulse reasonably to believe that Halo did not intend to enforce its patents against Pulse. The July and August 2002 letters informed Pulse of the Halo Patents, and the August 2002 letter alerted Pulse only to the possibility that Pulse may be infringing. Halo then waited approximately four years before filing the present infringement action. A reasonable jury could find that the letters do not rise to the level of threatening vigorous enforcement then delaying bringing an action. The letters invite Pulse to enter into licensing negotiations but do not explicitly accuse Pulse of infringement. The letters also imply that Halo had yet to thoroughly investigate whether the Pulse products infringed its patents, and that if an infringement action were to come, it likely would take some time for the investigation to be conducted. Additionally, there is nothing in the relationship or contacts between Pulse and Halo that reasonably would indicate to Pulse that Halo did not intend to pursue its claims.

Additionally, there is a genuine issue of material fact that Pulse relied on Halo's activity and/or inactivity. There is evidence that no one at Pulse made a conscious decision to continue selling the accused products. Lack of a conscious decision to continue selling the accused products is evidence that Pulse did not rely on Halo's actions. Similarly, Halo presented evidence that Pulse always believed it was

not infringing on the Patents, evidence which creates a genuine issue of material fact of whether Pulse relied on Halo's alleged misrepresentation that it would not bring suit. Further, Pulse ignoring Halo's attempts to negotiate license agreements, under Meyers, is evidence that Pulse did not rely on Halo's conduct. All evidence taken together and viewed in the light most favorable to Halo raises genuine issues of material fact as to whether Pulse relied on Halo's conduct.

Additionally, there is a genuine issue of material fact as to whether Pulse would be materially prejudiced if Halo is allowed to continue with its infringement claim. While "could have" placed greater emphasis on alternative products had it not been misled by Halo's conduct, Pulse does not provide evidence that, but for Halo's actions, it would have focused on alternative products. Further, Pulse's sales of the accused products increased after Halo's counsel sent letters to Pulse informing them of the possibility of infringement. A reasonable jury could infer that Pulse would have taken its course of action regardless of any of Halo's conduct. This raises a genuine issue of material fact as to whether Pulse suffered economic prejudice as a result of Halo's conduct.

Likewise, there is a genuine issue of material fact that Pulse suffered evidentiary prejudice as a result of Halo's alleged misleading conduct. The fact that Pulse has not deposed the available Hong Kong inventor creates a genuine issue of material fact as to whether it would have deposed the other two Hong Kong inventors had they been available. Additional-

ly, the two unavailable Hong Kong inventors were available at the commencement of the infringement suit and Pulse did not make arrangements to depose them. Although Pulse contends that it did not take efforts to preserve evidence potentially related to the infringement claims, it does not state what evidence it failed to maintain and how the failure to maintain the evidence is related to Halo's alleged conduct.

Viewing all evidence in the light most favorable to Halo, there are genuine issues of material fact as to whether Halo should be equitably estopped from asserting its patent claims. There is a genuine issue of material fact that Halo's conduct was misleading. There are also genuine issues of material fact that Pulse relied on Halo's allegedly misleading conduct and that it suffered economic or evidentiary prejudice because of its reliance. Accordingly, summary judgment on the issue of equitable estoppel is inappropriate and will be denied.

B. Laches

"The defense of laches is committed to the sound discretion of the district court." Aukerman, 960 F.2d at 1032. To prove laches, a defendant must show that the plaintiff delayed filing suit for an "unreasonable and inexcusable length of time after the plaintiff knew or reasonably should have known of its claim against the defendant; and . . . the delay resulted in material prejudice or injury to the defendant." Wanlass v. Gen. Elec. Co., 148 F.3d 1334, 1337 (Fed. Cir. 1998). "The length of time which may be deemed unreasonable has no fixed boundaries but rather depends on the circumstances." Aukerman,

960 F.2d at 1032. Generally, "[t]he Circuit has pronounced a three or four-year delay unreasonable only when that delay was accompanied by extraneous improper tactics or misleading conduct by the plaintiff." IXYS Corp. v. Advanced Power Tech., Inc., 321 F. Supp. 2d 1156, 1163 (N.D. Cal. 2004) (citing MCV, Inc. v. King-Seeley Thermos Co., 879 F.2d 1568, 1572 (Fed. Cir. 1989); Rosemount, Inc. v. Beckman Instruments, Inc., 727 F.2d 1540, 1550 (Fed. Cir. 1984)). For example, the plaintiff co-inventor telling the patentee that he had no interest in possessing rights in the patent, then later bringing suit to be named on the patent was misleading conduct. MCV, 879 F.2d at 1572. A delay of more than six years raises a presumption that the delay is unreasonable. Wanlass, 148 F.3d at 1337. Material prejudice may be established by showing economic or evidentiary prejudice. Id.

Pulse argues that Halo brought suit after delaying an unreasonable and inexcusable amount of time. As discussed above, Pulse argues it has suffered evidentiary and economic prejudices as a result of Halo's alleged delay in bringing suit. Halo responds that the alleged delay was four years and Pulse is not entitled to the presumption of laches. Halo also states that the alleged delay was both reasonable and excusable. Additionally, Halo contends that Pulse has not shown evidentiary or economic prejudice.

James Heaton testified that he believed Pulse to be infringing on the Halo Patents at the time the letters were sent. (7/20/2010 James Heaton Dep. at 179-180.) Halo brought suit in March 2007, over four

years after Halo allegedly became aware of the alleged infringing activity. James Heaton testified that Halo was facing extreme financial pressures from 2002-2007 and could not afford to pursue a lawsuit. (Id. at 181.) Heaton also states that at this time his wife was terminally ill and he was focused on caring for her. (Id. at 182.)

Viewing all evidence in the light most favorable to Halo, Halo has presented sufficient evidence creating a genuine issue of material fact regarding laches. As an initial matter, Pulse is not entitled to the presumption of laches because the delay was approximately four years. Additionally, Pulse has not shown that the four year delay was accompanied by misleading conduct on Halo's part. The letters Halo sent do not rise to the level of misleading conduct. The letters informed Pulse of the possibility of infringement. Additionally, there are genuine issues of material fact as to whether Pulse was prejudiced by the delay. A reasonable jury could find that because Pulse has not taken steps to depose the remaining available Hong Kong inventor, and did not depose the unavailable inventors in the roughly two years that they were available, that Pulse would not have deposed the unavailable inventors. This raises a genuine issue of material of fact regarding Pulse suffering evidentiary prejudice. Further, as discussed above, there are genuine issues of fact as to whether Pulse would have taken the same actions regarding its product focus and hence whether Pulse suffered economic damages. Accordingly, summary judgment on laches is inappropriate and will be denied.

C. Failure to Mark

Title 35 U.S.C. § 287 limits damages a patentee is able to recover to those damages associated with products marked by the patent number on the product, or those damages occurring after an alleged infringer is on notice of the patented product. Compliance with the marking portion of 35 U.S.C. § 287 is achieved when the "patentee consistently mark[s] substantially all of the patented product." Nike, Inc. v. Wal-Mart Stores, Inc., 138 F.3d 1437, 1446 (Fed. Cir. 1998). Marking ninety-five percent of relevant products has been deemed sufficient to comply with the marking statute. Maxwell v. J. Baker, Inc., 86 F.3d 1098, 1112 (Fed. Cir. 1996); see also Funai Elec. Co., Ltd. v. Daewoo Elecs. Corp., 616 F.3d 1357, 1374 (Fed. Cir. 2010). Where an item is too small to affix a patent number to the product itself, a patentee may affix a label to the package which carries the product. Sessions v. Romadka, 145 U.S. 29, 50 (1882).

Pulse argues that none of the products Halo sells physically are marked with any of the Halo Patent numbers. Halo responds that it marks its products' packaging and that Pulse has not provided any evidence that indicates that Halo consistently failed to mark substantially all of its products. Jeff Heaton declares that Halo's products are too small to physically mark the products themselves, and instead marks the packaging with the associated patent numbers. (Pl's. Resp. to MSJ Estoppel (Doc. #258), Ex. 1 ["1/13/2011 Jeff Heaton Decl."] at ¶ 3; 7/20/2010 James Heaton Dep. at 172-73.) Halo employs several different ways of packaging its products including tape-and-reel, shipping tubes, and trays. (MSJ Estoppel, Ex. 14.) Halo marks the patents on the packaging, including all reels, vacuum sealed

bags containing reels, all boxes in which the bagged reels are placed, all shipping cartons in which reels are placed, all bags in which shipping tubes are placed, all shipping cartons in which trays are placed, and on the data sheets for all products with the exception of Thin Net Transceiver ("TNT") modules. (1/13/2011 Jeff Heaton Decl. at ¶ 4; 7/21/2010 Jeff Heaton Dep. at 225-29; MSJ Estoppel, Ex. 9 ["11/19/2010 Jeff Heaton Dep."] at 344-386, 658-660.) Further, several photos of Halo packaging material show the packages marked with the associated patent numbers. (Countryman Decl. (Doc. #269), Exs. 20, 22, 23.)

Halo sells TNT modules but does not mark them. (11/19/2010 Jeff Heaton Dep.) The patent marking convention referred to in the email does not apply to modules, including the TNT modules. (MSJ Estoppel, Ex. 11.) Halo does not mark patent numbers on the packaging of TNT modules because the patented parts of the TNT modules are not visible without looking inside the module. (1/13/2011 Jeff Heaton Decl. at ¶ 3.) The amount of TNT modules sold by Halo represent approximately one percent of Halo products sold. (Id. at 7.)

The evidence presented by Halo raises a genuine issue of material fact as to whether Halo consistently marked substantially all of its products. A reasonable jury could find that Jeff Heaton's declaration shows that Halo's products are to small to be marked themselves, and therefore that marking the products' packaging complies with § 287. Additionally, the declarations and testimony of Jeff and James Heaton creates a genuine issue of material fact as to whether

Halo marks the packaging of substantially all of its products. Halo provides sufficient evidence to raise a genuine issue of material fact that the TNT modules, which it does not mark, constitute only one percent of the total number of products sold. A reasonable jury could conclude that Halo marks the roughly ninety-nine percent of remaining products, which would satisfy the requirements of marking substantially all of its products. Accordingly, there is a genuine issue of material fact that Halo marked substantially all of its products in compliance with 35 U.S.C. § 287. The Court will deny Pulse summary judgment on this issue.

VI. SALES OUTSIDE OF NORTH AMERICA (Doc. #251)

United States patent law offers protection "only domestically and does not extend to foreign activities." Microsoft Corp. v. AT & T Corp., 550 U.S. 437, 455 (2007) (quotation omitted). Title 35 U.S.C. § 271(a) makes it an act of infringement to make, use, import, offer to sell, or sell any patented invention within the United States without the authority of the patent holder. "It is well established that the reach of section 271(a) is limited to infringing activities that occur within the United States." MEMC Elec. Materials, Inc. v. Mitsubishi Materials Silicon, 420 F.3d 1369, 1375 (Fed. Cir. 2005). "Mere knowledge that a product sold overseas will ultimately be imported into the United States is insufficient to establish liability under section 271(a)." Id. at 1377. Further, "the location of the contemplated sale controls whether there is an offer to sell within the United States." Transocean Offshore Drilling,

Inc. v. Maersk Contractors USA, Inc., 617 F.3d 1296, 1309 (Fed. Cir. 2010).

Under 35 U.S.C. § 271(b) one who "actively induces infringement of a patent shall be liable as an infringer." "[T]o succeed on a claim of inducement, the patentee must show, first that there has been direct infringement, [and] second, that the alleged infringer knowingly induced infringement and possessed specific intent to encourage another's infringement." Minn. Mining & Mfg. Co. v. Chemgue, Inc., 303 F.3d 1294, 1304-05 (Fed. Cir. 2002).

Induced infringement "requires knowledge that the induced acts constitute patent infringement." Global-Tech Appliances, Inc. v. SEB S.A., 131 S. Ct. 2060, 2068 (2011). The knowledge element can be satisfied if it is shown that the defendant was "willfully blind" to the existence of a patent. Id. at 2071. "While proof of intent is necessary, direct evidence is not required; rather, circumstantial evidence may suffice." MEMC, 420 F.3d at 1378 (quotation omitted). A manufacturer providing e-mail communications and other technical support to third parties in the United States, even though the manufacturer sold the product to a different party abroad, creates a genuine issue of material fact that the manufacturer intended to induce infringement. MEMC, 420 F.3d at 1379-80. Moreover, failure of a manufacturer to obtain an opinion of counsel that a manufacturer's activities are not inducing infringement may be probative of a manufacturer's intent to induce infringement. Broadman Corp. v. Qualcomm Inc., 543 F.3d 683, 699 (Fed. Cir. 2008).

A. Direct Infringement

Pulse argues that Halo has failed to show that it is liable for direct infringement on the majority of its sales of accused products. Pulse states that the majority of the accused products were manufactured, ordered, invoiced, and shipped outside of North America. Pulse argues it should not be liable for infringement based on sales outside of North America. Further, Pulse argues that it has sold relatively few accused products to Cisco and that while it does engage in periodic pricing discussions with Cisco in the United States, these talks were merely forecasts and were not guarantees that Pulse would receive these orders from Cisco contract manufacturers.

Halo argues that Pulse's discussions with Cisco regarding pricing of the accused products took place in the United States and that these discussions constitute offers for the purposes of § 271(a). Further, Halo argues that the prices paid by Cisco contract manufacturers are almost exclusively the same as those negotiated by Cisco, indicating that sales to contract manufacturers were dependent on the offers to sell Pulse made to Cisco in the United States. Accordingly, Halo argues that Pulse directly infringes on the Halo Patents when it sells to Cisco contract manufacturers, even if delivery of such products occurs abroad. Halo also argues that even though accused products sold to manufacturers other than Cisco are delivered abroad, the negotiations regarding these sales often take place in the United States and hence the sales themselves take place in the United States.

Of the $250.6 million in accused products sold by Pulse since March 15, 2001, $210.8 million was shipped outside of North America. (App. to Defs.' Mot. for Summ. J. No Liability (Doc. #253), Exs. 1, 2.) Since at least March 15, 2001, all of the accused products have been manufactured in China. (Id., Ex. 5 ["8/20/2009 Carpenter Dep."] at 137; Decl. of John Carpenter (Doc. #253) ["Carpenter Decl."] at ¶ 6.) Further, since at least March 15, 2001, all purchase orders for accused products that were shipped outside of North America were received at Pulse's sales offices outside of North America. (Id. ¶¶ 6-7.) All accused products eventually shipped to Pulse's customers outside of North America were at no point, in transit or otherwise, in the United States. (Id. at ¶ 8.)

Pulse has sold relatively few accused products to Cisco and its subsidiaries. (App. MSJ No Liability (Doc. #253), Ex. 7 at 94-95, 127-28.) Cisco negotiates the prices that its contract manufacturers pay to Pulse for the accused products. (Id. at 45-47, 53-54, 120-122.) For each Cisco contract manufacturer (Hon-Hai/Foxconn, Flextronics, Celestica, and Jabil), the manufacture, invoicing, shipping, and delivery took place outside of the United States. (Carpenter Decl. at ¶¶ 19-22.)

Pricing discussions with Cisco take place from the Pulse sales office in San Diego, California. (Countryman Decl. (Doc. #260), Ex. 3 ["Vasquez Dep."] at 37, 50.) Pulse engineers have worked with Cisco engineers in the early stages of Cisco's design in Cisco's locations in Austin, Texas and San Jose, California. (Id. at 169-70.) Additionally, Pulse pro-

vides technical support for the accused products to Cisco, among other customers, in the United States. (Countryman Decl. (Doc. #260), Ex. 1 ["Carpenter Dep."] at 314-321; Ex. 12 ["Benjamin Dep."] at 65-71.) A Pulse employee attended regular sales meetings at Cisco offices as a Pulse representative discussing product pricing, among other topics. (Vasquez Dep. at 82-83.) Further, another Pulse employee testified that he has attended various meetings with Cisco executives in the United States and that if there is a problem with parts Cisco obtained from Pulse, Pulse provides technical support in the United States to attempt to rectify the problem. (Benjamin Dep. at 65-66, 71-72.)

Pulse has provided evidence that of the $250.6 million in accused products sold by Pulse since March 15, 2001, the entirety was manufactured outside of North America, and $210.8 million was shipped outside of North America. Halo does not provide any evidence disputing that the products were manufactured overseas or the amount of products shipped outside of North America. Rather, Halo argues that because some pricing discussions took place in the United States, Pulse "offered to sell" the accused products in the United States. It is well settled that liability under § 271(a) requires infringing activity within the United States. MEMC, 420 F.3d at 1375. Further, under Transocean, it is not the location of the offer to sell, but rather the location of the contemplated sale that determines whether an offer to sell is made in the United States. Although Halo has provided evidence indicating that pricing discussions took place between Pulse and its customers in the United States, Pulse has provided evidence

that the majority of its accused products were manufactured and shipped outside of the United States. Halo does not provide sufficient evidence that Pulse shipped these products into the United States. Accordingly, there is not a genuine issue of material fact that for these products, Pulse did not directly infringe the Halo patents. Therefore, Pulse is not liable for direct infringement based on its sales of accused products outside of the United States.

B. Indirect Infringement

Pulse argues that Halo has failed to present evidence that Pulse is liable for indirect infringement under § 271(b). Pulse argues that Halo has not presented any evidence which a reasonable jury could find that any of Pulse's customers directly infringed on the Halo Patents. Further, Pulse contends that it has no knowledge of where the end products incorporating accused Pulse products end up, thus, even if Halo were able to show direct infringement by some of Pulse's customers, Halo cannot show that Pulse had knowledge or intended to induce the alleged infringement.

Halo responds that there is, at a minimum, a genuine issue of material fact that Pulse's sales and offers to customers where delivery occurred abroad indirectly infringe on the Halo Patents. Halo argues that Pulse knowingly induces others to ship accused products back into the United States, making Pulse guilty of indirect infringement. Halo states that there is ample evidence that some of the accused Pulse products that are shipped outside of the United States are eventually sold, offered for sale, used,

and imported into the United States whether as stand alone products or incorporated into end products that are sold in the United States.

Pulse customers do not provide Pulse with information about where the end products incorporating accused Pulse products ultimately end up. (Carpenter Decl. at ¶ 10.) The accused Pulse products are components of computers, servers, internet routers, switches, and hubs. (Carpenter Dep. at 345-348.) Twenty-four to thirty-six percent of computers sold worldwide during the relevant time period were sold in the United States. (Countryman Decl. (Doc. #260), Ex. 39.) Pulse is aware that its customers incorporate Pulse products into products delivered to manufacturers such as Lucent, Apple, Avaya, Canon, Cisco, Dell, HP, IBM, Intel, Motorola, NEC, and Nortel for use in end products. (Carpenter Dep. at 47-48, 75-76, 83, 91, 97, 241-243, 287-88.) The annual sales reports from these manufacturers show that the yearly percentage of end products sold in the United States during the relevant period ranged from 7.1-66.0 percent. (Countryman Decl. (Doc. #267), Exs. 26-36.) A Pulse employee also testified that he believed at least some Cisco end products incorporating the accused products come back to the United States. (Carpenter Dep. at 351-54.) Pulse did not make efforts to obtain a legal opinion that its products did not infringe on the Halo Patents. (Munson Dep. at 282-83.)

Pulse has visited at least fifty U.S.-based entities to promote its accused products. (Carpenter Dep. at 315-16.) Pulse employees gave on-site technical presentations to customers in the United States to

promote use of the accused products. (Id. at 318-21.) Further, Pulse provides customer service support to customers in the United States. (Id. at 337-43.)

Indirect infringement under § 271(b) requires only an act of infringement by a third party and knowing inducement and intent to encourage infringement. Halo has presented evidence that a substantial number of the types of end-products into which Pulse's customers incorporate accused Pulse products eventually are sold in the United States. While Halo does not provide direct evidence about whether, and the number of, accused Pulse products that end up in the United States, Pulse's corporate representative testified that he believed at least some of the accused products end up in the United States. This type of circumstantial evidence has been held to be substantial evidence of indirect infringement. Lucas Aerospace, Ltd. v. Unison Indus., L.P., 899 F. Supp. 1268, 1286-87 (D. Del. 1995) (evidence that the defendants supplied fifty percent of a third party's requirements for particular engine component coupled with evidence that substantial percentage of third party's engines made their way to the United States was sufficient to create a genuine issue of material fact regarding indirect infringement). Accordingly, based on the evidence provided by Halo, a reasonable jury could conclude that Pulse's customers infringe on Halo's patents by bringing accused products into the United States.

To survive summary judgment of no liability for indirect infringement, Halo also must also show there is a genuine issue of material fact as to whether Pulse knowingly induced infringement and pos-

sessed specific intent to encourage infringement. Here, Halo provides evidence that Pulse did not obtain an opinion of counsel that its actions did not induce infringement, even after being alerted to the potentiality of infringement by letters from Halo's counsel. Evidence of this type has been found sufficient to support a jury finding inducement of infringement. Broadman, 543 F.3d at 699. Further, Halo presented evidence that Pulse actively promotes its accused products to end users in the United States who purchase products incorporating the accused products from Pulse's customers. Halo offers evidence that Pulse employees conduct site visits and give technical presentations to end users in the United States. Further, Halo provides evidence that Pulse offers customer support to, and makes accommodations to the manufacturing process for, end users in the United States. Evidence of this nature has been deemed sufficient to permit a reasonable jury to find inducement of infringement. MEMC, 420 F.3d at 1379. Additionally, Pulse's corporate witness testified to his belief that end products containing the accused Pulse products are offered for sale in the United States. A reasonable jury could conclude that the support and other actions taken by Pulse with respect to end users in the United States are intended to induce infringement. Accordingly, Halo has presented sufficient evidence creating a genuine issue of material fact that Pulse indirectly infringed on Halo's patents under § 271(b). The Court, therefore, will deny summary judgment on this matter.

VII. MOTION TO STRIKE PULSE'S NEW SUMMARY JUDGMENT IN REPLY AND TO AMEND THE PARTIES'

SEPTEMBER 2010 STIPULATION
(Doc. #279)

In its Reply in connection with its Motion for Summary Judgment of Invalidity, Pulse raises the argument that Halo's allegations that the PE-64309 part, which was on sale before the Halo Patents were filed, infringes on the Halo Patents, demonstrates that the Halo Patents are invalid as a matter of law. Halo filed the present motion to strike alleging that the PE-64309 was included on the Stipulated Representative Products List in error, and further, that Pulse should not be allowed to raise an argument for the first time in reply. Halo requests that the Court strike this argument from Pulse's Reply and amend the Parties' Stipulation to remove the PE-64309 part from the list of accused Pulse products. Pulse argues that it always has alleged that the PE-64309 invalidates the Halo Patents and that Halo should not be able to reap the benefits, but not suffer the detriments of, the efficiencies created by the Stipulated Representative Products List.

The Court finds that it is in the interests of justice to strike Pulse's argument and to remove the PE-64309 part from the accused product list. A party may not raise an argument for the first time in a reply brief. Graves v. Arpaio, 623 F.3d 1043, 1048 (9th Cir. 2010). Further, given the thousands of products on the Stipulated Representative Product List, the potential for inadvertent errors is great. Additionally, the Court's ruling does not unfairly prejudice Pulse because Pulse still will be able to argue that the PE-64309 reads on all of the Asserted Halo Claims and thus the Halo Patents are invalid. How-

ever, Pulse will not be able to rely on Halo's erroneous inclusion of the PE-64309 part on the accused products list to satisfy its burden as a matter of law.

VIII. CONCLUSION

IT IS THEREFORE ORDERED that Defendants' Motion for Summary Judgment of No Infringement (Doc. #239) is hereby DENIED.

IT IS FURTHER ORDERED that Plaintiff's Motion for Summary Judgment of Infringement (Doc. #245) is hereby GRANTED in part and DENIED in part. Plaintiff's Motion is GRANTED with respect to products represented by the H0022 product with respect to Claim 1 of the '720 Patent only. Plaintiff's Motion is denied in all other respects.

IT IS FURTHER ORDERED that Plaintiff's Motion for Summary Judgment of No Invalidity (Doc. #240) is hereby GRANTED.

IT IS FURTHER ORDERED that Defendants' Motion for Summary Judgment of Invalidity (Doc. #250) is hereby DENIED.

IT IS FURTHER ORDERED that Defendants' Motion for Summary Judgment of Equitable Estoppel, Laches, and Failure to Mark (Doc. #249) is hereby DENIED.

IT IS FURTHER ORDERED that Defendants' Motion for Summary Judgment of No Liability for Sales Activity Outside of North America (Doc. #251) is hereby GRANTED in part and DENIED in part.

Defendants' Motion is granted with respect to direct infringement for products sold outside of North America and denied in all other respects.

IT IS FURTHER ORDERED that Plaintiff's Motion to Strike and to Amend the Parties' Stipulation (Doc. #279) is hereby GRANTED. The parties' Stipulated Representative Products List (Doc. #217) is hereby amended to remove the PE-64309 product.

DATED: September 6, 2011

PHILIP M. PRO
United States District
Judge

APPENDIX D

UNITED STATES COURT OF APPEALS FOR THE FEDERAL CIRCUIT

HALO ELECTRONICS, INC.
Plaintiff-Appellant,

v.

PULSE ELECTRONICS, INC., PULSE ELECTRONICS CORPORATION,
Defendants-Appellees,

2013-1472, 2013-1656

Appeal from the United States District Court for the District of Nevada in No. 07-CV-0331, Judge Philip M. Pro.

ON PETITIONS FOR PANEL REHEARING AND REHEARING EN BANC

CRAIG E. COUNTRYMAN, Fish & Richardson P.C., San Diego, CA, filed a petition for rehearing en banc for plaintiff-appellant. With him on the petition were MICHAEL J. KANE and WILLIAM R. WOODFORD, Minneapolis, MN.

MARK L. HOGGE, Dentons US LLP, Washington, DC, filed a combined petition for panel rehearing and rehearing en banc for defendants-cross appellants. With him on the petition were SHAILENDRA K. MAHESHWARI, CHARLES R. BRUTON, and RAJESH C. NORONHA.

JOHN D. HAYNES, Alston & Bird LLP, Atlanta, GA, for amici curiae Nokia Corporation and Nokia USA Inc. With him on the brief was PATRICK J. FLINN.

ANDREW S. BALUCH, Foley & Lardner LLP, Washington, DC, for amicus curiae Louis J. Foreman. With him on the brief was BRENDYN M. REINECKE, Madison, WI.

Before PROST, Chief Judge, NEWMAN, LOURIE, DYK, MOORE, O'MALLEY, REYNA, WALLACH, TARANTO, CHEN, and HUGHES Circuit Judges.

TARANTO, Circuit Judge, with whom REYNA, Circuit Judge, joins, concurs in the denial of the petition for rehearing en banc.

O'MALLEY, Circuit Judge, with whom HUGHES, Circuit Judge, joins, dissents from the denial of the petition for rehearing en banc.

PER CURIAM.

ORDER

A petition for rehearing en banc was filed by appellant Halo Electronics, Inc., and a response

thereto was invited by the court and filed by cross-appellants Pulse Electronics, Inc. and Pulse Electronics Corporation. A combined petition for panel rehearing and rehearing en banc was filed by cross-appellants Pulse Electronics, Inc. and Pulse Electronics Corporation. The petitions for rehearing and response were referred to the panel that heard the appeal, and thereafter, to the circuit judges who are authorized to request a poll of whether to rehear the appeal en banc. A poll was requested, taken, and failed.

Upon consideration thereof,

IT IS ORDERED THAT:

(1) The petition for panel hearing is denied.

(2) The petitions for rehearing en banc are denied.

(3) The mandate of the court will issue on March 30, 2015.

FOR THE COURT

March 23, 2015
Date

/s/ Daniel E. O'Toole
Daniel E. O'Toole
Clerk of Court

UNITED STATES COURT OF APPEALS FOR THE FEDERAL CIRCUIT

HALO ELECTRONICS, INC.
Plaintiff-Appellant,

v.

PULSE ELECTRONICS, INC., PULSE ELECTRONICS CORPORATION,
Defendants-Appellees,

2013-1472, 2013-1656

Appeal from the United States District Court for the District of Nevada in No. 07-CV-0331, Judge Philip M. Pro.

TARANTO, *Circuit Judge*, with whom REYNA, Circuit Judge, joins, concurring in the denial of rehearing en banc.

I agree that we should deny the petition for en banc review in this case. Halo raises only one question about the enhanced-damages provision of the Patent Act, 35 U.S.C. § 284, and I do not think that further review of that question is warranted. But it seems to me worth briefly noting the range of distinct, but related, questions that others have raised about § 284, if only to clarify what is not at issue

here. Whether such questions warrant en banc review will have to be determined in other cases.

Section 284 is close to content free in what it expressly says about enhanced damages: if damages have been found by a jury or assessed by the court, "the court may increase the damages up to three times the amount found or assessed." During the extended process leading to the enactment of the America Invents Act, Pub. L. No. 112–29, 125 Stat. 284 (2011), Congress was aware of our en banc decision in *In re Seagate*, 497 F.3d 1360 (Fed. Cir. 2007), and considered writing into the text standards that bear strong similarities to those articulated in Seagate. See, e.g., S. 23, 112th Cong. (Jan. 25, 2011); S. Rep. No. 111-18, at 10–13 (2009); S. 515, 111th Cong. (Apr. 2, 2009); 155 Cong. Rec. 6,278–79 (2009); S. Rep. No. 110-259, at 14–16 & n.66 (2008) (discussing Seagate). But Congress chose neither to follow that course nor to repudiate *Seagate*; it chose not to amend § 284 at all. See 157 Cong. Rec. 3,418–20 (2011) (removing proposed changes to § 284). Congress did add 35 U.S.C. § 298 to the statute to prescribe an evidentiary rule about proving that an infringer has "willfully infringed," which is a standard that is not expressly recited in § 284 (or anywhere else in the Patent Act) but that has long been held to be central to—indeed, a necessary condition for—the enhancement of damages. Section 284, however, continues to lack language prescribing substantive or procedural standards for the enhancement of damages.

Questions are now being raised about reconsidering virtually every aspect of enhancement, including whether to overrule or modify standards articulated by the en banc court in *Seagate*. To begin

with, there are fundamental questions about the substantive standards. One is whether willfulness should remain a necessary condition for enhancement under § 284's "may" language: Should that " 'well-settled' " requirement, *Beatrice Foods Co. v. New England Printing & Lithographing Co.*, 923 F.2d 1576, 1578 (Fed. Cir. 1991) (internal citation omitted); see *Seagate*, 497 F.3d at 1368, now be relaxed to allow enhancement of damages even where the infringement is not willful?[1]

Separately, if willfulness is to remain necessary, or even if not, what are the proper standards for finding willfulness? *Seagate's* two-part formulation has one component requiring an objective determination of risk ("an objectively high likelihood that [the accused infringer's] actions constituted infringement of a valid patent") and a second component that can be satisfied by either a subjective or objective determination ("either known or so obvious it should have been known"). *Seagate*, 497 F.3d at 1371. That formulation is based on the Supreme Court's explication of "willfulness" in *Safeco Insur-*

---

[1] Discretion conferred by "may" language "is rarely without limits," including necessary conditions for the action authorized—with the content of such conditions determined by the particular statutory context. Indep. Fed'n of Flight Attendants v. Zipes, 491 U.S. 754, 758 (1989); see *Martin v. Franklin Capital Corp.*, 546 U.S. 132, 139 (2005). Reflecting § 284's "may" language, our precedents hold that willfulness is necessary for, but does not compel, enhancement. When infringement is willful, the district court may or may not award an enhancement, exercising discretion based on various considerations. *See Seagate*, 497 F.3d at 1368; *Read Corp. v. Portec, Inc.*, 970 F.2d 816, 826 (Fed. Cir. 1992) ("An award of enhanced damages for infringement, as well as the extent of the enhancement, is committed to the discretion of the trial court.").

ance Co of America v. Burr, 551 U.S. 47 (2007). *See id.* at 57 (willfulness in civil-liability context covers both knowing and reckless violations; relying on treatise's observation that "willful," "wanton," and "reckless" " 'have been treated as meaning the same thing, or at least as coming out at the same legal exit' "); *id.* at 69–70 ("recklessness" refers to "conduct violating an objective standard: action entailing 'an unjustifiably high risk of harm that is either known or so obvious that it should be known' ") (quoting *Farmer v. Brennan*, 511 U.S. 825, 836 (1994)); id. at 70 (no unjustifiably high risk where position "was not objectively unreasonable"); *id.* at 70 n.20 (rejecting contention "that evidence of subjective bad faith can support a willfulness finding even when the [defendant's] reading of the statute is objectively reasonable"). Should the standard remain the *Seagate* standard? Or should it be something new?

Other questions arise in applying § 284, even taking as a given the necessity of a willfulness determination, such as who makes which decisions and what standards of proof and review should govern those decisions. Should a judge or jury decide willfulness, in full or in part? Should willfulness (or, rather, its factual predicates) have to be proved by clear and convincing evidence, *see Seagate*, 497 F.3d at 1371, or by a preponderance of the evidence, *cf. Fishman Transducers, Inc. v. Paul*, 684 F.3d 187, 193 (1st Cir. 2012) (adopting preponderance standard for willful violations of the Lanham Act under that statute's provision for enhanced damages)?

Finally, there is the question of appellate review, which is not addressed in our en banc *Seagate* decision. Most significantly, for determinations as to willfulness in particular, what standards govern ap-

pellate review? Is there a legal component reviewable de novo and a factual component reviewable deferentially (for clear error if by the judge, for substantial evidence if by the jury)? *See Bard Peripheral Vascular, Inc. v. W.L. Gore & Assocs., Inc.*, 682 F.3d 1003, 1006–08 (Fed. Cir. 2012). Does the answer change if an "abuse of discretion" standard governs our review? *See Highmark Inc. v. Allcare Health Mgmt. Sys., Inc.*, 134 S. Ct. 1744, 1748 n.2 (2014) (" 'A district court would necessarily abuse its discretion if it based its ruling on an erroneous view of the law or on a clearly erroneous assessment of the evidence.' ") (quoting *Cooter & Gell v. Hartmarx Corp.*, 496 U.S. 384, 405 (1990)). And what is the effect on review of willfulness determinations under § 284 of the Supreme Court's recent holding in Highmark that attorney's-fees decisions under § 285's "exceptional case" standard are reviewed for an abuse of discretion?

In the present case, Halo raises no questions about the necessity of a willfulness finding for enhancement under § 284, about the decision-maker or burden of persuasion in the trial court, or about the standard of review in the appellate court. Notably, adoption of a more deferential standard of review, without any change in substantive or other standards, could not help Halo: The district court in this case rejected willfulness. *Halo Electronics, Inc. v. Pulse Electronics, Inc.*, No. 2:07-CV-00331, 2013 WL 2319145, at *14–16 (D. Nev. May 28, 2013).

The only enhancement-related question that Halo presents for en banc review is whether the objective reasonableness of Pulse's invalidity position must be judged only on the basis of Pulse's beliefs before the infringement took place. But in my view, Ha-

lo has not demonstrated the general importance of that question or that the panel's assessment of objective reasonableness is inconsistent with any applicable precedents or produces confusion calling for en banc review. *See* Fed. R. App. P. 35(a). Indeed, the panel's approach to objective reasonableness—as negating the objectively high risk of harm (here, infringement) needed for willfulness—is strongly supported by *Seagate* and by the Supreme Court's authoritative *Safeco* decision addressing the meaning of "willfulness" in non-criminal contexts. And that conclusion is not affected by *Octane Fitness, LLC v. ICON Health & Fitness, Inc.*, 134 S. Ct. 1749 (2014), which does not address the term "willful" at all.

Those are sufficient reasons to deny further review here. Doubtless we will receive various requests for en banc review of some or all of the many possible § 284 questions in other cases. The standard for granting en banc review is necessarily a demanding one. We must apply the standard to particular issues in particular cases. Unlike Congress, we may not convene to clean the slate and write a set of rules that answer the host of questions about which § 284 is, at present, silent.

UNITED STATES COURT OF APPEALS FOR THE FEDERAL CIRCUIT

HALO ELECTRONICS, INC.
Plaintiff-Appellant,

v.

PULSE ELECTRONICS, INC., PULSE ELECTRONICS CORPORATION,
Defendants-Appellees,

2013-1472, 2013-1656

Appeal from the United States District Court for the District of Nevada in No. 07-CV-0331, Judge Philip M. Pro.

O'MALLEY, *Circuit Judge*, with whom HUGHES, Circuit Judge, joins, dissenting from the denial of the petition for rehearing en banc.

For the reasons detailed in my concurrence at the panel stage—*Halo Electronics, Inc. v. Pulse Electronics, Inc.*, 769 F.3d 1371, 1383–86 (Fed. Cir. 2014) (O'Malley, J., concurring)—and reiterated here, I believe the full court should hear this case en banc to reevaluate our jurisprudence governing an award of enhanced damages under 35 U.S.C. § 284. According-

ly, I dissent from the court's refusal to consider this matter en banc.

Our current two-prong, objective/subjective test for willful infringement, set out in In re Seagate Technology, LLC, 497 F.3d 1360 (Fed. Cir. 2007) (en banc) and further explained in *Bard Peripheral Vascular, Inc. v. W.L. Gore & Assocs., Inc.*, 682 F.3d 1003, 1007 (Fed. Cir. 2012), is analogous to the test this court proscribed for the award of attorneys' fees under § 285 in *Brooks Furniture Manufacturing, Inc. v. Dutailier International, Inc.*, 393 F.3d 1378, 1381–82 (Fed. Cir. 2005), *overruled by Octane Fitness, LLC v. ICON Health & Fitness, Inc.*, 134 S. Ct. 1749, 1757–58 (2014). The parallel between our tests for these two issues is not surprising. Both enhanced damages and attorneys' fees are authorized under similar provisions in title 35 of the United States Code (the Patent Act of 1952). Compare 35 U.S.C. § 284 ("[T]he court may increase the damages up to three times the amount found or assessed.") with 35 U.S.C. § 285 ("The court in exceptional cases may award reasonable attorney fees to the prevailing party."). And, although § 284 does not limit enhanced damages to "exceptional cases" as does § 285 for attorneys' fees, the Supreme Court has explained that increased damages are only available "in a case of willful or bad-faith infringement." *Aro Mfg. Co. v. Convertible Top Replacement Co.*, 377 U.S. 476, 508 (1964).[1]

---

[1] The Supreme Court has also explained that willfulness includes circumstances that qualify as recklessness—defined as a "high risk of harm, objectively assessed." *Safeco Ins. Co. of Am. v. Burr*, 551 U.S. 47, 70 (2007).

As such, our jurisprudence governing the award of enhanced damages under § 284 has closely mirrored our jurisprudence governing the award of attorneys' fees under § 285. See, e.g., *Bard Peripheral Vascular, Inc. v. W.L. Gore & Assocs., Inc.*, 682 F.3d 1003, 1007 (Fed. Cir. 2012) ("Our holding is consistent with similar holdings in other parallel areas of law. Our precedent regarding objectively baseless claims, which allow courts to award enhanced damages and attorneys' fees under 35 U.S.C. § 285, and the Supreme Court's precedent on 'sham' litigation are instructive."); *iLOR, LLC v. Google, Inc.*, 631 F.3d 1372, 1377 (Fed. Cir. 2011) ("The objective baselessness standard for enhanced damages and attorneys' fees against a non-prevailing plaintiff under Brooks Furniture is identical to the objective recklessness standard for enhanced damages and attorneys' fees against an accused infringer for § 284 willful infringement actions under [*Seagate*]."). Indeed, the structure for assessing willfulness set forth in Bard and our old § 285 Brooks Furniture test were both predicated on our interpretation of the Supreme Court's decision in *Professional Real Estate Investors, Inc. v. Columbia Pictures Industries, Inc. ("PRE")*, 508 U.S. 49 (1993), which we believed required a two-step objective/subjective inquiry before either enhanced damages or attorneys' fees could be awarded.

We have gone so far, moreover, to require that an evidentiary wall be erected between the objective and subjective portions of the inquiry. We preclude considerations of subjective bad faith—no matter how egregious—from informing our inquiry of the objective baselessness of a claim and preclude the weakness a claim or defense from being indicative of

a parties' subjective bad faith. *See, e.g., Highmark, Inc. v. Allcare Health Mgmt. Sys., Inc.*, 687 F.3d 1300, 1315 (Fed. Cir. 2012) ("Because we conclude that Allcare's allegations of infringement of claim 52 were not objectively baseless, we need not reach the question of whether Allcare acted in subjective bad faith.") vacated, *Highmark Inc. v. Allcare Health Mgmt. Sys., Inc.*, 134 S. Ct. 1744 (2014); *Old Reliable Wholesale, Inc. v. Cornell Corp.*, 635 F.3d 539, 547 n.4 (Fed. Cir. 2011) ("When making a section 285 fee award, subjective considerations of bad faith are irrelevant if the challenged claims or defenses are not objectively baseless."); *iLOR*, 631 F.3d at 1380 ("From the statements, the district court inferred that iLOR must have known that Google did not infringe its patents. However, these statements are irrelevant to the issue of objective baselessness."). We now know that the artificial and awkward construct we had established for § 285 claims is not appropriate. We should assess whether the same is true with respect to the structure we continue to employ under § 284.

The Supreme Court has told us that our reading of PRE was wrong. In *Octane Fitness*, the Court explained that the *PRE* standard was crafted as a very narrow exception for "sham" litigation to avoid chilling the exercise of the First Amendment right to petition the government for redress of grievances with the threat of antitrust liability. This narrow test required that a "sham" litigation be "objectively baseless" and "brought in an attempt to thwart the competition." *Octane Fitness*, 134 S. Ct. at 1757 (citing *PRE*, 508 U.S. at 60–61). In rejecting Brooks Furniture's reliance on *PRE* in the § 285 context, the Supreme Court stated that the narrow *PRE* standard

"finds no roots in the text of § 285" and the chilling effect of shifting attorney's fees is not as great as the threat of antitrust liability. Id. at 1757–58.

Because we now know that we were reading *PRE* too broadly, and have been told to focus on the governing statutory authorization to determine what standards should govern an award of attorneys' fees, we should reconsider whether those same interpretative errors have led us astray in our application of the authority granted to district courts under § 284. Just as "the *PRE* standard finds no roots in the text of § 285," *id.*, there is nothing in the text of § 284 that justifies the use of the *PRE* narrow standard. In rejecting the rigid two-prong, subjective/objective test for § 285 under *Brooks Furniture*, moreover, the Supreme Court told us to employ a flexible totality of the circumstances test. Id. at 1756. And, it has told us that it is inappropriate to artificially constrict the evidence a court may consider in exercising its discretion under § 285. *Octane Fitness*, 134 S. Ct. at 1756 ("The Federal Circuit's formulation is overly rigid."). Because § 284 also places the inquiry squarely within a trial court's discretion, we should rethink the extent to which we are authorized to impose restrictions on the manner in which that discretion is exercised, outside the normal restrictions imposed by the Federal Rules of Evidence and application of the abuse of discretion standard. We should now assess whether a flexible test similar to what we have been told to apply in the § 285 context is also appropriate for an award of enhanced damages.

The rigid structure we require for assessing willfulness is not the only part of our willfulness jurisprudence that requires our attention. In *Octane Fitness*, the Supreme Court also rejected the re-

quirement that patent litigants establish their entitlement to attorneys' fees under § 285 by "clear and convincing evidence." *Id.* at 1758. As we used to do for attorneys' fees, we currently require patentees to prove willfulness by clear and convincing evidence. *See Seagate*, 497 F.3d at 1371. As the Supreme Court explained in *Octane Fitness*, however, the ordinary rule in civil cases, and specifically patent infringement cases, is proof by a preponderance of the evidence. *Herman & Mclean v. Huddleston*, 459 U.S. 375, 390 (1983); *see also Octane Fitness*, 134 S. Ct. at 1758 (citing *Bene v. Jeantet*, 129 U.S. 683, 688 (1889)). In fact, other courts only require proof of willfulness by a preponderance of the evidence in similar contexts. E.g., *Fishman Transducers, Inc. v. Paul*, 685 F.3d 187, 193 (1st Cir. 2012) (holding that a preponderance of the evidence standard was appropriate to prove willfulness in a trademark infringement case); *Columbia Pictures Indus., Inc. v. Liberty Cable, Inc.*, 919 F. Supp. 985 (S.D.N.Y. 1996) (explaining that plaintiff must prove willful copyright infringement by a preponderance of the evidence). As with § 285, § 284 has no statutory language that would justify a higher standard of proof; it just demands a simple discretionary inquiry and imposes no specific evidentiary burden. *See Octane Fitness*, 134 S. Ct. 1758. This court should evaluate whether there are reasons to maintain a standard that is at odds with the ordinary standard in civil cases for a finding of willfulness where nothing in the statutory text even hints that we do so. It is possible that, given the Supreme Court's guidance in *Aro* and *Safeco* regarding the type of showing necessary for a finding of willfulness, the clear and convincing evidence standard is appropriate under § 284

even though not similarly appropriate under § 285. If so, we should collectively make that determination only after careful consideration of *Octane Fitness*, however.

The Supreme Court also rejected de novo review of a fee award under § 285. *Highmark*, 134 S. Ct. at 1748. According to the Supreme Court, "whether a case is 'exceptional' under § 285 is a matter of discretion," which "is to be reviewed only for abuse of discretion." *Id.* Section 284 also leaves the issue of enhanced damages to the discretion of the court. Compare 35 U.S.C. § 284 ("[T]he court may increase the damages . . . ." (emphasis added)) with 35 U.S.C. § 285 ("The court in exceptional cases may award reasonable attorney fees to the prevailing party." (emphasis added)). Indeed, other appellate courts review similar willfulness findings with more deference. E.g., *Dolman v. Agee*, 157 F.3d 708, 714–15 (9th Cir. 1998) (reviewing a finding of willful copyright infringement for clear error). As such, we must also consider whether a district court's finding of willfulness should continue to be subject to de novo review.

Finally, under the plain language of §§ 284 and 285, "the court" is the entity that decides whether the remedy is appropriate. 35 U.S.C. § 284 *("[T]he court* may increase the damages . . . ." (emphasis added)); 35 U.S.C. § 285 ("*The court* in exceptional cases may award reasonable attorney fees to the prevailing party." (emphasis added)). While we allowed the court to determine whether to award attorneys' fees under *Brooks Furniture*, we have long held that a willfulness determination contains issues of fact that should be submitted to a jury. *See Bard*, 682 F.3d at 1005 (holding that the objective prong under

Seagate was ultimately a question of law for the court, but leaving the subjective prong as a question of fact for the jury); *see also Nat'l Presto Indus., Inc. v. West Bend Co.*, 76 F.3d 1185, 1193 (Fed. Cir. 1996) ("The issue of willful infringement remains with the trier of fact."); *Braun Inc. v. Dynamics Corp. of Am.*, 975 F.2d 815, 822 (Fed. Cir. 1992) ("Whether infringement is willful is a question of fact and the jury's determination as to willfulness is therefore reviewable under the substantial evidence standard." (citation omitted)). Although not directly addressed by the Supreme Court in either *Octane Fitness* or *Highmark*, when we reevaluate the proper standards for an award of enhanced damages, this court should also consider whether § 284 requires a decision on enhanced damages to be made *by the court*, rather than the jury. The mere presence of factual components in a discretionary inquiry does not remove that inquiry from the court to whom Congress reposed it. *See Markman v. Westview Instruments, Inc.*, 52 F.3d 967, 992 (Fed. Cir. 1995), *aff'd*, 517 U.S. 370 (1996) ("Even within the realm of factual questions, whether a particular question must always go to a jury depends 'on whether the jury must shoulder this responsibility as necessary to preserve the substance of common law right of trial by jury.'" (quoting *Tull v. United States*, 481 U.S. 412, 417 (1987))); see also *Cooter & Gell v. Hartmarx Corp.*, 496 U.S. 384, 401–02 (1990) (explaining that Rule 11 sanctions are to be determined by a judge even though "the Rule requires a court to consider issues rooted in factual determinations"); *Pierce v. Underwood*, 487 U.S. 552, 559 (1988) (concluding the language in the statute for awarding attorney's fees in the Equal Access to

Justice Act "emphasizes the fact that the determination is for the district court to make").

For the following reasons, I urge the full court to take this opportunity to reevaluate our § 284 jurisprudence in light of both the statutory text and the Supreme Court's recent decisions in *Highmark* and *Octane Fitness*.

MOTION FILED
JUL 24 2015

No. 14-1513

IN THE

Supreme Court of the United States

HALO ELECTRONICS, INC.,

Petitioner,

v.

PULSE ELECTRONICS, INC., ET AL.,

Respondents.

On Petition for Writ of Certiorari to the United States Court of Appeals for the Federal Circuit

COMBINED MOTION FOR LEAVE TO FILE BRIEF OF *AMICI CURIAE* AND BRIEF OF *AMICI CURIAE* INDEPENDENT INVENTOR GROUPS IN SUPPORT OF PETITIONER

[*Amici* Listed on Inside Cover]

ANDREW S. BALUCH*
STEPHEN G. NAGY
STRAIN & STRAIN PLLC
1455 Pennsylvania Ave., N.W., Suite 400
Washington, D.C. 20004
(202) 621-1872
andrew.baluch@strainpllc.com

**Counsel of Record* *Counsel for Amici Curiae*

LIST OF *AMICI CURIAE*
INDEPENDENT INVENTOR GROUPS

U.S. Inventor
Edison Nation
Inventors Digest
National Society of Inventors
Inventors Network of the Capital Area
Texas Inventors Association
Columbus Phenix City Inventors Association
Music City Inventors Group
Louis J. Foreman
Paul Morinville
James Innes

MOTION FOR LEAVE TO FILE BRIEF OF *AMICI CURIAE*

Amici curiae have filed the accompanying brief in both *Halo Elecs., Inc. v. Pulse Elecs., Inc., et al.*, No. 14-1513, and *Stryker Corp., et al. v. Zimmer, Inc., et al.*, No. 14-1520. A motion for leave is required only in *Halo*, the captioned case. All parties in *Stryker* have consented in writing to the filing of the accompanying brief. Written consent has also been received from the petitioner in *Halo*. Respondents in *Halo*, however, have withheld consent without explanation.

So that the Court may consider the accompanying brief in both *Stryker* (No. 14-1520) and *Halo* (No. 14-1513), which raise similar issues, *amici curiae* respectfully move for leave to file the accompanying brief in *Halo* (No. 14-1513).

Good cause exists to grant the present motion. The Federal Circuit previously granted leave for *amicus curiae* Louis J. Foreman to file a similar brief in support of the petition for rehearing en banc in the *Halo* proceedings below, notwithstanding respondents' similar refusal to consent to such filing. *See* Order Granting Leave to File Amicus Brief, *Halo Elecs., Inc. v. Pulse Elecs., Inc., et al.*, No. 13-1472 (Fed. Cir. Jan. 8, 2015).

Amici curiae are independent inventor associations and individuals that rely on patents to protect their inventions. *Amici* are directly harmed by the

Federal Circuit's unduly narrow interpretation of 35 U.S.C. § 284 limiting the circumstances under which enhanced damages may be awarded in patent cases. *Amici* have a strong interest in ensuring that the U.S. patent laws are interpreted correctly and adequately protect innovation.

Collectively, *amici* have invested significant energy and personal resources on research and development in their respective technical fields. *Amici* rely on patents to protect those investments and to commercialize their discoveries through licensing. But the Federal Circuit's rigid and virtually insurmountable test for obtaining enhanced damages under § 284 incentivizes infringers to litigate patents rather than negotiate licenses, placing heavy burdens on small inventors and jeopardizing future investments by all but the largest multinationals.

The parties in the captioned cases are relatively large, established companies that do not necessarily represent the views and interests of *amici*. Therefore, in order to allow the Court to consider a greater spectrum of legal and policy implications raised in these cases, *amici* respectfully move for leave to file the attached brief.

Moreover, no party would be prejudiced by the submission of the accompanying brief. Petitioners have consented and respondents have sought a 31 day extension of time to file their brief in part based on *amici curiae*'s notification that they intend to submit the accompanying brief. Respondents will thus have ample time to review and respond to any issues raised in the brief.

For these reasons, *amici curiae* respectfully request that the Court grant leave to file the accompanying brief in *Halo* (No. 14-1513), which raises similar issues as and should be considered together with the brief in *Stryker* (No. 14-1520).

Respectfully submitted,

ANDREW S. BALUCH
Counsel of Record
STEPHEN G. NAGY
Of Counsel
STRAIN & STRAIN PLLC
1455 Pennsylvania Ave., N.W.,
Suite 400
Washington, D.C. 20004
(202) 621-1872
andrew.baluch@strainpllc.com

Counsel for Amici Curiae

TABLE OF CONTENTS

MOTION FOR LEAVE TO FILE BRIEF OF *AMICI CURIAE* M-1

TABLE OF AUTHORITIES ii

INTEREST OF *AMICI CURIAE* 1

SUMMARY OF ARGUMENT 3

ARGUMENT 5

I. THE FEDERAL CIRCUIT'S TWO-PART OBJECTIVE/SUBJECTIVE TEST FOR ENHANCING DAMAGES IS CONTRARY TO STATUTE AND THIS COURT'S DECISIONS 5

II. THE *HALO* AND *STRYKER* PETITIONS IMPLICATE BILLIONS OF DOLLARS OF GROSS DOMESTIC PRODUCT AND THE FUTURE OF AMERICA'S SMALL INVENTORS 12

CONCLUSION 15

TABLE OF AUTHORITIES

CASES

Aro Mfg. Co. v. Convertible Top Replacement Co., 377 U.S. 476 (1964) 9

Birdsall v. Coolidge, 93 U.S. 64 (1876) 7

Clark v. Wooster, 119 U.S. 322 (1886) 4, 7

Day v. Woodworth, 54 U.S. 363 (1851) 4, 8

Dean v. Mason, 61 U.S. 198 (1858) 7

Farmer v. Brennan, 511 U.S. 825 (1994) 10

Halo Elecs., Inc. v. Pulse Elecs., Inc., 780 F.3d 1357 (Fed. Cir. 2015) 5, 9, 13

In re Seagate Tech., LLC, 497 F.3d 1360 (Fed. Cir. 2007) 8, 9

Microsoft Corp. v. i4i Ltd. P'ship, 131 S. Ct. 2238 (2011) 12

Octane Fitness, LLC v. Icon Health and Fitness, Inc., 134 S. Ct. 1749 (2014) 3, 4, 9

Powell v. Home Depot U.S.A., Inc., 663 F.3d 1221 (Fed. Cir. 2011) 14

Radio Corp. of Am. v. Radio Eng'g Labs., 293 U.S. 1 (1934) 12

Rite-Hite Corp. v. Kelley Co., 56 F.3d 1538 (Fed. Cir. 1995) 14

Safeco Ins. Co. of Am. v. Burr, 551 U.S. 47 (2007) 11

TABLE OF AUTHORITIES—Continued

Saucier v. Katz, 533 U.S. 194 (2001) 11

Seymour v. McCormick, 57 U.S. 480 (1853) 8

Stryker Corp. v. Zimmer, Inc., 782 F.3d 649 (Fed. Cir. 2015) 5, 10

Teese v. Huntingdon, 64 U.S. 2 (1860) 7

Tilghman v. Proctor, 125 U.S. 136 (1888) 6

Topliff v. Topliff, 145 U.S. 156 (1892) 6

Uniloc USA, Inc. v. Microsoft Corp., 632 F.3d 1292 (Fed. Cir. 2011) 10

STATUTES

35 U.S.C. § 282(a) 11

35 U.S.C. § 284 ..... passim

35 U.S.C. § 285 ..... 4, 9

Patent Act of 1836, ch. 357, § 14, 5 Stat. 117 (1836) 4, 6

Patent Act of 1870, ch. 230, § 59, 16 Stat. 198 (1870) 6

RULES

Supreme Court Rule 37.6 1

TABLE OF AUTHORITIES—Continued

Supreme Court Rule 37.2 1

TREATISES

Prosser and Keeton on Law of Torts § 34 (5th ed. 1984)..... 10

Restatement (Second) of Torts § 500 (1965) 10

Restatement (Third) of Torts: Phys. & Emot. Harm, § 2 (2010) 11

LEGISLATIVE MATERIALS

S. Rep. No. 79-1503 (1946) 5, 14

OTHER AUTHORITIES

Anthony Breitzman & Diana Hicks, An Analysis of Small Business Patents By Industry and Firm Size (Nov. 2008), *available at* http://archive.sba.gov/advo/research/rs335tot.pdf... 13

Dennis Crouch, *No Willful Infringement Since Infringer's Litigation Arguments Were "Not Without Reason"*, Patently-O (Dec. 19, 2014), http://patentlyo.com/patent/2014/12/infringement-infringers-litigation.html..... 10

TABLE OF AUTHORITIES—Continued

U.S. Dep't of Commerce, *Intellectual Property and the U.S. Economy: Industries in Focus* (Mar. 2012) 12

ADDRESS OF THE ADVOCATE OF THE PATENTEES, INVENTORS OF USEFUL IMPROVEMENTS IN THE ARTS AND SCIENCES: IN DEFENCE OF MENTAL PROPERTY 9 (Dec. 19, 1806) 1, 12

INTEREST OF *AMICI CURIAE*[1]

> *A man's useful inventions subject him to insult, robbery, and abuse.* –Benjamin Franklin.[2]

Perhaps the most important feature of the American patent system is that it does more than simply encourage ordinary people to invent new products and services. It also makes it economically feasible for them to do so.

Amici curiae are individual inventors and associations that share a common interest in a robust patent system that encourages and appropriately rewards successful inventive pursuits. Collectively, *amici* have invested significant energy and personal resources on research and development in their respective technical fields. *Amici* rely on

---

[1] In accordance with Supreme Court Rule 37.6, *amici curiae* certify that: (1) no counsel to a party authored this brief, in whole or in part, (2) no person or entity, other than the *amici* represented on this brief, their members, and their counsel, have made a monetary contribution to the preparation and submission of this brief, and (3) that counsel of record for all parties received notice of the intention to file this *amici curiae* brief at least 10 days prior to the due date for filing. Written consent of the parties has been obtained in Case No. 14-1520 and will be filed with the Clerk of the Court pursuant to Supreme Court Rule 37.2. Together with this brief, *amici curiae* have attached a motion for leave to file in Case No. 14-1513.

[2] ADDRESS OF THE ADVOCATE OF THE PATENTEES, INVENTORS OF USEFUL IMPROVEMENTS IN THE ARTS AND SCIENCES: IN DEFENCE OF MENTAL PROPERTY 9 (Dec. 19, 1806).

patents to protect those investments and to commercialize their discoveries through licensing. Due to their small size, *amici* oftentimes lack the resources or manufacturing ability to fully commercialize all aspects of an invention themselves and therefore must rely on licensing to bring their products to market. But a large company's incentive to take a license from a small inventor is all but eliminated, as in the cases at bar, if the only punishment for refusing a license and losing an infringement suit is a royalty.

Amici include: U.S. Inventor, Edison Nation, Inventors Digest, National Society of Inventors, Inventors Network of the Capital Area, Texas Inventors Association, Columbus Phenix City Inventors Association, Music City Inventors Group, Paul Morinville, James Innes, and Louis J. Foreman.

U.S. Inventor is a non-profit association of inventors devoted to protecting the intellectual property of individuals and small companies through education, advocacy, and reform. Believing the interests of larger corporations to be disproportionately overrepresented in the current discussion regarding patent reform, U.S. Inventor aims to encourage dialogue between lawmakers, inventors, and other patent stakeholders concerning the effects of past and proposed patent reform legislation and federal court decisions on the patent rights of small businesses and sole inventors.

Louis J. Foreman is founder and Chief Executive of Enventys, the CEO of Edison Nation and Edison Nation Medical, the Executive Producer of the

award- winning PBS show Everyday Edisons, author of The Independent Inventor's Handbook, and publisher of Inventor's Digest. Himself an inventor on twelve U.S. patents, Mr. Foreman has created nine successful start-ups and has been directly responsible for the creation of over twenty others.

Amici join together in this brief to underscore the importance of patents to independent inventors and entrepreneurs who rely on licensing from willing licensees to commercialize inventions. Without the economic returns of a license taken by a willing licensee, inventors have less incentive to engage in costly R&D, and investors have less incentive to fund small start-ups.

SUMMARY OF ARGUMENT

The text of 35 U.S.C. § 284 places no limits on a district court's discretion to enhance damages in patent cases. The statute simply provides that "the court may increase the damages up to three times the amount found or assessed." The Federal Circuit, however, has artificially constrained lower courts' discretion by engrafting a "willfulness" requirement onto the statue. By further defining "willfulness" using a rigid two-part objective/subjective test that mirrors the test this Court overturned in *Octane Fitness, LLC v. Icon Health and Fitness, Inc.*, 134 S. Ct. 1749 (2014), the Federal Circuit's narrow interpretation of § 284 runs contrary to both the plain language of the current statute and decisions of this Court from over a century ago interpreting the statute's predecessors.

The Patent Act of 1836 first gave courts discretion to increase damages in patent cases based simply on the "circumstances of the case." Patent Act of 1836, ch. 357, § 14, 5 Stat. 117 (1836). In the ensuing decades, never did this Court limit those circumstances to instances of "willful" patent infringement. Instead, this Court explained that enhanced damages were broadly available, for example, where "the defendant has not acted in good faith, or has been stubbornly litigious, or has caused unnecessary expense and trouble to the plaintiff," *Day v. Woodworth*, 54 U.S. 363, 372 (1851), and also to compensate the plaintiff for the "trouble the plaintiff has been put to by the defendant, and any special inconvenience he has suffered from the wrongful acts of the defendant," *Clark v. Wooster*, 119 U.S. 322, 326 (1886).

This Court's decision in *Octane Fitness* casts further doubt on the Federal Circuit's two-part test for enhancing damages under § 284. In *Octane Fitness*, this Court struck down a similarly rigid, two-part test for awarding attorney fees under 35 U.S.C. § 285, holding that the Federal Circuit "superimpose[d] an inflexible framework onto statutory text that is inherently flexible." 134 S. Ct. at 1751. Moreover, the permissive language of § 284 is even more flexible than that of § 285, because the former is not limited to a finding that a case is "exceptional." *Compare* 35 U.S.C. § 284 ("[T]he court may increase the damages up to three times the amount found or assessed."), *with* 35 U.S.C. § 285 ("The court in exceptional cases may award reasonable attorney fees to the prevailing party.").

The Federal Circuit had an opportunity to resolve these issues in the captioned case and in *Stryker Corp. v. Zimmer, Inc.*, 782 F.3d 649 (Fed. Cir. 2015), also currently on petition for writ of certiorari, but declined, despite the dissent of two judges and the concurrence of two others who acknowledged "fundamental questions about the substantive standards" of enhanced damages under § 284. *Halo Elecs., Inc. v. Pulse Elecs., Inc.*, 780 F.3d 1357, 1359 (Fed. Cir. 2015) (Taranto, Reyna, JJ., concurring); *id.* at 1361-64 (O'Malley, Hughes, JJ., dissenting); *Stryker*, 782 F.3d at 649.

This Court should grant certiorari in the captioned case and in *Stryker* (No. 14-1520) to correct the Federal Circuit's misreading of 35 U.S.C. § 284.

ARGUMENT

I. The Federal Circuit's Two-Part Objective/Subjective Test for Enhancing Damages is Contrary to Statute and this Court's Decisions

a. The plain text of 35 U.S.C. § 284 gives district courts wide discretion to increase damages: "[T]he court may increase the damages up to three times the amount found or assessed." The legislative history from the 1946 revision to the Patent Act underscores this discretion, explaining that "the present discretion to award triple damages . . will discourage infringement of a patent by anyone thinking that all he would be required to pay if he loses the suit would be a royalty." S. Rep. No. 79-1503, at 2 (1946).

That discretion was first introduced in the Patent Act of 1836, ch. 357, § 14, 5 Stat. 117 (1836): "[I]t shall be in the power of the court to render judgment for any sum above the amount found by such verdict . . . not exceeding three times the amount thereof, according to the circumstances of the case . . . ." That discretion remained unchanged in the Patent Act of 1870, ch. 230, § 59, 16 Stat. 198, 207 (1870) ("[T]he court may enter judgment thereon for any sum above the amount found by the verdict as the actual damages sustained, according to the circumstances of the case, not exceeding three times the amount of such verdict, together with the costs.").

Interpreting the 1836 and 1870 Patent Acts, this Court repeatedly emphasized the inherent flexibility of the enhanced damages provisions, and never limited trial courts' discretion to any particular circumstances, much less a finding of "willfulness":

- *Topliff v. Topliff*, 145 U.S. 156, 174 (1892) ("Under these circumstances"—i.e., where "*defendant, knowing all their customers and plaintiffs' facilities for the manufacture of equalizers, made serious inroads upon their business, and sold almost exclusively to those who had formerly been customers of the plaintiffs*"—"we should not have disturbed the decree of the court below if it had seen fit to increase the damages . . . .") (emphasis added).

- *Tilghman v. Proctor*, 125 U.S. 136, 143-44 (1888) ("[T]he court may, *whenever the circumstances of the case appear to require it*, inflict vindictive or

punitive damages, by rendering judgment for not more than thrice the amount of the verdict.") (emphasis added).

- *Clark v. Wooster*, 119 U.S. 322, 326 (1886) ("There may be damages beyond [a reasonably royalty], such as the *expense and trouble the plaintiff has been put to by the defendant, and any special inconvenience he has suffered from the wrongful acts of the defendant*; but these are more properly the subjects of allowance by the court under the authority given to it to increase the damages.") (emphasis added).

- *Birdsall v. Coolidge*, 93 U.S. 64, 69-70 (1876) ("Courts could not, under [the act of 1836], augment the allowance made by the final decree [in actions in equity], as in the case of the verdict of a jury [in actions at law]; but the present patent act [of 1870] provides that the court shall have the same *powers to increase the decree, in its discretion*, that are given by the act to increase the damages found by verdicts in actions at law.") (emphasis added).

- *Teese v. Huntingdon*, 64 U.S. 2, 9 (1860) ("[I]f, in the opinion of the court, the defendant has not acted in good faith, or *has caused unnecessary expense and injury to the plaintiff*, the court may render judgment for a larger sum, not exceeding three times the amount of the verdict.") (emphasis added).

- *Dean v. Mason*, 61 U.S. 198, 203 (1858) ("Generally, [an award of lost profits] is sufficient to protect the rights of the owner; but *where the*

wrong has been done, under aggravated circumstances, the court has the power, under the statute, to punish it adequately, by an increase of the damages.") (emphasis added).

- *Seymour v. McCormick*, 57 U.S. 480, 488-89 (1853) ("The power to inflict vindictive or punitive damages is committed to the *discretion and judgment of the court* within the limit of trebling the actual damages found by the jury.") (emphasis added).

- *Day v. Woodworth*, 54 U.S. 363, 372 (1851) ("[I]f, in the opinion of the court, the defendant has not acted in good faith, or has been *stubbornly litigious, or has caused unnecessary expense and trouble to the plaintiff*, the court may increase the amount of the verdict, to the extent of trebling it.") (emphases added).

b. Despite that history, and contrary to the "plain meaning of the statute," the Federal Circuit "has nevertheless read a willfulness standard into the statute." *In re Seagate Tech., LLC*, 497 F.3d 1360, 1377 (Fed. Cir. 2007) (Gajarsa, J., concurring) (arguing that "there is no principled reason for continuing to engraft a willfulness requirement onto section 284"). Further cabining the statute, the en banc court in *Seagate* defined "willfulness" narrowly using a two-part test that requires a clear-and-convincing showing of (1) an "objectively high likelihood [of] infringement" which was (2) subjectively "known or . should have been known" to the infringer. *Id.* at 1371.

As the dissenting judges in the proceedings below correctly explained, the two-part *Seagate* test "is analogous to the test [the Federal Circuit] prescribed for the award of attorneys' fees under [35 U.S.C.] § 285" which was "overruled by *Octane Fitness, LLC v. ICON Health & Fitness, Inc.*, 134 S. Ct. 1749, 1757-58 (2014)." *Halo*, 780 F.3d at 1361 (O'Malley, Hughes, JJ., dissenting).

In particular, this Court in *Octane Fitness* struck down the Federal Circuit's two-part objective/subjective test under § 285 because that test "superimpose[d] an inflexible framework onto statutory text that is inherently flexible." 134 S. Ct. at 1756. Indeed, a court's discretion to enhance damages under § 284 is *even broader* than the discretion to shift fees under § 285, because the former is not limited to a finding that the case is "exceptional."

c. This Court's decision in *Aro Mfg. Co. v. Convertible Top Replacement Co.*, 377 U.S. 476 (1964) did not purport to alter a century's worth of precedent interpreting § 284 and its predecessors. In *Aro*, this Court merely said, in passing, that the patentee "could" recover treble damages under circumstances of willful or bad-faith infringement. 377 U.S. at 508. That statement is properly interpreted to mean that "a finding of willfulness is *sufficient*" to enhance damages; it "cannot be interpreted to mean that enhanced damages are *limited* to a finding of willfulness." *Seagate*, 497 F.3d at 1381 (Gajarsa, J., concurring) (emphases added).

d. Apart from unnecessarily engrafting "willfulness" onto § 284, the Federal Circuit has

defined willfulness with its own two-part objective/subjective test that bears almost no resemblance to the traditional tort doctrine.

Specifically, under the Federal Circuit's "objective" prong for willfulness, an infringer's pre-suit infringement can be deemed not willful if its attorneys, in the litigation, devise a "not unreasonable" defense, developed for the first time post-suit. *Stryker Corp. v. Zimmer, Inc.*, 782 F.3d 649, 654, 657, 661, 662 (Fed. Cir. 2015). By this logic, as commenters have observed, "an infringer who made the intentional decision to infringe, believing fully that the act was infringement, and that was later judged to be infringing can still avoid being stuck with enhanced damages with a later-concocted (but ultimately incorrect) argument that the patent is invalid or not infringed—so long as that argument is 'susceptible to a reasonable conclusion.'" Dennis Crouch, *No Willful Infringement Since Infringer's Litigation Arguments Were "Not Without Reason"*, Patently-O (Dec. 19, 2014), http://patentlyo.com/patent/2014/12/infringement-infringers-litigation.html (quoting *Uniloc USA, Inc. v. Microsoft Corp.*, 632 F.3d 1292, 1310 (Fed. Cir. 2011)).

The above "willfulness" test for patent infringement now looks nothing like the traditional tort doctrine in civil cases. *See Farmer v. Brennan*, 511 U.S. 825, 836 (1994); Prosser and Keeton on Law of Torts § 34, p. 213-14 (5th ed. 1984); Restatement (Second) of Torts § 500 (1965)). Under the traditional doctrine, a person's conduct is not judged on the reasonableness of his attorney's legal

arguments minted years later, nor judged from the vantage of an omniscient person aware of all facts in the world. Rather, "[a] person acts recklessly in engaging in conduct if: (a) the person *knows* of the risk of harm created by the conduct or *knows* facts that make the risk obvious to *another in the person's situation*, and (b) the precaution that would eliminate or reduce the risk involves burdens that are so slight relative to the magnitude of the risk as to render the person's failure to adopt the precaution a demonstration of the person's indifference to the risk." Restatement (Third) of Torts: Phys. & Emot. Harm, § 2 (2010) (emphases added).

In *Safeco Ins. Co. of Am. v. Burr*, 551 U.S. 47 (2007), this Court held that Safeco did not "willfully" violate the Fair Credit Reporting Act because "Safeco's *misreading* of the statute *was* not reckless." *Id.* at 71 (emphases added). Thus, Safeco actually *read* the statute but operated under a mistaken interpretation *at the time it violated the statute*. *See id.* at 70 (analogizing to *Saucier v. Katz*, 533 U.S. 194, 202 (2001), and asking "whether an action was reasonable in light of legal rules that were *'clearly established' at the time*") (emphasis added).

e. The statutory presumption of validity, 35 U.S.C. § 282(a), prevents an infringer, who is notified of a patent, from burying its head in the sand and refusing to take a license on the mere hope that one day its attorneys will conjure a "not unreasonable" litigation defense. Section 282(a) states, in relevant part, "[a] patent shall be presumed valid." That presumption exists at all times after a patent has issued—including when a licensing offer is sent to a

potential infringer—and remains "*until* the presumption has been *overcome* by convincing evidence of error." *Microsoft Corp. v. i4i Ltd. P'ship*, 131 S. Ct. 2238, 2248 (2011) (quoting *Radio Corp. of Am. v. Radio Eng'g Labs.*, 293 U.S. 1, 7 (1934)) (emphases added). Therefore, if the statutory presumption of validity is to have any real meaning, an infringer who refuses a reasonable licensing offer ought to have a good reason for its refusal at the time.

II. The *Halo* and *Stryker* Petitions Implicate Billions of Dollars of Gross Domestic Product and the Future of America's Small Inventors

> *A man's useful inventions subject him to insult, robbery, and abuse.* –Benjamin Franklin.[3]

The U.S. Department of Commerce has calculated that intellectual property intensive industries support at least 40 million American jobs and contribute more than $5.06 trillion dollars to, or nearly 34.8 percent of, U.S. gross domestic product. U.S. Dep't of Commerce, *Intellectual Property and the U.S. Economy: Industries in Focus* vi-vii (Mar. 2012). In 2009, Americans received $89.8 billion in intellectual property royalties and license fees, while

---

[3] ADDRESS OF THE ADVOCATE OF THE PATENTEES, INVENTORS OF USEFUL IMPROVEMENTS IN THE ARTS AND SCIENCES: IN DEFENCE OF MENTAL PROPERTY 9 (Dec. 19, 1806).

paying foreigners only $25.2 billion—giving the United States a *$64.6 billion trade surplus* in IP licensing. *Id.* at 54.

Licensing is critical to independent inventors and entrepreneurs who do not have the means to commercialize their inventions themselves. What they have instead is patents. A study commissioned by the Small Business Administration found that: (1) "Small businesses develop more patents per employee than larger businesses, with the smallest firms, those with fewer than 25 employees, producing the greatest number of patents per employee"; and (2) "small firms are much more likely to develop emerging technologies than are large firms."[4]

But the incentive to pay a small inventor for a license is all but eliminated when an infringer is allowed—as in the proceedings below—to *deliberately copy* a patented product, *reject* the patentee's licensing offers, *refuse* to negotiate, obtain *no opinion* of counsel, *infringe* the patent for years, *poach customers*, and then—after being sued for infringement—concoct a litigation defense that is *unsuccessful* (but at least not rock-bottom "frivolous" or a "sham") and ultimately pay the patentee only a "reasonable royalty" in damages. This "reasonable royalty" is the same amount the infringer would

---

[4] Anthony Breitzman & Diana Hicks, An Analysis of Small Business Patents By Industry and Firm Size i, v (Nov. 2008), *available at* http://archive.sba.gov/advo/research/rs335tot.pdf.

have paid if it had taken a license in the first place. *See Powell v. Home Depot U.S.A., Inc.*, 663 F.3d 1221, 1238 (Fed. Cir. 2011) ("[T]he reasonable royalty must be based on the terms of a [hypothetical] licensing agreement reached . . . between the patentee and the infringer at the time infringement began.") (alteration in original; internal quotations omitted) (quoting *Rite-Hite Corp. v. Kelley Co.*, 56 F.3d 1538, 1554 (Fed. Cir. 1995) (en banc)). The lesson for infringers today is clear: refuse a license from a small inventor because you will pay the inventor the same (unenhanced) royalty post-suit in damages if you lose the suit that you would have paid for the license pre-suit.

Giving district courts the discretion to enhance damages under these circumstances, as Congress intended, would "discourage infringement of a patent by anyone thinking that all he would be required to pay if he loses the suit would be a royalty." S. Rep. No. 79-1503, at 2 (1946).

CONCLUSION

For the foregoing reasons, this Court should grant certiorari to correct the Federal Circuit's interpretation of 35 U.S.C. § 284.

Respectfully submitted,

ANDREW S. BALUCH
Counsel of Record
STEPHEN G. NAGY
Of Counsel
STRAIN & STRAIN PLLC
1455 Pennsylvania Ave., N.W.,
Suite 400
Washington, D.C. 20004
(202) 621-1872
andrew.baluch@strainpllc.com

Counsel for Amici Curiae

MOTION FILED
JUL 24 2015

No. 14-1513

IN THE

Supreme Court of the United States

HALO ELECTRONICS, INC.,
Petitioner,

v.

PULSE ELECTRONICS, INC.,
Respondent.

On Petition for a Writ of Certiorari to the United States Court of Appeals for the Federal Circuit

MOTION FOR LEAVE TO FILE AND BRIEF OF *AMICI CURIAE* NOKIA TECHNOLOGIES OY AND NOKIA USA INC. IN SUPPORT OF PETITIONER

JOHN D. HAYNES
Counsel of Record
LINDSEY YEARGIN
ALSTON & BIRD LLP
1201 W. Peachtree St.
Atlanta, GA 30309
Tel. (404) 881-7000
john.haynes@alston.com

Counsel for Amici Curiae

July 24, 2015

Nokia Technologies Oy and Nokia USA Inc. (collectively, "Nokia") hereby move, pursuant to S. Ct. R. 37.2, for leave to file an *amici curiae* brief in support of the petition for a writ of certiorari to the United States Court of Appeals for the Federal Circuit. Nokia is filing this motion because Respondent has refused to grant consent to Nokia to file its *amici curiae* brief. A copy of the proposed brief is attached.

As more fully explained on page 1 of the attached brief under the heading "Interest of the *Amici Curiae*," Nokia is a global leader in the telecommunications equipment and services industry. Nokia regularly avails itself of the patent system, both as a patent holder, patent licensor, and as plaintiff and defendant in patent cases, including cases in which enhanced damages under § 284 are sought. Accordingly, Nokia has a particular interest in ensuring that the standards governing enhanced damages under § 284 properly balance the interests of patent holders and those of users of patented technology.

Nokia's brief will assist the Court in determining whether to grant certiorari because Nokia is well-positioned to point out the importance of this case to innovative companies and frequent participants in the patent system. Nokia is not motivated by a desire to influence the outcome of any pending case, nor is Nokia interested in the merits of this particular case. Rather, because Nokia is a frequent and repeat participant in all aspects of the patent system, Nokia can inform the Court of the broad implications of the Federal Circuit's overly

rigid standard for awarding enhanced damages under § 284.

Accordingly, Nokia respectfully requests that the Court grant leave to file the attached brief as *amici curiae*.

Respectfully submitted,

JOHN D. HAYNES
Counsel of Record
LINDSEY YEARGIN
ALSTON & BIRD LLP
1201 W. Peachtree St.
Atlanta, GA 30309
Tel. (404) 881-7000
john.haynes@alston.com

Counsel for Amici Curiae

July 24, 2015

TABLE OF CONTENTS

INTEREST OF THE *AMICI CURIAE* 1

SUMMARY OF ARGUMENT 3

ARGUMENT 5

I. AN AWARD OF ENHANCED DAMAGES UNDER § 284 SHOULD NOT REQUIRE A FINDING OF WILLFULNESS 5

A. The Statutory Language of § 284 Provides No Support for a Willfulness Requirement 5

B. The Federal Circuit's Grafting of a Willfulness Requirement onto § 284 is Contrary to the Legislative History of the Statute and Ignores the Remedial Purpose of Enhanced Damages 8

II. REVIEW IS NEEDED TO RECONCILE THE LEGAL STANDARD FOR ENHANCED DAMAGES UNDER SECTION 284 WITH THIS COURT'S PRECEDENT REGARDING SECTION 285 12

A. This Court's Rejection of the Federal Circuit's Unduly Rigid Test for Fee-Shifting Under § 285 Favors Rejection of the Federal Circuit's Equally Rigid Test Under § 284 12

B. This Court's Precedent Confirms that a Heightened Standard of Proof Is Not Required to Award Enhanced Damages 15

III. THE FEDERAL CIRCUIT'S TEST IS OVERLY RIGID EVEN WITH RESPECT TO WILLFULNESS 16

A. The Federal Circuit's Willfulness Test Encourages Free-Riding by Infringers and Discourages Innovation 17

B. The High Standard of Proof Required to Satisfy the Willfulness Standard Creates an Unreasonable Burden for a Patent Owner to Obtain Enhanced Damages 21

IV. THE FEDERAL CIRCUIT IS DIVIDED ON THE ISSUE OF WILLFULNESS 23

CONCLUSION 25

TABLE OF AUTHORITIES

CASES

Brooks Furniture Mfg., Inc. v. Dutailier Int'l, Inc.,
393 F.3d 1378 (Fed. Cir. 2005) 13, 14

Datascape Corp. v. SMEC, Inc.,
879 F.2d 820 (Fed. Cir. 1989) 18

eBay Inc. v. MercExchange, L.L.C.,
547 U.S. 388 (2006) 11

Gen. Motors Corp. v. Devex Corp.,
461 U.S. 648 (1983) 7

Grogan v. Garner,
498 U.S. 279 (1991) 22

Halo Elecs., Inc. v. Pulse Elecs., Inc.,
769 F.3d 1371 (Fed. Cir. 2014) 15, 23, 24

Herman & MacLean v. Huddleston,
459 U.S. 375 (1983) 22, 23

iLOR, LLC v. Google, Inc.,
631 F.3d 1372 (Fed. Cir. 2011) 14

In re Seagate Tech., LLC,
497 F.3d 1360 (Fed. Cir. 2007) ..... passim

King Instruments Corp. v. Perego,
65 F.3d 941 (Fed. Cir. 1995) 9

Octane Fitness, LLC v. ICON Health & Fitness, Inc.,
134 S. Ct. 1749 ..... passim

Prof'l Real Estate Investors, Inc. v. Columbia Pictures Industries, Inc.,
508 U.S. 49 (1993) 13

Resqnet.com, Inc. v. Lansa, Inc.,
533 F. Supp. 2d 397 (S.D.N.Y. 2008) 17

Rite-Hite Corp. v. Kelley Co.,
819 F.2d 1120 (Fed. Cir. 1987) 9, 18

Stickle v. Heublein,
716 F.2d 1550 (Fed. Cir. 1983) 9

Stryker Corp. v. Zimmer, Inc.,
782 F.3d 649 (Fed. Cir. 2014) 17

Stryker Corp. v. Zimmer, Inc.,
No. 14-1520 5

TE-TA-MA Truth Foundation-Family of URI, Inc. v. World Church of the Creator,
392 F.3d 248 (7th Cir. 2004) 7

TGIP, Inc. v. AT&T Corp.,
527 F. Supp. 2d 561 (E.D. Tex. 2007) 17

STATUTES

15 U.S.C. § 15(a) 23

17 U.S.C. § 504(c)(2) 6

35 U.S.C. § 284 ..... passim

35 U.S.C. § 285 ..... passim

Patent Act of 1793, ch. 11, § 5,
1 Stat. 318, 322 (repealed 1836) 8

Patent Act of 1836, ch. 357, § 14,
5 Stat. 117, 123 8

OTHER AUTHORITIES

Justin P. Huddleson, Objectively Reckless:
A Semi-Empirical Evaluation of
In re Seagate,
15 B.U. J. Sci. & Tech. L. 102 (2009) 20

Sen. John Ruggles, S. Report Accompanying
Senate Bill No. 239, at 6 (Apr. 28, 1836) 9

INTEREST OF THE *AMICI CURIAE*[1]

Amici curiae are Nokia Technologies Oy and Nokia USA Inc. (collectively, "Nokia"). Nokia is a global leader and innovator in the telecommunications equipment and services industry. The Nokia group of companies have cumulatively invested over $70 billion in research and development relating to mobile communications. As a result of this substantial commitment, Nokia currently owns more than 10,000 patent families, including a large number of standard-essential patents. Nokia continues to invest heavily in research and development and to license and expand its industry-leading patent portfolio. For example, Nokia continues to develop and license innovations that are powering the next revolution in computing and mobility: the "programmable world" where intelligent connections bring millions of everyday objects online. This work includes a team of experts in areas including digital healthcare, digital

---

[1] Pursuant to Supreme Court Rule 37.6, counsel for *amici curiae* state that no counsel for a party authored this brief in whole or in part, or made a monetary contribution intended to fund the preparation or submission of this brief, and no other person other than *amici curiae*, its members, or its counsel made such a contribution. Pursuant to Supreme Court Rule 37.2, counsel for *amici curiae* represent that all counsel of record received notice of *amici curiae*'s intent to file this *amicus curiae* brief. Pursuant to Supreme Court Rule 37.3, counsel for *amici curiae* represent that Petitioner gave written consent to counsel for *amici curiae* to file this *amici curiae* brief. Respondent has refused to provide consent.

multimedia, imaging and sensing, wireless connectivity and power management, advanced materials, and others.

Nokia and its parent company have been involved in numerous patent cases in U.S. district courts, both as a plaintiff and a defendant, including cases where enhanced damages under 35 U.S.C. § 284 were sought by or against Nokia. Nokia is a significant patent owner that might seek such enhanced damages for certain kinds of patent infringement in U.S. district courts.

Nokia's interest in this case is to advocate for the appropriate statement and application of legal standards governing enhanced damages under 35 U.S.C. § 284, and to ensure that those standards balance the interests of patent holders and those of users of patented technology. Companies like Nokia must be assured that their past, present, and future substantial research and development efforts are protectable under the U.S. patent regime and that, upon an appropriate request and showing, they are able to receive proper remediation and adequate compensation, including recovery of enhanced damages, for unauthorized uses of their patented technologies. Although Nokia does not take any ultimate position on the facts of this specific case, Nokia supports Petitioner's position that this Court should grant a writ of certiorari in this case in order to provide guidance as to the appropriate standard governing an award of enhanced damages under 35 U.S.C. § 284.

SUMMARY OF ARGUMENT

Section 284 of the Patent Act grants to trial courts the discretion to award enhanced damages in patent cases. 35 U.S.C. § 284. Despite the plain language of this statute, the Federal Circuit has imposed a willfulness requirement onto § 284 and has set forth an overly rigid two-part test and an unreasonably high burden of proof for determining when a defendant has committed willful infringement. These requirements conflict with recent guidance from the Supreme Court and make it unreasonably difficult for patent owners to obtain enhanced damages in many patent cases, thus encouraging continued infringement and discouraging further investment in innovation.

This Court recently recognized, in the context of attorney fees awards under section 285 of the Patent Act, that such rigid tests are not warranted by statute and improperly limit the exercise of the district court's discretion. *Octane Fitness, LLC v. ICON Health & Fitness, Inc.*, 134 S. Ct. 1749, 1755-56. This Court's reasoning in *Octane Fitness* is equally applicable in the context of awarding enhanced damages, and a similar approach should be applied. Requiring the same approach to enhanced damages under § 284 as that applied to fee shifting under § 285 also properly balances the interests of patent holders against those of accused infringers to ensure that patent holders are properly compensated and that improper conduct, such as copying, holding out in licensing discussions, bad faith, and/or other

dilatory negotiation tactics, or other unreasonable conduct by implementers of patented technologies is both deterred and remediated when the facts of a given case as a whole warrant an award of enhanced damages.

The Federal Circuit's overly rigid standard for awarding enhanced damages is unfair to patent owners in many patent cases, including, for example, those that may involve standard-essential patents. Because patent owners often agree to license such patents on fair, reasonable, and non-discriminatory ("FRAND") terms, which is viewed by some as a limitation on available remedies, infringing implementers more and more frequently are engaging in dilatory and other unfair negotiation tactics to avoid paying appropriate compensation under a license, as these infringers believe under current rules that they likely will never have to pay any more than a fair and reasonable royalty for their infringing use. As a result, such infringing implementers frequently choose to ignore the patent rights of the owners of standard-essential patents and to continue to infringe without significant risk of remediation or retribution for their unreasonable conduct. District courts should have the discretion to award enhanced damages under appropriate circumstances to deter such conduct.

The need for review of the currently-applied enhanced damages standard is made even more apparent by the fact that this standard is also at issue in a co-pending petition for a writ of certiorari

in *Stryker Corporation v. Zimmer, Inc.*, No. 14-1520, in which Nokia has contemporaneously filed an amicus brief setting forth the same arguments presented below. This issue is of utmost importance to the patent community. This Court should therefore grant Petitioner's petition for a writ of certiorari in order to reevaluate the current judicially-created standard for an award of enhanced damages under § 284. The current standard lacks support in the statute, conflicts with the guidance of this Court, and is out of line with important policy considerations.

ARGUMENT

I. AN AWARD OF ENHANCED DAMAGES UNDER § 284 SHOULD NOT REQUIRE A FINDING OF WILLFULNESS

A. The Statutory Language of § 284 Provides No Support for a Willfulness Requirement

Section 284 of the Patent Act states that "the court may increase the damages up to three times the amount found or assessed." 35 U.S.C. § 284. This section does not limit the circumstances in which such enhanced damages are appropriate, instead leaving the decision to the discretion of the trial court. *See id.* The statute does not require any subjective inquiry into the mind of the accused infringer, nor does it identify any specific criteria

that must be met before the district court may exercise its discretion to award enhanced damages.

Despite the broad discretion afforded by § 284, the Federal Circuit has held that increased damages are only available when a defendant is guilty of willful infringement. *See In re Seagate Tech., LLC*, 497 F.3d 1360, 1368 (Fed. Cir. 2007). The Federal Circuit, moreover, has further restricted the availability of enhanced damages with an overly rigid two-part test for determining whether this willfulness standard is met. Under the first prong of this concocted test, a patent owner "must show by clear and convincing evidence that the infringer acted despite an objectively high likelihood that its actions constituted infringement of a valid patent." *Id.* at 1371. If this threshold objective standard is satisfied, the patent owner must then prove that the objectively-defined risk "was either known or so obvious that it should have been known to the accused infringer." *Id.* This added requirement of willfulness is an error that must be corrected.

When grafting a willfulness requirement onto § 284, the Federal Circuit sought guidance from the enhanced damages provision in copyright law. *See id.* at 1370. Although copyright law may provide guidance in limited circumstances, the Federal Circuit's reliance on copyright law in this context was improper. Unlike § 284 of the Patent Act, in the Copyright Act Congress explicitly set forth a willfulness requirement for a finding of enhanced damages. 17 U.S.C. § 504(c)(2) ("In a case where the

copyright owner sustains the burden of proving, and the court finds, that infringement was committed willfully, the court in its discretion may increase the award of statutory damages....."). The glaring absence of such a requirement in the Patent Act suggests that Congress did *not* intend for there to be such a requirement. *See Seagate*, 497 F.3d at 1381-82 (Gajarsa, J., concurring). Clear statements from Congress should exist before placing limits on recovery for patent infringement. *See Gen. Motors Corp. v. Devex Corp.*, 461 U.S. 648, 653 (1983) ("When Congress wished to limit an element of recovery in a patent infringement action, it said so explicitly."). Conversely, statutes lacking clear statements generally have been interpreted as giving courts broad equitable discretion to award enhanced damages. *See, e.g., TE-TA-MA Truth Foundation-Family of URI, Inc. v. World Church of the Creator*, 392 F.3d 248, 261 (7th Cir. 2004) ("The broad discretion accorded a district court under § 1117(a)...is inconsistent with an interpretation that restricts a prevailing plaintiff to recovery of fees only in cases of willful infringement."). Given the broad language of § 284 and the omission of a willfulness requirement, the decision regarding whether to award enhanced damages should be left to the discretion of the court upon consideration of the totality of the circumstances.

B. The Federal Circuit's Grafting of a Willfulness Requirement onto § 284 is Contrary to the Legislative History of the Statute and Ignores the Remedial Purpose of Enhanced Damages

When *Seagate* was first decided, two Federal Circuit judges advocated for the removal of the willfulness requirement from § 284. *Seagate*, 497 F.3d at 1376-84 (Gajarsa, J., concurring). As Judges Gajarsa and Newman set forth in their concurring opinion, the judicially manufactured willfulness requirement finds no support in the legislative history, ignores the compensatory function of enhanced damages, and improperly limits judicial discretion.

The first patent statute to include a provision for enhanced damages included a mandatory requirement for an infringer to pay enhanced damages. Patent Act of 1793, ch. 11, § 5, 1 Stat. 318, 322 (repealed 1836). The Patent Act of 1836 removed this mandatory requirement and instead granted courts the discretion to award enhanced damages "according to the circumstances of the case." Patent Act of 1836, ch. 357, § 14, 5 Stat. 117, 123. As emphasized by Judge Gajarsa, "[n]othing in the phrase 'according to the circumstances of the case' implies that the district court's discretion to award enhanced damages is contingent upon a finding of willfulness." *Seagate*, 497 F.3d at 1377 (Gajarsa, J., concurring). The enhanced damages provision of the current § 284 is substantively identical to the

provision in the 1836 Act. *See* 35 U.S.C. § 284. It is therefore clear that the purpose of this statute was to provide discretion to the courts to enhance patent damages.

Requiring willfulness for an award of enhanced damages also ignores the compensatory aspect of such damages. As originally drafted, discretionary enhanced damages were designed, at least in part, to ensure that the patent owner was properly compensated for infringement. *See* Sen. John Ruggles, S. Report Accompanying Senate Bill No. 239, at 6 (Apr. 28, 1836) (recognizing that one problem to be addressed by the 1836 Patent Act was the fact that pre-1836 patent law "offer[ed] an inadequate remedy for the [infringement] injury"). And even the Federal Circuit has recognized that enhanced damages may be necessary to properly compensate a patent owner. *See, e.g., King Instruments Corp. v. Perego*, 65 F.3d 941, 951 n. 6 (Fed. Cir. 1995) ("Such discretionary increases may be appropriate where plaintiffs cannot prove direct and foreseeable damages in the form of lost profits."); *Rite-Hite Corp. v. Kelley Co.*, 819 F.2d 1120, 1126 (Fed. Cir. 1987) ("Whether or not willfulness is found, the court has authority to consider the degree of culpability of the tortfeasor. The measure of damages...provides an opportunity for the trial court to balance equitable concerns as it determines whether and how to recompense the successful litigant."); *Stickle v. Heublein*, 716 F.2d 1550, 1563 (Fed. Cir. 1983) ("[T]he trial court may award an amount of damages greater than a reasonable

royalty so that the award is adequate to compensate for the infringement."). As explained by Judge Gajarsa, situations in which an award of enhanced damages may be necessary to adequately compensate a patent owner, irrespective of a willfulness finding, could include, for example, those where a defendant's sales data is lost prior to discovery or where a court determines that enhanced damages are more appropriate than injunctive relief. *Seagate*, 497 F.3d at 1378 (Gajarsa, J., concurring).

Another example where an award of enhanced damages may be appropriate without a finding of willfulness is in cases involving standard-essential patents. When a patent is declared essential to an industry standard, the patent owner is often obligated to license the patent on FRAND terms. When a patent owner has expressed a willingness to license its patent on FRAND terms, an infringing implementer may believe that the patent owner has limited its available remedies for unauthorized use and, as a result, may engage in dilatory or hold-out tactics in order to delay, if not outright avoid, paying for a license. Infringing implementers may be incentivized to engage in dilatory tactics because they believe that any royalties awarded in a patent case would be effectively capped at a FRAND rate. The FRAND commitment, therefore, may work to provide an incentive for the infringing implementer to continue infringement without payment of compensation for as long as possible in order to gain all of the benefits of postponed cash outlays or other value transfers. District courts should have the

discretion to award enhanced damages under § 284 in these kinds of situations in order to fully compensate patent owners and deter such harmful hold-out tactics.

Moreover, the historical practice of awarding enhanced damages upon a finding of willfulness does not justify a general rule requiring willfulness as a prerequisite for such awards. *Cf. eBay Inc. v. MercExchange, L.L.C.*, 547 U.S. 388, 395 (2006) (observing that the historical practice of granting injunctions in the vast majority of patent cases "does not *entitle* a patentee to a permanent injunction or justify a *general rule* that such injunctions should issue."). Because willful infringement was the most common reason for a court to award enhanced damages, the case law quickly began to focus on that issue to the exclusion of other circumstances that may have warranted exercise of the district court's discretion.

The Federal Circuit's grafting of a willfulness requirement onto § 284 is contrary to the statute's legislative history, ignores the compensatory aspect of enhanced damages, and improperly eliminates the discretion granted to the district court. This Court should therefore grant certiorari in this case to review and remove the willfulness requirement.

II. REVIEW IS NEEDED TO RECONCILE THE LEGAL STANDARD FOR ENHANCED DAMAGES UNDER SECTION 284 WITH THIS COURT'S PRECEDENT REGARDING SECTION 285

This Court recently rejected the Federal Circuit's overly rigid test for awarding attorney fees under § 285 of the Patent Act, as well as the heightened standard of proof for such fee-shifting determinations. As discussed below, the reasoning applied by the Court under § 285 applies with equal force to § 284.

A. This Court's Rejection of the Federal Circuit's Unduly Rigid Test for Fee-Shifting Under § 285 Favors Rejection of the Federal Circuit's Equally Rigid Test Under § 284

Section 285 states that "[t]he court in exceptional cases may award reasonable attorney fees to the prevailing party." 35 U.S.C. § 285. The Federal Circuit previously required a showing that a case either involved "material inappropriate conduct" or was both "objectively baseless" and "brought in subjective bad faith" in order to award attorneys' fees. *Brooks Furniture Mfg., Inc. v. Dutailier Int'l, Inc.*, 393 F.3d 1378, 1382 (Fed. Cir. 2005). This Court struck down that test as "unduly rigid," finding that the test "impermissibly encumber[ed] the statutory grant of discretion to district courts." *Octane Fitness, LLC v. ICON Health & Fitness, Inc.*,

134 S. Ct. 1749, 1756 (2014). The Court also noted that the Federal Circuit's requirement that "a district court must determine *both* that the litigation is objectively baseless *and* that the plaintiff brought it in subjective bad faith" was too restrictive. *Id.* at 1757. The Court held instead that either objectively baseless litigation or a plaintiff's subjective bad faith may independently warrant a fee award. *Id.*

The Court further rejected the Federal Circuit's reliance on a prior Supreme Court decision to support its objective/subjective test for fee-shifting. *Id.* The Federal Circuit had imported the standard set forth in *Prof'l Real Estate Investors, Inc. v. Columbia Pictures Industries, Inc.*, 508 U.S. 49 (1993), into § 285. *Id.* The Court held that this importation was improper, noting that "the *PRE* standard finds no roots in the text of § 285." *Id.*

The Court held that the proper test for determining whether fee-shifting is appropriate is the consideration of the totality of the circumstances on a case-by-case basis. *Id.* at 1756. Thus, even though § 285 is limited to "exceptional cases," the Court left the determination of whether fee-shifting is appropriate to the discretion of the district court by allowing the district court to consider the totality of the circumstances.

This Court's reasoning in *Octane Fitness* applies with equal, or even greater, force to awards of increased damages under § 284, for multiple reasons. First, Section 284 provides even greater discretion to

the district court than does Section 285: a district court "may increase the damages up to three times the amount found or assessed." 35 U.S.C. § 284. Like the test for § 285 rejected by this Court, the current Federal Circuit test for § 284 "superimposes an inflexible framework onto statutory text that is inherently flexible." *Octane Fitness*, 134 S. Ct. at 1756.

Second, the objective/subjective test used by the Federal Circuit to determine whether to award enhanced damages is nearly identical to the § 285 test rejected by this Court in *Octane Fitness*, despite that section having a more restrictive "exceptional case" requirement. *See iLOR, LLC v. Google, Inc.*, 631 F.3d 1372, 1377 (Fed. Cir. 2011) ("The objective baselessness standard for enhanced damages and attorneys' fees...under *Brooks Furniture* is identical to the objective recklessness standard for enhanced damages and attorneys' fees against an accused infringer for § 284 willful infringement actions."). This Court should therefore overturn the § 284 test for the same reasons it rejected the § 285 test.

Third, the Federal Circuit's current test for enhanced damages, like its old test for fee-shifting, was predicated on this Court's decision in *PRE*. *See Halo Elecs., Inc. v. Pulse Elecs., Inc.*, 769 F.3d 1371, 1384 (Fed. Cir. 2014) (O'Malley, J., concurring). In *Octane Fitness*, this Court told the Federal Circuit that its interpretation of *PRE* was wrong. *Octane Fitness*, 134 S. Ct. at 1757. "Just as 'the *PRE* standard finds no roots in the text of § 285,' there is

nothing in the text of § 284 that justifies the use of the *PRE* narrow standard." *Halo Elecs.*, 769 F.3d at 1384 (O'Malley, J., concurring) (quoting *Octane Fitness*, 134 S. Ct. at 1757). This Court should thus reject the Federal Circuit's reliance on *PRE* to construct an overly rigid test for awarding enhanced damages under § 284.

Despite the similarities between § 284 and § 285 and the tests constructed by the Federal Circuit to apply those statutes, the Federal Circuit has to date persisted in applying an overly rigid standard to § 284, even after this Court rejected the basis for that standard in *Octane Fitness*. Review is required to reconcile these tests and preserve flexibility and discretion in awarding damages under § 284 as the Court has done for § 285.

B. This Court's Precedent Confirms that a Heightened Standard of Proof Is Not Required to Award Enhanced Damages

In *Octane Fitness*, this Court also rejected the Federal Circuit's requirement that patent owners establish their entitlement to fees under § 285 by clear and convincing evidence, noting that "patent-infringement litigation has always been governed by a preponderance of the evidence standard." *Octane Fitness*, 134 S. Ct. at 1758. The Court noted that "nothing in § 285 demands such a high standard of proof." *Id.* Instead, "Section 285 demands a simple discretionary inquiry." *Id.*

Like § 285, § 284 contains no language that justifies a higher standard of proof. Section 284 allows enhanced damages at the discretion of the district court, and the award of such damages should also be subject to the lesser preponderance of the evidence standard governing infringement damages. This Court should grant certiorari to remove the heightened burden the Federal Circuit has imposed on patent owners to establish enhanced damages under § 284.

III. THE FEDERAL CIRCUIT'S TEST IS OVERLY RIGID EVEN WITH RESPECT TO WILLFULNESS

Although willfulness should not be a strict requirement, evidence of willful infringement may support a finding of enhanced damages. However, the Federal Circuit's two-part willfulness test should be rejected even when willfulness is at issue. It improperly permits the focus of the inquiry to be on an infringer's post-suit activities and fails to account for pre-suit conduct that may warrant an award of enhanced damages. Section 284 is not so limited. Review is necessary to remove this test and replace it with a standard that allows the district court to consider the totality of the circumstances, including an infringer's pre-suit activities.

A. The Federal Circuit's Willfulness Test Encourages Free-Riding by Infringers and Discourages Innovation

When applying the Federal Circuit's current strict two-part willfulness test, courts have focused on the merits of a defendant's post-litigation defenses, rather than on a defendant's pre-suit actions. *See, e.g., Stryker Corp. v. Zimmer, Inc.*, 782 F.3d 649, 661-62 (Fed. Cir. 2014) (holding that Zimmer's post-litigation defenses precluded a finding of willfulness, despite the fact that the evidence showed that "Zimmer all but instructed its design team to copy Stryker's patents"). District courts have increasingly held that a close call on infringement or the existence of a substantial invalidity defense precludes a finding of willfulness. *See, e.g., Resqnet.com, Inc. v. Lansa, Inc.*, 533 F. Supp. 2d 397, 420 (S.D.N.Y. 2008); *TGIP, Inc. v. AT&T Corp.*, 527 F. Supp. 2d 561, 579 (E.D. Tex. 2007).

Under the Federal Circuit's willfulness standard, no matter how unreasonable, reckless, or intentional an infringer's actions are pre-suit, willful infringers can attempt to avoid the consequences of their actions by simply putting forth a non-frivolous post-suit defense. This does not make sense from a policy perspective. Courts should also focus on objective pre-suit factors, such as the facts known to the accused infringer at the time the accused infringer learned of the patent and proceeded with actions relevant to infringement. Only by looking at all of the relevant evidence can the trier of fact

decide whether the accused infringer committed willful infringement. As the Federal Circuit previously recognized, the mere fact that an infringer is able to come up with some plausible defenses at trial should not negate the infringer's earlier unreasonable, bad faith, or reckless actions. *See Datascape Corp. v. SMEC, Inc.*, 879 F.2d 820, 829 n. 8 (Fed. Cir. 1989) ("[Defendants] will not be permitted to be saved from their flagrant disregard for the patent laws by the fortuity that when the patent in issue was closely scrutinized in this lawsuit, a close question of obviousness was presented.") (internal citation omitted).

Awarding enhanced damages for willful infringement punishes culpable behavior and deters potential infringers from engaging in such behavior. *See Rite-Hite*, 819 F.2d at 1126 ("The role of a finding of 'willfulness' in the law of infringement is partly as...an economic deterrent to the tort of infringement – and partly as a basis for making economically whole one who has been wronged."). The Federal Circuit's current rigid willfulness standard fails to accomplish these important objectives. Under the current standard, an infringer who intentionally chose to infringe a patent, believing fully that the act was infringement, and that was later judged to be infringing, could still successfully avoid enhanced damages by concocting, post-suit, a non-frivolous (but ultimately incorrect) defense. This result encourages infringers to disregard known patent rights of innovators because there is little chance that doing so will result in greater penalty. With a lower threat

of being punished, efficient infringement becomes a rational business model, and companies may choose to take the lower risk of willfully infringing a patent to obtain the benefit of free-riding on others' innovation. The willfulness inquiry as a factor in an enhanced damages analysis serves to deter unreasonable behavior, such as knowing infringement, and the determination of whether enhanced damages are appropriate should enable that goal to be fulfilled. The Federal Circuit's overly rigid test does not do so.

The current willfulness standard is equally problematic with regard to standard-essential patents, such as patents essential to cellular telecommunications standards. After a patent is declared essential to an industry standard, if a company decides to implement the standard and is on notice of another's essential patent, that implementer should take steps to either timely obtain a license and pay appropriate royalties or take all necessary steps to reasonably determine that a license is not needed. However, as discussed above, the implementer has little incentive to timely enter into a license and begin making appropriate payments if it believes that it will at most have to pay FRAND terms for such a license at the end of the day, even if it engages in unreasonable conduct in negotiations, such as hold-out tactics to avoid paying appropriate compensation. If the implementer chooses to ignore the patent rights of others and refuses to timely enter into a license, it is free-riding on the intellectual property rights of others. The

availability of enhanced damages may provide a needed deterrent against such hold-out tactics and free-riding because the infringing implementer could face much higher damages awards in appropriate cases where its conduct so warrants. The Federal Circuit's rigid test, however, removes much of the teeth from this deterrent, and, as a result, users of essential patented technology are incentivized to continue holding out and free-riding as long as possible because, under the current regime, the risk of enhanced damages is mitigated by the possibility that post-suit rationalizations will avoid enhanced damages. Without a meaningful deterrent, there is little risk in this approach and much to gain from continued use of technology without paying for it.

The pre-*Seagate* process for enhancing damages was finely balanced between patent owners and infringers. *See* Justin P. Huddleson, *Objectively Reckless: A Semi-Empirical Evaluation of In re Seagate*, 15 B.U. J. SCI. & TECH. L. 102, 135 (2009). The Federal Circuit's more recent rigid test places most of the burden on the patent owner, thereby increasing the chance that implementers, including willful infringers, will more easily evade enhanced damages. If patent owners are unlikely to get enhanced damages in cases, including those involving willful infringement, some rational patent owners may choose not to pursue every violation. Additionally, the increased costs of proving willfulness, combined with the potential for insufficient compensation, greatly decreases

incentives for patenting, thus discouraging continued investment in innovation.

The ability to deter willful infringement is part of a patent's value. The incentive for an inventor to patent and disclose an invention is only as strong as the property rights of a patent. "The strength of this property right is crucial to foster innovation that would not occur except for the prospect of a patent because companies can expect increased profits from investments in research and development." Huddleson, *supra*. The current willfulness standard set forth in *Seagate* weakens the property rights of a patent by effectively encouraging willful infringement. This Court should thus intervene and set forth a more flexible, discretionary willfulness standard that is consistent with the discretion afforded by § 284.

B. The High Standard of Proof Required to Satisfy the Willfulness Standard Creates an Unreasonable Burden for a Patent Owner to Obtain Enhanced Damages

Another concern with the Federal Circuit's overly rigid willfulness standard for enhanced damages is that it places the burden on the patent owner to establish both prongs of the current test by clear and convincing evidence. *See Seagate*, 497 F.3d at 1371. This places an unreasonably high burden on the patent owner to obtain an enhanced damages award. The statute contains no such requirement,

and the heightened standard imposed by the Federal Circuit undermines the purpose behind it.

When discussing Congress's silence regarding a standard of proof in a statute, this Court has noted that "[t]his silence is inconsistent with the view that Congress intended to require a special, heightened standard of proof." *Grogan v. Garner*, 498 U.S. 279, 286 (1991). Here, Congress's silence in the legislative history and text of § 284 suggests that a court's discretion to increase a damage award should not be constrained by a requirement of proof higher than a preponderance of the evidence.

As this Court has recognized, a "preponderance-of-the-evidence standard allows both parties to share the risk of error in roughly equal fashion," whereas "[a]ny other standard expresses a preference for one side's interests." *Herman & MacLean v. Huddleston*, 459 U.S. 375, 390 (1983) (internal quotations omitted). The issue of whether to award enhanced damages only arises if the fact-finder has already determined that the defendant has actually infringed a valid and enforceable patent. *See Seagate*, 497 F.3d at 1368. In such cases, the patent owner and the infringer should equally share the risk of an incorrect factual resolution in an enhanced damages determination. Factual issues in an enhanced damages determination should therefore be resolved under a preponderance of the evidence standard.

Finally, it is worth noting that this Court has held that a preponderance of the evidence standard sufficed for recovery under the antitrust laws. *See Herman & McLean*, 459 U.S. at 390. This is significant because a successful antitrust plaintiff automatically recovers treble damages. 15 U.S.C. § 15(a). This demonstrates that heightened burdens of proof are not required for treble damages awards, and there is no reason to impose such a heightened standard on § 284. This Court should grant certiorari in this case to clarify the appropriate standard for enhanced damages.

IV. THE FEDERAL CIRCUIT IS DIVIDED ON THE ISSUE OF WILLFULNESS

The need for this Court's intervention is further demonstrated by the Federal Circuit's division on willfulness issues. As discussed above, in *Seagate*, two Federal Circuit judges expressed their belief that there should be no willfulness requirement for the award of enhanced damages under § 284, emphasizing that "the language of the statute unambiguously omits any such requirement." *Seagate*, 497 F.3d at 1376-77 (Gajarsa, J., concurring).

Similarly, in the case underlying the present petition for certiorari, two other Federal Circuit judges stated that "it is time for the full court to reevaluate our standard for the imposition of enhanced damages in light of the Supreme Court's recent decisions." *Halo Elecs.*, 769 F.3d at 1384

(O'Malley, J., concurring). Noting that the current test for willfulness is analogous to the test for attorneys' fees struck down by this Court in *Octane Fitness*, the judges emphasized the need for reconsideration of not only the willfulness standard, but also of the requirement to establish willfulness by clear and convincing evidence. *Id.* at 1348-85.

At least three of the currently sitting Federal Circuit judges have raised concerns over the unduly rigid test used to determine whether to award enhanced damages under § 284. It is clear that there is significant division among the Federal Circuit regarding the appropriate standard for § 284 determinations. This Court should thus grant certiorari in this case in order to resolve this division.

CONCLUSION

For the reasons set forth above, the Court should grant Petitioner's Petition for a Writ of Certiorari.

Respectfully submitted,

JOHN D. HAYNES
Counsel of Record
LINDSEY YEARGIN
ALSTON & BIRD LLP
1201 W. Peachtree St.
Atlanta, GA 30309
Tel. (404) 881-7000
john.haynes@alston.com

Counsel for Amici Curiae

July 24, 2015

No. 14-1513

In The
Supreme Court of the United States

HALO ELECTRONICS, INC.,

Petitioner,

v.

PULSE ELECTRONICS, INC. and
PULSE ELECTRONICS CORPORATION,

Respondents.

**On Petition For A Writ Of Certiorari
To The United States Court Of Appeals
For The Federal Circuit**

BRIEF IN OPPOSITION TO PETITION FOR A WRIT OF CERTIORARI

MARK L. HOGGE
Counsel of Record
DENTONS US LLP
1301 K Street, NW,
East Tower, Suite 600
Washington, DC 20005
Telephone: (202) 408-6400
mark.hogge@dentons.com

SHAILENDRA K. MAHESHWARI
CHARLES R. BRUTON
RAJESH C. NORONHA
DENTONS US LLP
1301 K Street, NW,
East Tower, Suite 600
Washington, DC 20005
Telephone: (202) 408-6400

Counsel for Respondents

COCKLE LEGAL BRIEFS (800) 225-6964
WWW.COCKLELEGALBRIEFS.COM

RESTATEMENT OF QUESTIONS PRESENTED

The questions on which Petitioner seeks *certiorari* mischaracterize Federal Circuit law and the facts of record. Petitioner's first question asserts that the Federal Circuit has applied a "rigid" test for the award of enhanced damages under 35 U.S.C. § 284 and that this "rigid" test is inconsistent with *Octane Fitness, LLC v. ICON Health & Fitness, Inc.*, 134 S. Ct. 1749 (2014), which dealt with awards of attorney fees under 35 U.S.C. § 285. In fact, the Federal Circuit applied a flexible two-part test for enhancement of patent infringement damages under 35 U.S.C. § 284, which is distinct from the test rejected in *Octane*.

Petitioner's second question asserts that the Federal Circuit did not correctly apply 35 U.S.C. § 271(a) when it refused to find that Respondents sold or "offer[ed] to sell" an allegedly infringing product "within the United States" in light of certain purported "facts" selected to support Petitioner's question. The "facts" relied on by Petitioner are mischaracterized and do not support the proposed question. In effect, Petitioner's second question is a hypothetical based on a limited and mischaracterized portion of the record.

RESTATEMENT OF QUESTIONS PRESENTED – Continued

Accordingly, a more accurate representation of the questions presented is:

1. Did the Federal Circuit err by applying a flexible, two-part test for enhancing patent infringement damages under 35 U.S.C. § 284, which is distinct from the test rejected in *Octane* for imposing attorney fees under 35 U.S.C. § 285?

2. Did the Federal Circuit err by holding that a U.S. defendant does not "sell" or "offer to sell" an allegedly infringing product "within the United States" under 35 U.S.C. § 271(a), when it negotiates with a U.S. customer in the U.S. regarding non-binding, potential terms of sale for products that are never present in the U.S., but are manufactured, shipped, and delivered outside the U.S., with all payments for the products being made outside the U.S.?

RULES 14.1(b) AND 29.6 STATEMENT

All parties are identified in the caption of this opposition brief. No publicly held corporation owns 10% or more of Pulse Electronics, Inc. No publicly held corporation owns 10% of more of Pulse Electronics Corporation. Pulse Electronics, Inc. operates as a subsidiary of Pulse Electronics Corporation.

TABLE OF CONTENTS

Page

RESTATEMENT OF QUESTIONS PRESENTED... i

RULES 14.1(b) AND 29.6 STATEMENT iii

TABLE OF CONTENTS iv

TABLE OF AUTHORITIES viii

STATEMENT OF THE CASE..... 1

I. 35 U.S.C. § 284 1

II. 35 U.S.C. § 271(a)..... 4

REASONS TO DENY THE PETITION..... 5

I. THIS IS NOT AN APPROPRIATE CASE FOR REEVALUATION OF ENHANCED DAMAGES UNDER 35 U.S.C. § 284..... 5

A. The Validity of the Underlying Patent Claims Is In Dispute 5

B. The Operative Facts Are In Dispute... 6

C. A Majority of the Federal Circuit En Banc Properly Concluded That This Case Is Not Appropriate for Reevaluating Enhanced Damages Under 35 U.S.C. § 284 7

D. Halo Waived Any Challenge to the *Seagate* Test..... 8

E. Halo Improperly Seeks Error Correction..... 12

F. Neither *Highmark* Nor *Octane* Bears on Issues In this Case 13

TABLE OF CONTENTS – Continued

Page

1. *Octane* and *Highmark* Interpret Only Section 285 and Say Nothing About Willfulness 15

2. *Octane* and *Highmark* Did Not Alter the "Objective Recklessness" Test Applied By the District Court In Finding No Willful Infringement; Nor Did They Change the Court of Appeals' Standard of Review 17

G. No Other Factors Warrant *Certiorari* 18

II. THE FEDERAL CIRCUIT'S DETERMINATION OF NO WILLFUL INFRINGEMENT UNDER 35 U.S.C. § 284 WAS CORRECT, AND FURTHER REVIEW IS UNNECESSARY 20

A. Halo Misstates the Law on Willful Infringement 21

1. A Court Can Properly Consider Post-Complaint Conduct When Assessing Willful Infringement 21

B. The District Court's Finding of No Willful Infringement Was Based on Halo's Failure to Prove Willfulness, Was Supported By Ample Evidence of Pulse's Reasonable Conduct, and Was Completely Correct 22

TABLE OF CONTENTS – Continued

Page

1. Trial Evidence Showed That Pulse's Conduct Was Objectively Reasonable and In Good Faith 23

2. Halo's Letters to Pulse In 2002 Did Not Allege Infringement; Only with the Complaint In 2007 Did Halo Allege Infringement, Whereupon Pulse Raised Substantial Defenses That Precluded Willful Infringement 25

3. Under *Bard*, the District Court Judge, Not the Jury, Decides the Objective Prong of Willfulness; Here, the Judge's Finding of No Willful Infringement Was Properly Affirmed 25

III. THIS IS NOT AN APPROPRIATE CASE FOR REEVALUATION OF THE TERRITORIAL REACH OF 35 U.S.C. § 271(a) 26

A. The Validity of the Underlying Patent Claims Is In Dispute 26

B. The Operative Facts Are In Dispute 27

C. The Federal Circuit Properly Held That This Case Is Not Appropriate for Reevaluating Infringement Under Section 271(a) 29

TABLE OF CONTENTS – Continued

Page

IV. THE FEDERAL CIRCUIT'S AFFIRMANCE OF THE GRANT OF PULSE'S MOTION FOR SUMMARY JUDGMENT UNDER 35 U.S.C. § 271(a) WAS CORRECT, AND FURTHER REVIEW IS UNNECESSARY... 32

A. Pulse's Limited Pricing Discussions In the United States Did Not Constitute Patent Infringement Because No Sales of Accused Products Occurred In the United States By Reason of Those Discussions 33

B. The District Court and Federal Circuit Properly Applied *Transocean* and Other Case Law In Granting Summary Judgment of No Direct Infringement "Within the United States." 35

CONCLUSION..... 41

TABLE OF AUTHORITIES

Page

CASES

Aro Mfg. Co. v. Convertible Top Replacement Co., 377 U.S. 476 (1964).....19, 21

Bard Peripheral Vascular, Inc. v. W.L. Gore & Assocs., Inc., 682 F.3d 1003 (Fed. Cir. 2012) ...*passim*

Brown v. Duchesne, 60 U.S. (19 How.) 183 (1856).....37

Deepsouth Packing Co., Inc. v. Laitram Corp., 406 U.S. 518 (1972).....37

DePuy Spine, Inc. v. Medtronic Sofamor Danek, Inc., 567 F.3d 1314 (Fed. Cir. 2009).....24

Dowagiac Mfg. Co. v. Minnesota Moline Plow Co., 235 U.S. 641 (1915).....37

Dowling v. United States, 473 U.S. 207 (1985).....19

Exxon Shipping Co. v. Baker, 554 U.S. 471 (2008).....14

Haas v. Peake, 544 F.3d 1306 (Fed. Cir. 2008) 10

Highmark, Inc. v. Allcare Health Mgmt. System, Inc., 134 S. Ct. 1744 (2014).....*passim*

Kiobel v. Royal Dutch Petroleum Co., 133 S. Ct. 1659 (2013).....27, 36

Knorr-Bremse Systeme Fuer Nutzfahrzeuge GmbH v. Dana Corp., 383 F.3d 1337 (Fed. Cir. 2004) (*en banc*) 14

Lee v. Mike's Novelties, Inc., 2013 WL 6097232 (Fed. Cir. Nov. 21, 2013).....18

TABLE OF AUTHORITIES – Continued

Page

MEMC Elec. Materials, Inc. v. Mitsubishi Materials Silicon Corp., 420 F.3d 1369 (Fed. Cir. 2005) 38

Meyer v. Holley, 537 U.S. 280 (2003) 10

Microsoft Corp. v. AT&T Corp., 550 U.S. 437 (2007) 4, 36, 37

Morrison v. Nat'l Australia Bank Ltd., 130 S. Ct. 2869 (2010) 36, 38

Octane Fitness, LLC v. ICON Health & Fitness, Inc., 134 S. Ct. 1749 (2014) ..... *passim*

Pentax Corp. v. Robison, 135 F.3d 760 (Fed. Cir. 1998) 10

Root v. Ry. Co., 105 U.S. 189 (1881) 14

Rotec Indus., Inc. v. Mitsubishi Corp., 215 F.3d 1246 (Fed. Cir. 2000) 39

Safeco Ins. Co. of Am. v. Burr, 551 U.S. 47 (2007) 14

In re Seagate Tech., LLC, 497 F.3d 1360 (Fed. Cir. 2007) (*en banc*) ..... *passim*

Seymour v. McCormick, 57 U.S. 480 (1853) 14, 19

Spine Solutions, Inc. v. Medtronic Sofamor Danek USA, Inc., 620 F.3d 1305 (Fed. Cir. 2010) 18, 24

Transocean Offshore Deepwater Drilling, Inc. v. Maersk Contractors USA, Inc., 617 F.3d 1296 (Fed. Cir. 2010) 4, 28, 29, 35, 38

Wood v. Milyard, 132 S. Ct. 1826 (2012) 10

TABLE OF AUTHORITIES – Continued

Page

STATUTES

35 U.S.C. § 154(a)(1) 38

35 U.S.C. § 271(a) ..... *passim*

35 U.S.C. § 284 ..... *passim*

35 U.S.C. § 285 ..... *passim*

Patent Act of 1836 19

Patent Act of 1946 20

Patent Law Amendments Act of 1984, Pub. L. No. 98-622, 98 Stat. 3383 37

RULES

S. Ct. Rule 10 ..... 12, 18

S. Ct. Rule 10(a) 18

S. Ct. Rule 10(b) 18

S. Ct. Rule 10(c) 18

OTHER AUTHORITIES

American Intellectual Property Law Association Amicus Br., *Highmark*, No. 12-1163 (U.S. Dec. 9, 2013) 16

Blue Cross Blue Shield Amicus Br., *Highmark*, No. 12-1163 (U.S. Dec. 9, 2013) 16

BSA/The Software Alliance Amicus Br., *Highmark*, No. 12-1163 (U.S. Jan. 24, 2014) 16

TABLE OF AUTHORITIES – Continued

Page

Google Amicus Br., *Highmark*, No. 12-1163 (U.S. Dec. 9, 2013).....15

Stephen M. Shapiro, Kenneth S. Geller, Timothy S. Bishop, Edward A. Hartnett, and Dan Himmelfarb, *Supreme Court Practice* (10th ed. 2013).....12, 17

Ten Intellectual Property Professors Amicus Br., *Transocean*, No. 13-43 (U.S. Aug. 5, 2013).....27, 28

STATEMENT OF THE CASE

In its petition for *certiorari*, Halo Electronics, Inc. ("Halo") poses questions for review that are not based on the facts of this case. It is only Halo's mischaracterizations of the facts, wholly unsupported by the record, that enable it to pose its two questions for review. Using those mischaracterizations, Halo urges the Court to take up issues that were never properly raised below (and have been waived) and to issue an impermissible advisory opinion. For that reason, and for the additional reasons discussed below, Respondents Pulse Electronics, Inc. and Pulse Electronics Corporation (collectively, "Pulse") urge the Court to deny Halo's petition.

Based on the facts, the real questions presented in this case regarding 35 U.S.C. §§ 284 and 271(a) are unremarkable, are easily answered in view of decades of precedent by this Court and the Federal Circuit and do not warrant review by the Court.

I. 35 U.S.C. § 284

Halo purports to seek review of the Federal Circuit's decision affirming a district court judgment that (1) correctly stated and applied the legal test for willful patent infringement established by *In re Seagate Tech., LLC*, 497 F.3d 1360 (Fed. Cir. 2007) (*en banc*), and (2) correctly considered and refused to award enhanced damages under Section 284. Halo urges the Court to consider a challenge to *Seagate*

that Halo waived in the proceedings below and to undertake a broad exercise in rewriting how Section 284 should be read and applied. Halo never asked either lower court to modify the *Seagate* test until it filed its petition for a rehearing *en banc* in the Federal Circuit. Nor did Halo previously argue on appeal that enhanced damages should be awarded absent a finding of willful infringement. Instead, in its post-trial and appellate briefs, Halo recited and relied on the *Seagate* standard and the Federal Circuit's subsequent, related opinion in *Bard Peripheral Vascular, Inc. v. W.L. Gore & Assocs., Inc.*, 682 F.3d 1003 (Fed. Cir. 2012). The Federal Circuit denied Halo's petition for a rehearing *en banc*. Halo's waiver and the lack of any decision below addressing the *Seagate* test are sufficient to deny *certiorari*.

Further, the lower court rulings do not present a reason for the Court to reevaluate Section 284 in this case. The Federal Circuit's affirmance does not conflict with any other federal court's decisions. Nor is it contrary to any precedent of this Court. Surely aware of its waiver of the issue it now seeks to argue, Halo makes a futile attempt to link this case to two others that the Court has recently decided – *Highmark, Inc. v. Allcare Health Mgmt. System, Inc.*, 134 S. Ct. 1744 (2014) [No. 12-1163] and *Octane Fitness, LLC v. ICON Health & Fitness, Inc.*, 134 S. Ct. 1749 (2014) [No. 12-1184]. However, those decisions have no bearing on this case. *Highmark* and *Octane* involve a different statute with a different purpose and different effects

than 35 U.S.C. § 284. As such, this issue does not warrant consideration by the Court.

Halo did not ask the Federal Circuit panel to overturn or revise *Seagate*. Nor did it ask the Federal Circuit to revise the standard for awarding enhanced damages under Section 284. Moreover, Halo has not shown that the alleged "rigid two-part test" for willful infringement was applied here in a "rigid" manner. In fact, in this case, the two-part test was clearly applied in a flexible manner, with all the evidence being considered, and the district court then determining that a finding of willful infringement and an award of enhanced damages were not appropriate. The Federal Circuit properly affirmed that finding.

Halo asserts that "district courts are now unable to impose enhanced damages if a defendant presents a non-frivolous defense, even if it acted in bad faith before the suit by copying the patentee's product, ignoring offers to license, and failing to investigate or develop any pre-suit defense." (Petition at p. 2.) This assertion is based on speculation, not on facts in the record. Moreover, it is not supported by any case cited by Halo.

In this case, the record does not support Halo's assertions of "bad faith" regarding "copying the patentee's product," "ignoring offers to license," or "failing to investigate or develop any pre-suit defense." Instead, the record shows Pulse's consistent good faith and strong, although unsuccessful, infringement defenses, including invalidity of Halo's

patent claims for obviousness. Based on the facts of record, the district court found no willful infringement, and the Federal Circuit affirmed that finding. Halo does not explain why those findings were erroneous. Finally, Halo never articulates any reason why, regardless of the finding of no willful infringement, it should be entitled to enhanced damages. Halo's petition should be denied.

II. 35 U.S.C. § 271(a)

Section 271(a) addresses liability for patent infringement by one who "offers to sell, or sells any patented invention, within the United States." Contrary to Halo's assertions, the record does not show that Pulse engaged in any sale "within the United States" through an alleged "requirements contract," since many critical aspects of a contract were missing, including essential terms of sale, an offer, and an acceptance. Likewise, the record does not show that there was an "offer to sell" in the U.S. by Pulse. Halo's discussion of *Transocean Offshore Deepwater Drilling, Inc. v. Maersk Contractors USA, Inc.*, 617 F.3d 1296 (Fed. Cir. 2010), is misplaced here. The facts of *Transocean* are distinguishable from the facts of this case. Moreover, the reasoning of *Transocean* follows the precedents of this Court that limit the extraterritorial application of U.S. patent law, as in *Microsoft Corporation v. AT&T Corporation*, 550 U.S. 437, 455 (2007).

Halo's petition satisfies none of this Court's criteria for *certiorari*. It presents fact-driven questions that were conclusively resolved against Halo by the courts below. There is admittedly no conflict among the circuits. The Federal Circuit's resolution of the issues now raised by Halo was correct and was based on decades of precedent. Accordingly, Halo's petition for *certiorari* should be denied.

REASONS TO DENY THE PETITION

I. THIS IS NOT AN APPROPRIATE CASE FOR REEVALUATION OF ENHANCED DAMAGES UNDER 35 U.S.C. § 284.

A. The Validity of the Underlying Patent Claims Is In Dispute.

The Federal Circuit's panel opinion recognized that Pulse had presented a strong challenge to the validity of each of Halo's asserted patent claims. (App. 21a: "[A]lthough Pulse was ultimately unsuccessful in challenging the validity of the Halo patents, Pulse did raise a substantial question as to the obviousness of the Halo patents"; App. 22a-23a: "It is true that the record evidence indisputably shows that almost all the limitations in the asserted claims were known elements of electronic packages that existed in the prior art.")

In its Conditional Cross-Petition, filed on July 24, 2015 [No. 15-121], Pulse discussed the highly questionable validity of Halo's asserted patent claims. As

argued there, the patents should have been found invalid, and the infringement finding should have been nullified. Halo's request for the Court to review the standard for awarding enhanced damages for patent infringement presupposes that the underlying patent claims are valid. However, the record clearly shows that Pulse had a good faith belief that Halo's asserted patent claims were invalid and that Pulse strongly challenged their validity. Standing alone, those facts make this an inappropriate case for a reevaluation of the standard for enhanced damages in patent infringement cases.

B. The Operative Facts Are In Dispute.

This case is filled with disputed facts regarding Pulse's allegedly infringing acts. Halo urges review by the Court based on Halo's biased and largely unsupported view of the facts. For example, Halo makes assertions regarding Pulse's "bad faith" in "copying the patentee's product," "ignoring offers to license," and "failing to investigate or develop any pre-suit defense." (Petition at 2.) However, the record shows that: (1) Pulse acted in good faith by investigating the patents in suit long before infringement was alleged and determining that they were invalid; (2) Pulse believed that Halo's patents represented obvious combinations of prior art components; (3) Pulse believed that licensing of Halo's invalid patents was unnecessary; and (4) Pulse formulated good faith and strong infringement defenses, including invalidity of Halo's patents for obviousness, once

Halo filed a complaint and accused Pulse of infringement.

On these facts, it is unlikely that Pulse's conduct would constitute willful infringement under *any* reasonable standard for assessing willful infringement. Halo offers no alternative standard for awarding enhanced damages and cites no proof of bad faith by Pulse that would warrant enhanced damages. Accordingly, this is not an appropriate case for reassessing the standard for enhanced damages under Section 284.

C. A Majority of the Federal Circuit *En Banc* Properly Concluded That This Case Is Not Appropriate for Reevaluating Enhanced Damages Under 35 U.S.C. § 284.

The fact that two Federal Circuit judges suggested that the standard for the award of enhanced damages under Section 284 should be revisited by the Federal Circuit does not mean that this is an appropriate case for this Court to review that standard. Importantly, the other nine judges who considered Halo's petition for rehearing *en banc* declined to rehear Halo's arguments on enhanced damages. (App. 137a-139a.) In an opinion concurring in the denial of rehearing *en banc*, two judges reasoned:

> In the present case, Halo raises no questions about the necessity of a willfulness finding for enhancement under § 284, about the

> decision-maker or burden of persuasion in the trial court, or about the standard of review in the appellate court. Notably, adoption of a more deferential standard of review, without any change in substantive or other standards, could not help Halo: The district court in this case rejected willfulness.

(App. 144a.) Accordingly, Halo did not properly raise the issue of enhancement of damages in the Federal Circuit, and it certainly did not show that, absent a finding of willful infringement, it is entitled to enhanced damages.

Halo simply asserts, without support, that the current standard for awarding enhanced damages under Section 284 is wrong and asks the Court to articulate a new standard that might entitle it to such damages. Based on the record below, where both the district court and the Federal Circuit correctly found no willful infringement, Halo is in no position to ask the Court to reevaluate the law of enhanced damages under Section 284, and that request should be denied.

D. Halo Waived Any Challenge to the *Seagate* Test.

Halo's appeal to the Federal Circuit raised the issue of the proper standard for assessing willful infringement, particularly the application of "*Seagate*'s 'objectively reasonable' requirement." There, Halo argued that the "objective" prong required to prove

willfulness under *Seagate* was ultimately a question of law subject to *de novo* review on appeal. Halo did not contradict Pulse's statement that the district court's judgment regarding the reasonableness of Pulse's defenses was also subject to *de novo* review. Nor did Halo argue that the *Bard* and *Seagate* decisions were in any way wrong, until Halo challenged them for the first time in its petition for a rehearing *en banc*. Instead, Halo embraced *Seagate* and *Bard*, insisted that they had not changed the law, and claimed to have satisfied their standards. *See, e.g.*, Halo Opening Brief at 35 ("The two-prong framework of *Seagate* and *Bard* should thus be interpreted to ensure that infringers are still subject to enhanced damages if they engage in conduct the law should deter."); Halo Opening Brief at 37 ("Those principles remain sound after *Bard*, even though it is now the judge, rather than the jury, that decides the objective prong.").

Halo's arguments on Section 284 have been waived. Halo did not appeal to the Federal Circuit on the standard for awarding enhanced damages under Section 284. Moreover, Halo did not argue in that appeal that it should be entitled to enhanced damages on any basis other than a finding of willfulness. Only in its petition for rehearing *en banc* did Halo first assert that the *Seagate/Bard* standard was too "rigid" to serve what it now sees as the purpose of Section 284. And, in its petition for *certiorari*, Halo asserts for the first time that enhanced damages

under Section 284 should be considered and awarded *apart from* a finding of willful infringement.

Halo's waiver should preclude consideration of the arguments it only now raises. *See Wood v. Milyard*, 132 S. Ct. 1826, 1834 (2012) ("[A]ppellate courts ordinarily abstain from entertaining issues that have not been raised and preserved in the court of first instance."); *see also Meyer v. Holley*, 537 U.S. 280, 291-92 (2003). Moreover, Halo's argument regarding the propriety of the *Seagate* test, which was made initially in its petition for rehearing *en banc*, was too late even for Federal Circuit review. *See Pentax Corp. v. Robison*, 135 F.3d 760, 762 (Fed. Cir. 1998) ("Just as this court will not address issues raised for the first time on appeal or issues not presented on appeal, we decline to address the government's new theory raised for the first time in its petition for rehearing."); *see also Haas v. Peake*, 544 F.3d 1306, 1308 (Fed. Cir. 2008). Accordingly, by reason of Halo's waiver and the lack of any decision below concerning Halo's belated challenge to *Seagate*, Halo's request for *certiorari* should be denied.

The record confirms that Halo has failed to preserve the question it now presents to this Court. For example, Halo agreed to the district court's jury instruction on willful infringement, which recited a standard based on *Seagate* and instructed the jury (1) to consider "all of the facts surrounding the alleged infringement," and (2) to "base [its] decision on the issue of willful infringement on all

of the evidence." In relevant part, the key instruction was:

> In this case Halo argues that Pulse willfully infringed Halo's patents. To prove willful infringement, Halo must first persuade you that Pulse infringed a valid claim of Halo's patent. . . . In addition, Halo must prove willful infringement by clear and convincing evidence. This means Halo must persuade you that it is highly probable that prior to the filing date of the complaint, Pulse acted with reckless disregard of the claims of Halo's patents. To demonstrate such reckless disregard, Halo must persuade you that Pulse actually knew or it was so obvious that Pulse should have known, that Pulse's actions constituted infringement of a valid patent. In deciding whether Pulse acted with reckless disregard for Halo's patents, **you should consider all of the facts** surrounding the alleged infringement including, but not limited to, whether Pulse acted in a manner consistent with the standard of commerce for its industry. You should base your decision on the issue of willful infringement on **all of the evidence**, regardless of which party presented it.

(A3631:2-25 (emphasis added) (all A___ cites are citations to the Court of Appeals appendix).) Halo also used the *Seagate* standard in its district court post-trial briefing. Halo never raised in the district court the argument it now asks this Court to consider.

In appealing to the Federal Circuit, Halo did not challenge *Seagate*. There, it argued exclusively that the district court had misinterpreted the evidence and misapplied the *Seagate* test. Only in seeking a rehearing *en banc* did Halo first seek a standard for assessing willful infringement different from the *Seagate* standard. It did not request a new standard for awarding enhanced damages until it filed this petition for *certiorari*.

Halo's failure to challenge the *Seagate* test below belies its argument that this Court should now consider whether a new standard for enhanced damages is necessary. If the issue is as critical as Halo suggests, the Court should have the benefit of a reasoned Federal Circuit decision based on arguments properly presented below.

E. Halo Improperly Seeks Error Correction.

"Error correction is . . . outside the mainstream of the Court's functions and . . . not among the 'compelling reasons' . . . that govern the grant of certiorari." Shapiro et al., *Supreme Court Practice* § 5.12(c)(3), p. 352 (10th ed. 2013). Further, "[a]s this Court's Rule 10 informs, '[a] petition for a writ of certiorari is rarely granted when the asserted error [is] . . . the misapplication of a properly stated rule of law.'" *Id.* (quoting S. Ct. Rule 10).

Here, Halo is asking the Court to correct the lower courts' alleged factual errors and misapplication of the willfulness test. Indeed, other than

presenting its waived challenge to *Seagate*, Halo's petition only rehashes its objections to factual and legal determinations below. However, Halo's disagreement with the lower courts' determination that Pulse's conduct was not objectively reckless is insufficient for *certiorari*. Here, the Court should not depart from its "mainstream . . . functions" to assume the role of a third-generation fact-finder, which is a clear example of "error correction." Halo's request should be denied.

F. Neither *Highmark* Nor *Octane* Bears on Issues In this Case.

Halo argues that the Court's rulings in *Highmark* and *Octane* influence this case. Even if Halo had not failed to preserve this issue, Halo's argument is wrong. Specifically, the determination by the Court that a district court's "exceptional case" finding under Section 285 is entitled to deference by the Federal Circuit does not impact this case.

This case and *Highmark/Octane* involve different statutes – Sections 284 and 285, respectively – that serve very different purposes and have very different effects. The issue in *Octane* and *Highmark* was the proper test and standard of review for awarding attorney fees for exceptional cases under Section 285. The issue here is enhanced damages under Section 284. Those issues are fundamentally different and dictate different governing tests and standards of review.

The key distinction is simple and critical. **Attorney fees are compensatory. Enhanced damages are punitive.** *Compare Knorr-Bremse Systeme Fuer Nutzfahrzeuge GmbH v. Dana Corp.*, 383 F.3d 1337, 1347 (Fed. Cir. 2004) (*en banc*) ("Attorney fees are compensatory. . . ."), *with Root v. Ry. Co.*, 105 U.S. 189, 196 (1881) ("[T]he Patent Act of 1836 confined the jury to the assessment of actual damages, leaving it to the discretion of the court to inflict punitive damages to the extent of trebling the verdict.") *and Exxon Shipping Co. v. Baker*, 554 U.S. 471, 507 (2008) (listing Section 284 among punitive damages statutes).

In *Octane*, the Court explained that compensatory attorney fees may be awarded under Section 285 for merely "unreasonable" litigation conduct. *Octane*, 134 S. Ct. at 1755-57. Unreasonable conduct is not enough, however, for punitive enhanced damages under Section 284. Rather, as the Court explained over 160 years ago, punitive or enhanced damages require willful infringement. *Seymour v. McCormick*, 57 U.S. 480, 488-89 (1853). Willfulness requires reckless behavior, which the Court has held requires "conduct violating an objective standard." *Safeco Ins. Co. of Am. v. Burr*, 551 U.S. 47, 68-69 (2007); *Seagate*, 497 F.3d at 1370-71 (citing *Safeco* for the proposition that recklessness is judged against an objective standard). *Safeco*, and the objective standard it requires, were neither expressly nor implicitly overruled by *Octane* or *Highmark*. Accordingly, the revised test that this Court established in *Octane* for

attorney fees does not and should not apply to the analysis for enhanced damages under Section 284.

In *Highmark* and *Octane*, the Court addressed Section 285, a statute wholly distinct from Section 284 that compensates a prevailing party for attorney fees. The Court's reasoning in those cases does not warrant the grant of Halo's petition here.

1. *Octane* and *Highmark* Interpret Only Section 285 and Say Nothing About Willfulness.

Halo's petition depends on its assertion that *Octane* and *Highmark* somehow affect the "objective recklessness" prong of willful infringement under Section 284. However, those opinions made clear that the "analysis begins and ends with the text of § 285." Section 284 and willfulness standards were not addressed at all. *Octane*, 134 S. Ct. at 1755.

Notably, several amici in *Highmark* specifically distinguished the "exceptional case" question at issue there from the willfulness question Halo presents here. *E.g.*, Google Amicus Br. 29-30, *Highmark*, No. 12-1163 (U.S. Dec. 9, 2013) ("No matter what standard or standard of review the Court adopts for exceptional case determinations and attorneys' fee awards under § 285, **it should make plain its holding does not implicate the distinct and critical question of the standard of review for enhanced damages due to willful infringement under 35 U.S.C. § 284.**") (emphasis added);

American Intellectual Property Law Association Amicus Br. 24-26, *Highmark*, No. 12-1163 (U.S. Dec. 9, 2013) (explaining that the fact-specific Section 285 inquiry is a poor candidate for a "unified precedent" with willful infringement decisions and the difference in magnitude of awards under the two provisions); Blue Cross Blue Shield Amicus Br. 8 n.3, *Highmark*, No. 12-1163 (U.S. Dec. 9, 2013) (**"attorney's fees awards are unique from other concepts in patent law such as willfulness under 35 U.S.C. § 284"**) (emphasis added); BSA/The Software Alliance Amicus Br. 22-24, *Highmark*, No. 12-1163 (U.S. Jan. 24, 2014) (describing three reasons a holding that an abuse-of-discretion standard of review applied to Section 285 would not apply to willfulness determinations).

As urged by the *amici*, both of the Court's decisions turned on the precise text of Section 285 and the meaning of the word "exceptional." *See Octane*, 134 S. Ct. at 1752-53, 1755-57 ("The question before us is whether the *Brooks Furniture* framework is consistent with the statutory text [of Section 285]"; examining the meaning of the word "exceptional" and determining the standard for an "'exceptional' case"); *Highmark*, 134 S. Ct. at 1748 ("Our holding in *Octane* settles this case: Because § 285 commits the determination whether a case is 'exceptional' to the discretion of the district court, that decision is to be reviewed on appeal for abuse of discretion."). Those decisions clearly do not apply to the text of other statutory provisions with different language.

2. *Octane* and *Highmark* Did Not Alter the "Objective Recklessness" Test Applied By the District Court In Finding No Willful Infringement; Nor Did They Change the Court of Appeals' Standard of Review.

Because *Octane* and *Highmark* only interpret Section 285, those decisions say nothing about the objective recklessness prong of the willful infringement standard under Section 284. The standards governing the willfulness inquiry under Section 284 and the Federal Circuit cases that develop those standards, *Bard* and *Seagate*, are not mentioned in *Octane* or *Highmark*.

The only possible effect of *Octane* and *Highmark* on this case would be *more deference* to the district court's decision to award Halo nothing under Section 284 based on the lack of willfulness, which the Federal Circuit has already affirmed under the more demanding *de novo* standard of review. Thus, remand for a more deferential review by the Federal Circuit would yield the same result. This Court generally does not grant *certiorari* to resolve questions that will not affect the case outcome. *See, e.g.*, Shapiro et al., *Supreme Court Practice* 249 (10th ed. 2013). Accordingly, there is no reason to remand this case, and Halo's petition should be denied.

G. No Other Factors Warrant *Certiorari*.

Rule 10 describes the "compelling reasons" that warrant review on a writ of *certiorari*. S. Ct. Rule 10. None of those "compelling reasons" is present here. There is no split of authority among the courts of appeals on the same important matter. S. Ct. Rule 10(a). Nor did the Federal Circuit "so far depart[] from the accepted and usual course of judicial proceedings, or sanction[] such a departure by a lower court, as to call for an exercise of this Court's supervisory power." *Id.* Finally, neither court below decided an important question of federal law that conflicts with relevant decisions of this Court or that should otherwise be settled by this Court. S. Ct. Rule 10(b, c).

Further, there are no conflicting decisions by different Federal Circuit panels concerning the *Seagate* test. Since *Seagate*, the Federal Circuit has frequently confirmed the two-part, objective-subjective nature of that test. Similarly, the Federal Circuit has consistently held that the threshold "objective recklessness" prong of the test is not met "when an 'accused infringer relies on a reasonable defense to a charge of infringement.'" *Lee v. Mike's Novelties, Inc.*, 2013 WL 6097232, at *5 (Fed. Cir. Nov. 21, 2013) (quoting *Spine Solutions, Inc. v. Medtronic Sofamor Danek USA, Inc.*, 620 F.3d 1305, 1319 (Fed. Cir. 2010)); *see also Bard*, 682 F.3d at 1005. Indeed, until its petition for rehearing *en banc*, Halo seemingly agreed with this consistent post-*Seagate* precedent. In any event, even if Halo had not waived

this issue, there is no split of authority within the Federal Circuit requiring the Court's intervention.

Finally, the willful infringement requirement for enhanced damages, which Halo appears to challenge in its petition, is based on longstanding Supreme Court precedent. Halo provides no compelling reason to eliminate that test and offers no alternative to it.

The Court examined the willfulness requirement over 160 years ago in *Seymour*, 57 U.S. at 488-89, noting that the Patent Act of 1836 granted judges "power to inflict vindictive or punitive damages" and holding that "there is no good reason why taking a man's property in an invention should be trebly punished" unless "the injury is wanton or malicious." The Federal Circuit, sitting *en banc* in *Seagate*, explained, "that an award of enhanced damages requires a showing of willful infringement" is a "well-established standard [that] accords with Supreme Court precedent." *Seagate*, 497 F.3d at 1368 (citing *Aro Mfg. Co. v. Convertible Top Replacement Co.*, 377 U.S. 476, 508 (1964) (enhanced damages under Section 284 are available for willful or bad-faith infringement); *Dowling v. United States*, 473 U.S. 207, 227 n.19 (1985) (enhanced damages under Section 284 are available for "willful infringement"); *Seymour*, 57 U.S. at 489).

In contrast to the long history of the enhanced damages statute, the attorney fee statute is relatively new. As noted in *Octane*, 134 S. Ct. at 1753, Congress created Section 285 attorney fees awards through the

Patent Act of 1946. Before the Act, the law "did not authorize the awarding of attorney's fees." *Id.* Because Congress first created a fee-shifting provision in 1946, there were no judicial precedents for the Act to incorporate. Accordingly, the Court's purely textual reading of Section 285 in *Octane* neither mandates nor suggests a similar treatment for Section 284, which has an extensive history of judicial interpretation. As such, Halo's argument for broadening the application of Section 284 has no merit and does not warrant *certiorari*.

II. THE FEDERAL CIRCUIT'S DETERMINATION OF NO WILLFUL INFRINGEMENT UNDER 35 U.S.C. § 284 WAS CORRECT, AND FURTHER REVIEW IS UNNECESSARY.

Halo's argument for enhanced damages improperly focuses only on pre-filing conduct, totally ignores Pulse's strong obviousness defense, and misstates how a willful infringement analysis should be conducted. Under Federal Circuit precedent, whether the objective prong of a willful infringement analysis has been met is a question of law. *Bard*, 682 F.3d at 1005 ("The court now holds that the threshold objective prong of the willfulness standard enunciated in *Seagate* is a question of law based on underlying mixed questions of law and fact and is subject to *de novo* review."). Here, the district court's finding of no willful infringement and determination of no enhanced damages were correct under the law, were

supported by substantial evidence, and were properly reviewed *de novo* and affirmed by the Federal Circuit. Halo offers no good reasons for the Court to review those determinations.

A. Halo Misstates the Law on Willful Infringement.

1. A Court Can Properly Consider Post-Complaint Conduct When Assessing Willful Infringement.

First, it is unclear why Halo thinks it is entitled to enhanced damages under Section 284. Halo criticizes the Federal Circuit for "graft[ing] a willfulness requirement into the statute" (Petition at 14), but Halo offers no alternative standard for determining when to award enhanced damages or that would entitle it to enhanced damages here.

The Court has made clear that enhanced damages are only available "in a case of willful or bad-faith infringement." *Aro*, 377 U.S. at 508. Halo failed to offer evidence below sufficient to support a determination of "willful or bad-faith infringement" by Pulse. Nevertheless, Halo now appears to contest the finding of no willful infringement by arguing that the analysis must focus only on an accused infringer's pre-suit conduct. (Petition at 22-23.) This argument fails.

Seagate does not limit willfulness evidence to pre-suit conduct and, in fact, acknowledges that the analysis can consider post-suit activity, stating, "It is certainly true that patent infringement is an ongoing

offense that can continue after litigation has commenced. . . . [W]hen an accused infringer's post-filing conduct is reckless, a patentee can move for a preliminary injunction, which generally provides an adequate remedy for combating post-filing willful infringement." *Seagate*, 497 F.3d at 1374 (citations omitted).

In this case, the record shows Halo did not accuse Pulse of infringement until it filed the complaint. Pulse's pre-suit conduct is undisputed. Pulse investigated the patents before suit was filed and determined that they were invalid by reason of prior art. Pulse also formed good faith infringement defenses, including invalidity of Halo's patents for obviousness, after Halo filed suit and asserted those defenses throughout the case. Thus, Pulse's conduct, both before and after the complaint was filed, demonstrated a total absence of bad faith and clearly did not constitute willful infringement.

B. The District Court's Finding of No Willful Infringement Was Based on Halo's Failure to Prove Willfulness, Was Supported By Ample Evidence of Pulse's Reasonable Conduct, and Was Completely Correct.

The district court correctly concluded (a) that Pulse offered strong evidence of a reasonable basis for its pre-suit conduct by showing that the obviousness defense, as proven at trial, was not objectively baseless or a sham and (b) that Halo had *not* satisfied its

burden of proof under the "objective prong" of willful infringement. The record shows that a Pulse engineer reviewed the patents and determined them invalid **before** Pulse engaged in its accused pre-suit conduct. At all times, Pulse acted in a reasonable manner and not in bad faith.

1. Trial Evidence Showed That Pulse's Conduct Was Objectively Reasonable and In Good Faith.

Halo's mischaracterizations of the trial evidence do not negate the objective reasonableness of Pulse's actions. In support of its willful infringement claim, Halo offered the deposition testimony of Carrie Munson, a Pulse marketing director, who testified: (1) that Pulse learned of Halo's patents in 1998 (A2241:8-13); (2) that John Kowalski, Pulse's President, received one or more letters from Halo concerning its patents in 2002 (A2241:24 – A2242:16; A5953; A5954); and (3) that after receiving the letters, Mr. Kowalski contacted Victor Aldaco, a Pulse engineer, for his views. (A2243:5-9.) As Ms. Munson further testified:

> Mr. Aldaco did a cursory search of the patent and was skeptical as to its validity based on his knowledge of prior art that we had and his remembering the part that we had developed 30 years ago that he actually was personally involved in doing tests or something as a young engineer.

(A2243:15-21.) Specifically, Mr. Aldaco believed that at least Pulse's part number PE60584 and various

other open header parts were prior art that rendered the Halo patents invalid. (A2243:15 – A2244:23.) The few hours that Mr. Aldaco spent reviewing the patents – all of which had similar figures and brief specifications – were more than sufficient for him to determine that each was obvious.

In sum, Mr. Aldaco made a conscious decision that the patents were probably invalid as obvious and were not a bar to Pulse. Pulse, under the leadership of Mr. Kowalski, who had requested Mr. Aldaco's views, then continued with its normal activities in the field.

Halo's only evidence of willfulness, the deposition testimony of Ms. Munson, fell far short of being "clear and convincing." In fact, it raised a credible invalidity defense that showed an absence of unreasonableness or bad faith by Pulse and precluded a finding of willfulness.

In addition, Pulse's invalidity defense had sufficient merit – at minimum – to present a triable issue. Standing alone, that precludes a finding of objective recklessness in this case. *See, e.g.*, *Spine Solutions*, 620 F.3d at 1319 (overturning a jury's finding of willfulness because the defendant "raised a substantial question as to the obviousness" of the asserted patent, which was ultimately found to be nonobvious); *DePuy Spine, Inc. v. Medtronic Sofamor Danek, Inc.*, 567 F.3d 1314, 1336-37 (Fed. Cir. 2009) (reasoning that a substantial defense to infringement may preclude a finding of willful infringement).

2. Halo's Letters to Pulse In 2002 Did Not Allege Infringement; Only with the Complaint In 2007 Did Halo Allege Infringement, Whereupon Pulse Raised Substantial Defenses That Precluded Willful Infringement.

As the district court held (App. 118a), and as Halo now admits (App. 7a), the letters that Halo sent to Pulse in 2002 did not allege patent infringement.

In evaluating Pulse's pre-suit conduct, the key factor is that Halo did not accuse Pulse of infringement until Halo filed its complaint. After being served, Pulse promptly raised substantial invalidity and noninfringement defenses that survived summary judgment and presented triable issues of fact. After considering the trial evidence, the district court judge found no willful infringement by Pulse. In light of that evidence and of Halo's failure to prove willfulness by clear and convincing evidence, the district court's grant of judgment as a matter of law of no willfulness was proper, as was the Federal Circuit's affirmance of that holding.

3. Under *Bard*, the District Court Judge, Not the Jury, Decides the Objective Prong of Willfulness; Here, the Judge's Finding of No Willful Infringement Was Properly Affirmed.

Bard made clear that the district court judge, not the jury, must decide the objective prong of a willful infringement analysis. 682 F.3d at 1007 ("[T]he

objective determination of recklessness, even though predicated on underlying mixed questions of law and fact, is best decided by the judge as a question of law subject to *de novo* review"). Whether a defense is reasonable is a legal issue for the district court, even when the jury decides underlying factual issues such as with obviousness. *Id.*

Here, the trial judge, after hearing all the testimony and reviewing all the other evidence, correctly decided that Halo had not met its burden of proving the threshold objective prong for willful infringement by clear and convincing evidence. As stated in *Bard*, "courts of appeals should 'be constantly alert' to 'the trial judge's first-hand knowledge of witnesses, testimony, and issues' [and] should give due consideration to the first-instance decisionmaker's 'feel' for the overall case." *Id.* at 1008 (citations omitted). Accordingly, the Federal Circuit correctly affirmed the district court's finding of no willful infringement.

Taken together, this demonstrates that Halo's petition on the questions involving Section 284 should be denied.

III. THIS IS NOT AN APPROPRIATE CASE FOR REEVALUATION OF THE TERRITORIAL REACH OF 35 U.S.C. § 271(a).

A. The Validity of the Underlying Patent Claims Is In Dispute.

As discussed above and detailed in Pulse's conditional cross-petition, Pulse presented a strong

challenge to the validity of each of the patent claims asserted by Halo. The Court should decline to consider the standard for assessing infringement under Section 271(a) in a case where the validity of the patents found to have been infringed is highly questionable.

B. The Operative Facts Are In Dispute.

This case has many disputed facts regarding the alleged infringing acts of Pulse. For example, Halo contends that Pulse utilized a requirements contract and made offers to sell in the U.S. However, Pulse maintains – and the district court and Federal Circuit held – that only negotiations took place in the U.S., no binding terms of sale were reached in the U.S., and no offers to sell or sales were made in the U.S. Thus, if the Court should take up the issue of direct infringement in this case, it would first have to make fact-specific findings regarding what conduct is domestic versus foreign, and then determine whether any domestic conduct is sufficient "to displace the presumption against extraterritorial application." *Kiobel v. Royal Dutch Petroleum Co.*, 133 S. Ct. 1659, 1669 (2013). That alone makes this case inappropriate for *certiorari*.

Halo cites to the Brief *Amici Curiae* for Ten Intellectual Property Professors in the *Transocean* case (No. 13-43) (*available at* http://bit.ly/1pYxI2V), which supported *certiorari* there and pointed to the district court's summary judgment decision in this

case as an example of why *Transocean* should be reversed. The professors reasoned that "even more perplexing, is that there is no infringement when the offer is in fact made within the United States to sell a device overseas." Br. *Amici Curiae* of Ten Intellectual Property Law Professors in *Transocean*, No. 13-43 at 14. However, their concern is unwarranted in this case, since they appear to misapprehend the district court's decision, which **did not** find that offers to sell by Pulse occurred in the U.S.

The *amici* brief incorrectly described the district court as "finding no infringement for domestic offers to sell the invention abroad." *Id.* However, the district court's opinion only referred to "pricing discussions . . . between Pulse and its customers in the United States," and did not determine that those discussions were offers to sell. (App. 129a.) The district court identified a dispute between the parties as to whether these "pricing discussions" constituted offers for sale, and the district court resolved it in favor of Pulse, finding no offers to sell in the U.S., stating:

> Halo does not provide any evidence disputing that the products were manufactured overseas or the amount of products shipped outside of North America. Rather, Halo argues that because some pricing discussions took place in the United States, Pulse "offered to sell" the accused products in the United States. It is well settled that liability under

> § 271(a) requires infringing activity within the United States.

(App. 129a.)

The district court correctly concluded that "some pricing discussions" did not amount to infringing offers to sell in the U.S. Only then did the district court proceed with its analysis under *Transocean*, stating "[f]urther, under *Transocean*, it is not the location of the offer to sell, but rather the location of the contemplated sale that determines whether an offer to sell is made in the United States." (App. 129a.) The district court then found that the ultimate sales of accused products did not take place in the U.S. As such, the district court determined that no infringing activity – whether by offers to sell or sales in the U.S. – was committed by Pulse. (App. 129a-130a.)

In view of the disputed facts regarding the alleged infringing acts of Pulse, this is not an appropriate case for the Court to reevaluate the standard for infringement under Section 271(a).

C. The Federal Circuit Properly Held That This Case Is Not Appropriate for Reevaluating Infringement Under Section 271(a).

The Federal Circuit correctly found that neither a sale nor an offer to sell had occurred in the U.S. that would result in liability under Section 271(a), stating:

On undisputed facts, the products under discussion here were manufactured, shipped, and delivered to buyers abroad. *Halo*, 810 F. Supp. 2d at 1207 ("All accused products [at issue] were at no point, in transit or otherwise, in the United States."). **In addition, Pulse received the actual purchase orders for those products abroad. Although Pulse and Cisco had a general business agreement, that agreement** did not refer to, and **was not a contract to sell, any specific product.** J.A. 15135-37. **While Pulse and Cisco engaged in quarterly pricing negotiations for specific products, the negotiated price and projected demand did not constitute a firm agreement to buy and sell, binding on both Cisco and Pulse. Instead, Pulse received purchase orders from Cisco's foreign contract manufacturers, which then firmly established the essential terms including price and quantity of binding contracts to buy and sell. Moreover, Pulse was paid abroad by those contract manufacturers,** not by Cisco, upon fulfillment of the purchase orders. Thus, substantial activities of the sales transactions at issue, in addition to manufacturing and delivery, occurred outside the United States. Although Halo did present evidence that pricing negotiations and certain contracting and marketing activities took place in the United States, which purportedly resulted in the purchase orders and sales overseas, as indicated, such pricing

> and contracting negotiations alone are insufficient to constitute a "sale" within the United States.
>
> * * *
>
> On these facts, we need not reach Halo's argument that the place where a contract for sale is legally formed can itself be determinative as to whether a sale has occurred in the United States because **we agree with the district court here that the pricing negotiations and contracting activities in the United States to which Halo points did not constitute the final formation of a definitive, binding contract for sale.**

(App. 15a (emphasis added).)

Moreover, the pricing discussions did not constitute a "requirements contract" because they were mere negotiations. There was no agreement as to any potential requirements, any particular products, or any specified price. As the Federal Circuit noted:

> As one of Cisco's component suppliers, Pulse executed a general agreement with Cisco that set forth manufacturing capacity, low price warranty, and lead time terms. J.A. 15135-37. However, that general agreement did not refer to any specific Pulse product or price. Cisco typically sent a request for quote to its component suppliers and Pulse responded with the proposed price and minimum quantity for each product as identified by its part number. After further negotiation,

> Cisco issued the agreed-upon price, projected demand, and percentage allocation to Pulse for each product for the upcoming quarter.

(App. 6a.)

Based on these facts and applicable case law, there could be no offer to sell or sale in the U.S. Accordingly, there was no direct infringement under Section 271(a). Further, the Federal Circuit correctly refused to expand the scope of Section 271(a) to find infringement for Pulse's foreign activities, which would have been an improper extraterritorial application of U.S. patent laws. (App. 15a-16a.) As such, Halo's petition should be denied on all issues involving the territorial reach of Section 271(a).

IV. THE FEDERAL CIRCUIT'S AFFIRMANCE OF THE GRANT OF PULSE'S MOTION FOR SUMMARY JUDGMENT UNDER 35 U.S.C. § 271(a) WAS CORRECT, AND FURTHER REVIEW IS UNNECESSARY.

The statute defining direct patent infringement, 35 U.S.C. § 271(a), states:

> (a) Except as otherwise provided in this title, whoever without authority makes, uses, offers to sell, or sells any patented invention, within the United States or imports into the United States any patented invention during the term of the patent therefor, infringes the patent.

In this case, Halo bases it claims of direct infringement (including sale and delivery of the Pulse products at issue) on activities that took place outside of the U.S. All of the activities complained of by Halo that occurred in the U.S. have to do with non-infringing products or activities, a fact that precludes a finding of direct infringement under Section 271(a).

Accordingly, the district court's grant of Pulse's Motion for Summary Judgment of No Liability for Sales Activity Outside of North America was fully supported by undisputed facts and by the law, and it was properly affirmed by the Federal Circuit.

A. Pulse's Limited Pricing Discussions In the United States Did Not Constitute Patent Infringement Because No Sales of Accused Products Occurred In the United States By Reason of Those Discussions.

The record clearly shows that the actions of Pulse now at issue took place primarily outside of the U.S. The vast majority of the accused products sold by Pulse – about 84% of those sold since March 15, 2001 – were manufactured, ordered, invoiced, shipped, and delivered **outside** of the U.S. (A43-51; A16023-38; A16039-69.) Since that date, **all** of the accused products have been manufactured in China. (A16071.) **All** purchase orders for accused products that were shipped outside of North America were received at Pulse's sales offices **outside** of North America since that time. (A16071-72.) **All** of the

accused products eventually shipped to Pulse's customers **outside** of North America were **never**, at any point, in transit or otherwise, in the U.S. (A16072.) These are the only products now at issue for Halo's claim of direct infringement.

Pulse sold relatively few of the accused products to Cisco and its subsidiaries. (A16101; A16109.) Pulse engaged in periodic pricing discussions with Cisco in the U.S. regarding the prices that Pulse would offer to Cisco's contract manufacturers for any of the accused products they might order. (A16089; A16091; A16107-108.) However, all those pricing discussions were **forecasts** and did not guarantee that Pulse would actually receive a single order from any manufacturer. (A16109-110.) For each manufacturer that actually placed an order with Pulse, **all** of the manufacture, invoicing, shipping, and delivery took place **outside** of the U.S. (A16074-76.) Halo did not rebut these facts or show that Pulse has shipped any ordered products into the U.S. (*See* A43-51.)

As a matter of law, products made outside the U.S. and shipped outside the U.S. cannot infringe under Section 271(a), which requires that infringing activity with respect to a patented invention take place "within the United States." As such, there is no reason for the Court to review the district court's limited grant of summary judgment of no direct infringement or the Federal Circuit's affirmance of that decision.

B. The District Court and Federal Circuit Properly Applied *Transocean* and Other Case Law In Granting Summary Judgment of No Direct Infringement "Within the United States."

Halo argues that the district court and the Federal Circuit misinterpreted the provisions of Section 271(a) and misapplied *Transocean* to grant and affirm summary judgment of no direct infringement. (Halo Petition at 24-31.)

In its strained interpretation of Section 271(a), Halo ignores decades of precedent limiting the extraterritorial application of U.S. patent law. Halo argues that any activity, however minimal, that occurs in the U.S. is sufficient to meet the "within the United States" language of Section 271(a) and thereby render any related activity to be an act of infringement. For example, at oral argument before the Federal Circuit, Halo's counsel acknowledged that Halo was interpreting Section 271(a) in a "very broad" manner:

> Judge Hughes: I mean, my baseline was that we disagree with you that a sale actually occurred here. It seems to me that, that's what I'm trying to get at is, what your definition of "offer for sale" is, and it seems like it's a very broad one.
>
> Mr. Woodford: **Right. Our position is very broad, that is true.**

Federal Circuit Oral Argument Recording (Aug. 4, 2014), No. 2013-1472, at 12:30-45 (*available at* http://oralarguments.cafc.uscourts.gov/default.aspx?fl=2013-1472.mp3).

Halo's proposed expansion of Section 271(a) violates several basic principles. First, Halo's proposal should be addressed to Congress, because it would require an amendment to a federal statute. Second, there is a presumption against such extraterritorial application. "It is a longstanding principle of American law that legislation of Congress, unless a contrary intent appears, is meant to apply only within the territorial jurisdiction of the United States." *Morrison v. Nat'l Australia Bank Ltd.*, 130 S. Ct. 2869, 2877 (2010) (quotation marks and citations omitted). "When a statute gives no clear indication of an extraterritorial application, it has none." *Id.* at 2878. This presumption applies "in all cases." *Id.* at 2881. As the Court has emphasized, absent a clear indication from Congress, U.S. law does not govern conduct within another country's territory. *E.g.*, *Kiobel*, 133 S. Ct. at 1664; *Morrison*, 130 S. Ct. at 2878. The presumption against extraterritorial application applies with "particular force in patent law." *Microsoft*, 550 U.S. at 454-55.

In this case, Pulse, an American company with operations in the U.S., conducted activities in the U.S. related to its business of providing products to its customers. However, those domestic activities do not constitute infringing activities under Section 271(a). *See Morrison*, 130 S. Ct. at 2884 ("But the

presumption against extraterritorial application would be a craven watchdog indeed if it retreated to its kennel whenever *some* domestic activity is involved in the case.").

This Court has long held that U.S. patent law does not operate extraterritorially to prohibit infringement abroad. *See Microsoft*, 550 U.S. at 441 ("It is the general rule under United States patent law that no infringement occurs when a patented product is made and sold in another country."); *Deepsouth Packing Co., Inc. v. Laitram Corp.*, 406 U.S. 518, 531 (1972) ("[o]ur patent system makes no claim to extraterritorial effect"), *superseded in part by statute*, Patent Law Amendments Act of 1984, Pub. L. No. 98-622, 98 Stat. 3383; *Dowagiac Mfg. Co. v. Minnesota Moline Plow Co.*, 235 U.S. 641, 650 (1915) ("The right conferred by a patent under our law is confined to the United States and its Territories . . . and infringement of this right cannot be predicated of acts wholly done in a foreign country."). As this Court reasoned more than 150 years ago, in *Brown v. Duchesne*, 60 U.S. (19 How.) 183, 195-96 (1856):

> [T]hese acts of Congress do not, and were not intended to, operate beyond the limits of the United States; and as the patentee's right of property and exclusive use is derived from them, they cannot extend beyond the limits to which the law itself is confined. And the use of it outside of the jurisdiction of the United States is not an infringement of his rights, and he has no claim to any

> compensation for the profit or advantage the party may derive from it.

Similarly, the Federal Circuit has noted, "It is well-established that the reach of section 271(a) is limited to infringing activities that occur within the United States." *MEMC Elec. Materials, Inc. v. Mitsubishi Materials Silicon Corp.*, 420 F.3d 1369, 1375 (Fed. Cir. 2005).

On that point, Halo's citation to *amici* briefs in support of *certiorari* in the *Transocean* case is notable. Virtually all the briefs underscored the need to respect the national boundaries of U.S. patent law and to avoid any unwarranted extraterritorial application. Here, Halo's argument for a finding of infringement under Section 271(a) for Pulse's foreign manufacturing and sales is precisely the type of unjustified extraterritorial application of U.S. patent law that those *amici* briefs opposed.

If Halo is arguing that there is ambiguity in § 271(a), any such ambiguity should be construed against extraterritorial application of U.S. patent laws. "When a statute gives no clear indication of an extraterritorial application, it has none." *Morrison*, 130 S. Ct. at 2878. Viewing the statute objectively, Congress clearly indicated that Section 271(a) does not apply to foreign activities; rather, it only applies when a person "makes, uses, offers to sell, or sells" a patented invention "within the United States," or imports it "into the United States." *See also* 35 U.S.C.

§ 154(a)(1) (stating that U.S. patents only apply "throughout the United States").

The Federal Circuit reasonably and correctly interpreted "any patent invention, within the United States" as modifying the words "to sell" in the phrase "offers to sell" because the words "any patented invention, within the United States" actually follow "to sell," not "offers." 35 U.S.C. § 271(a). If Congress had intended for the phrase "within the United States" to modify "offers," Congress could have drafted Section 271(a) accordingly, such as by using the language "offers within the United States to sell any patent invention."

Halo's theory of direct infringement based on alleged "offers to sell" is also flawed for another reason. Halo produced no evidence to show that any of the purported offers to sell that occurred in the U.S. were for products that would, if sold, infringe the patents at issue. An infringing "offer to sell" must be for the contemplated sale of an infringing product. *See Rotec Indus., Inc. v. Mitsubishi Corp.*, 215 F.3d 1246, 1260 (Fed. Cir. 2000) (Newman, J., concurring), stating:

> It is clear, however, that an infringing offer to sell, § 271(a), must be of an item that would infringe the United States patent upon the intended sale, § 271(i). Thus an offer made in the United States, to sell a system all of whose components would be made in foreign countries, for sale, installation, and

> use in a foreign country, does not infringe the United States patent.

Further, Halo has no basis to allege direct infringement for products that were *not* shipped into the U.S. even after a purported (and unproven) offer for sale made by Pulse in the U.S.

As the district court correctly held in its summary judgment order:

> Although Halo has provided evidence indicating that pricing discussions took place between Pulse and its customers in the United States, **Pulse has provided evidence that the majority of its accused products were manufactured and shipped outside of the United States. Halo does not provide sufficient evidence that Pulse shipped these products into the United States.** Accordingly, there is not a genuine issue of material fact that for these products, Pulse did not directly infringe the Halo patents. **Therefore, Pulse is not liable for direct infringement based on its sales of accused products outside of the United States.**

(App. A29-31 (emphasis added).)

On appeal to the Federal Circuit, Halo presented *no evidence* that would establish that Pulse offered to sell or sold those products in the U.S. or shipped them into the U.S. Because Halo embraced a theory of direct infringement that was not supported by statute or by case law, and because it failed to show

that Pulse offered to sell, sold, or shipped the accused products into the U.S., the Federal Circuit affirmed the district court's grant of summary judgment of no direct infringement "within the United States." As such, there is no reason for the Court to review that ruling.

CONCLUSION

For the foregoing reasons, Halo's petition for a writ of *certiorari* should be denied.

Respectfully submitted,

MARK L. HOGGE
Counsel of Record
DENTONS US LLP
1301 K Street, NW,
East Tower, Suite 600
Washington, DC 20005
Telephone: (202) 408-6400
mark.hogge@dentons.com

SHAILENDRA K. MAHESHWARI
CHARLES R. BRUTON
RAJESH C. NORONHA
DENTONS US LLP
1301 K Street, NW,
East Tower, Suite 600
Washington, DC 20005
Telephone: (202) 408-6400

Counsel for Respondents

Supreme Court, U.S.
FILED
SEP - 3 2015
OFFICE OF THE CLERK

No. 14-1513

In the Supreme Court of the United States

HALO ELECTRONICS, INC.,

Petitioner,

v.

PULSE ELECTRONICS, INC.,
PULSE ELECTRONICS CORPORATION,

Respondents.

On Petition for a Writ of Certiorari to the United States Court of Appeals for the Federal Circuit

REPLY BRIEF IN SUPPORT OF CERTIORARI

CRAIG E. COUNTRYMAN
Counsel of Record
Fish & Richardson P.C.
12390 El Camino Real
San Diego, CA 92130
(858) 678-5070
countryman@fr.com

MICHAEL J. KANE
WILLIAM R. WOODFORD
JOHN A. DRAGSETH
Fish & Richardson P.C.
3200 RBC Plaza
60 South Sixth Street
Minneapolis, MN 55402
(612) 335-5070

Counsel for Petitioner

TABLE OF CONTENTS

Page

INTRODUCTION 1

ARGUMENT 2

I. The Federal Circuit's Section 284 Jurisprudence Warrants Review 2

A. *Seagate* Conflicts with the Statute, Its Purpose, and This Court's Precedent. 2

B. This Case Is an Excellent Vehicle 5

1. Halo Did Not Waive Its Challenge to *Seagate* 5

2. Changed Law Would Impact This Case Because the Facts Support Enhancement 7

II. The Federal Circuit's § 271(a) Jurisprudence Warrants Review 8

A. The Federal Circuit Misinterpreted the "Sells" and "Offers to Sell" Provisions. 8

B. This Case Is an Excellent Vehicle 11

CONCLUSION 12

INTRODUCTION

Halo's petition presents two legal issues where the Federal Circuit's rules conflict with the statutory text and this Court's precedent. Pulse says little of substance on the law, and its portrayal of the facts as "disputed" is wrong given the procedural posture.

For § 284, the statutory text does not limit enhancement to cases of willful infringement, and this Court's precedent says that enhancement to compensate the plaintiff is permissible independent of willfulness. Moreover, this Court has equated willfulness with subjective bad faith and never required a threshold "objective" showing divorced from the defendant's actual conduct. The Federal Circuit's error is the same as in *Octane*—imposing a rigid artifice on a flexible statutory text. Halo did not waive any argument because it raised this error immediately after *Octane*, yet the Federal Circuit refused to correct it. Moreover, Pulse knew it was infringing from day one because it copied Halo's patents, and validity is firmly established, as explained in Halo's response to Pulse's cross-petition.

For § 271(a), the Federal Circuit's interpretation of the phrase "offers to sell, or sells ... within the United States" conflicts with the statutory text and commercial usage. Pulse does not try to defend the Federal Circuit's erroneous ruling that a requirements contract is not a binding sale. Pulse tries instead to re-spin the facts, which is impermissible because the issue was decided against Halo on summary judgment, so Halo's evidence must be accepted. The presumption against extraterritoriality is inapplicable because Halo seeks to hold Pulse accountable for U.S. conduct—offers and sales contracts with Cisco in California.

ARGUMENT

I. The Federal Circuit's Section 284 Jurisprudence Warrants Review.

A. *Seagate* Conflicts with the Statute, Its Purpose, and This Court's Precedent.

1. The proper interpretation of § 284 begins and ends with its text: "the court may increase the damages up to three times the amount found or assessed." Pulse doesn't identify anything in this text that makes "willful infringement" a prerequisite to enhancement, much less that mandates the Federal Circuit's objective/subjective *Seagate* test—both fatal to Pulse's position.

Octane Fitness, LLC v. Icon Health & Fitness, Inc., 134 S.Ct. 1749 (2014), instructs that a flexible statute, with language more restrictive than § 284, cannot be administered with a rigid test. Pulse is right that *Octane* did not specifically mention § 284. But *Octane*'s methodology—sticking with the statute and rejecting a rigid objective/subjective artifice—applies equally to § 284. Pulse offers no plausible reason why *Octane*'s directive shouldn't apply here, and neither did any Federal Circuit judge. Although Pulse cites (at 15-16) briefing that distinguished §§ 284 and 285, *Octane* itself drew no such distinction. The one difference between the statutes—that § 285 refers to "exceptional cases," while § 284 does not—suggests that § 284 is even *more* flexible, and that *Octane*'s approach applies with even *greater* force here. Pulse ignores this point.

This Court's other precedent confirms that *Seagate* is wrong. Halo's petition collects (at 15-16) this Court's decisions that permit enhancement for multiple reasons, only one of which is willfulness.

Pulse erroneously characterizes those cases as holding there can be no enhancement "unless" there is willfulness. But Pulse ignores Judge Gajarsa's analysis, which demonstrated that the cases "do not hold that a finding of willfulness is *necessary* to support an award of enhanced damages," but "stand for the uncontroversial proposition that a finding of willfulness is *sufficient* to support an award of enhanced damages." *In re Seagate Tech., LLC*, 497 F.3d 1360, 1381 (Fed. Cir. 2007) (Gajarsa, J., concurring).

This Court's "long history" of interpreting § 284 and its predecessors makes this case more appropriate for review, not less. That 160 years of this Court's precedent proscribes a flexible standard makes the Federal Circuit's rigid, two-prong test less justifiable for § 284 than it was for § 285.

2. Section 284's purpose further shows *Seagate* is wrong. Contrary to Pulse's suggestion (at 14), § 284 is both compensatory *and* punitive. It compensates a plaintiff when the defendant's conduct causes added expense. *Teese v. Huntingdon*, 64 U.S. 2, 9 (1860) ("[I]f, in the opinion of the court, the defendant has not acted in good faith, *or has caused unnecessary expense and injury to the plaintiff*, the court may render judgment for a larger sum, not exceeding three times the amount of the verdict."); *Clark v. Wooster*, 119 U.S. 322, 326 (1886) (same); *Seagate*, 497 F.3d at 1378-81 (Gajarsa, J., concurring) (collecting authority that § 284 can be compensatory); Nokia Br. at 9-10. And it punishes and deters bad faith behavior. *Tilghman v. Proctor*, 125 U.S. 136, 143-44 (1888) ("[T]he court may, whenever the circumstances of the case appear to require it, *inflict vindictive or punitive damages*, by rendering judgment for not more than thrice the amount of the verdict.").

Section 284's compensatory purpose shows *Seagate* was wrong to limit enhancement to cases of willful infringement. The defendant should be liable for all actual harm it inflicts. Section 284's text ensures the court can enhance damages if the jury's award does not reflect that full harm. Ensuring adequate compensation is independent of willfulness—that's why *Teese* posited them as alternatives.

Section 284's deterrent purpose shows that *Seagate* was wrong to impose an "objective" inquiry divorced from a defendant's conduct. The analysis should turn on the defendant's actual beliefs and conduct when it decided to infringe. That is the time when we want to deter bad conduct. This Court's cases reflect this view—they refer to a defendant that "has not acted in good faith." *Teese*, 64 U.S. at 9. So does the legislative history—it says that enhancement targets someone "thinking" he can infringe without penalty. *See* S. Rep. No. 79-1503, at 2 (1946) ("[T]he present discretion to award triple damages, will discourage infringement of a patent by anyone thinking that all he would be required to pay if he loses the suit would be a royalty."). But the Federal Circuit requires district courts to ignore a defendant's actual pre-suit conduct if the defendant develops a non-sham defense post-suit. *Carnegie Mellon Univ. v. Marvell Tech. Gp.*, __ F.3d __, 2015 WL 4639309, at *12 (Fed. Cir. Aug. 4, 2015) (citing *Halo* for the proposition that *Seagate's* objective prong "is not met when the infringer, whatever its state of mind at the time of its infringement, presents in the litigation a defense, including an invalidity defense, that is objectively reasonable (though ultimately rejected)"). That thwarts the statutory goal of incentivizing guilty defendants to license or design around the patent *before* the patentee must file suit.

Pulse wrongly defends *Seagate* (at 18-19) by saying the case imported the objective/subjective test from *Safeco Ins. Co. v. Burr*, 551 U.S. 47 (2007). But *Safeco* addressed the Fair Credit Reporting Act and cautioned that "'willfully' is a 'word of many meanings whose construction is often dependent on the context in which it appears.'" *Id.* at 57. So it is wrong to blindly import *Safeco* into § 284, which has a different text and precedent, for the same reasons *Octane* held it wrong to import an antitrust standard into § 285. Moreover, bad faith conduct is *always* willful. Although *Safeco*'s discussion of the two-prong test for "objective recklessness" identifies one category of "willful" misconduct, it doesn't change the fact that bad faith actors are equally "willful." *Safeco*, 551 U.S. at 59 (explaining the statute covers "both knowing and reckless disregard of the law" and that "knowing violations are sensibly understood as a more serious subcategory of willful ones"). Anyway, the Federal Circuit is misinterpreting *Safeco*, because *Safeco* analyzed the "objective" prong based on what the defendant actually relied upon at the time, while the Federal Circuit does not. *See* Independent Inventor Groups Br. at 10-11.

B. This Case Is an Excellent Vehicle.

Pulse doesn't dispute the issues here are important, and its arguments (at 5-13) that this case is a bad vehicle are meritless.

1. Halo Did Not Waive Its Challenge to *Seagate*.

Halo did not waive its challenge to *Seagate* as an inappropriate approach to § 284. This Court decided *Octane* after the parties' Federal Circuit briefs were

submitted. Halo thus raised the issue at the first opportunity—oral argument—and told the panel that *Octane* undermined the existing framework for enhancing damages. *See* http://1.usa.gov/1ho3EAz at 27:25-28:34. Pulse did not treat the issue as waived then, and volunteered that "I don't have a problem reexamining" *Seagate* in light of *Octane*. *Id.* at 19:11-18. The issue was thus squarely presented to the panel, and a concurrence thoughtfully addressed it. (App. 25a-31a.) Halo's ensuing *en banc* petition argued (at 11-12) that *Seagate*'s "rigid, *per se* approach is inconsistent with the text and purpose of § 284," and that "intervening Supreme Court precedent strongly counsels against a rigid rule like the one the panel was forced to apply." Two judges dissented from the denial of rehearing, for many of the reasons Halo raises here. (App. 146a-154a.) So the issue was well-vetted below.

Pulse's formalistic waiver arguments conflict with this Court's precedent. Halo has sought enhanced damages—the underlying issue here—since the complaint. (A294-95.) It doesn't matter that Halo's submissions to the district court and briefs to the panel focused on the then-governing legal rule (*Seagate*) and didn't ask for relief (overruling *Seagate*) that neither could provide. *MedImmune, Inc. v. Genentech*, 549 U.S. 118, 125 (2007). Moreover, Halo has properly refined its arguments here to include additional support for the same point argued below—*Seagate* conflicts with the text of § 284. *Nelson v. Adams USC, Inc.*, 529 U.S. 460, 469 (2000).

The Federal Circuit has previously considered all the arguments Halo makes here. *Seagate* rejected two judges' plea to not engraft a willfulness requirement onto § 284. Moreover, the *en banc* court here rejected two judges' attempt to eliminate the rigid, two-prong

test for willfulness. So the Federal Circuit is not simply waiting for another case to more clearly present these issues; its mind is already made up.

2. Changed Law Would Impact This Case Because the Facts Support Enhancement.

Halo's petition shows (at 4-6), with supporting citations, that this case is a quintessential candidate for enhancement. Pulse saw Halo's patents in 1998, immediately copied Halo's patented design, spurned Halo's attempts to discuss a license, conducted a "cursory" investigation in 2002 (years after infringement began), never made a "conscious decision" that the patent was invalid, and concocted a post-suit obviousness defense that contradicted Pulse's own prior publications teaching away from the invention.

Pulse says (at 6-7) these facts are "disputed." But the only fact-finder who considered them—the jury—found that Pulse acted in bad faith and copied. (A210, A233.) Pulse's quote from the jury instruction (at 11) shows exactly what the jury found when it deemed Pulse a willful infringer after considering "all of the facts." (*Id.*) The courts below found no willfulness only by ignoring Pulse's actual conduct and focusing on what a hypothetical company might have thought. (App. 64a-65a, 21a-22a.) That aside, any true "disputes" can be resolved on remand after this Court announces the right legal standard.

Pulse is wrong to suggest (at 17) that changed law wouldn't help Halo. The district court was not permitted to apply the correct substantive standard for enhancement under § 284. So even if the right standard of appellate review becomes abuse of discretion, the district court must first exercise discretion using the

substantive law before any appellate court could assess whether it had been abused. Under the right standard, the court could certainly conclude, like the jury, that Pulse acted in bad faith, or that enhancement is warranted for another reason.

In fact, this case's procedural posture makes it the perfect candidate for fixing the enhancement standard—the jury found Pulse willful but the district court couldn't properly assess whether to enhance because it was constrained by *Seagate*. If this Court is also interested in reevaluating the appellate standard of review, the co-pending certiorari petition in *Stryker* would be a good companion (just as *Highmark* was a companion for *Octane*), because a more deferential standard could result in the enhancement there being affirmed, even if *Seagate* were retained.

II. The Federal Circuit's § 271(a) Jurisprudence Warrants Review.

A. The Federal Circuit Misinterpreted the "Sells" and "Offers to Sell" Provisions.

Pulse largely ignores the legal arguments in Halo's petition, instead presenting its own spin on the facts. But these issues were resolved against Halo on summary judgment, so this Court doesn't need to make any "fact-specific findings," as Pulse argues (at 27). The Court must accept Halo's evidence as true. That evidence shows that Pulse both makes commercial offers to Cisco, and enters requirements contracts with Cisco that set a binding price and quantity. (*See* Petition at 7-8.) The Federal Circuit legally erred by holding these are not infringing U.S. sales and offers under § 271(a).

1. With respect to whether Pulse "sells ... within the United States" to Cisco, Pulse doesn't dispute that

a requirements contract is a sale. Nor could Pulse—"the substance of the sale is the agreement to sell, and its acceptance," *Norfolk & W. Ry. Co. v. Sims*, 191 U.S. 441, 447 (1903), and Halo's petition (at 24-26) shows that requirements contracts are binding agreements.

Instead, Pulse's main argument (at 31) is that its discussions with Cisco are "mere negotiations" and non-binding "forecasts." But Pulse ignores the contrary evidence that must be taken as true, including:

- Pulse's President testifying that "[w]hen we submit that price, we're agreeing, if Cisco orders that number of parts, we will give them that price," (A15443-44);
- Pulse's customer support materials instructing employees dealing with Cisco's manufacturers to "ALWAYS USE CISCO CONTRACT PRICING," (A15463);
- An email from Pulse's North American Sales Director to Cisco assuring them that Pulse "take[s] Cisco pricing as gospel," (A15825);
- An email from Cisco to Pulse stating that a "price higher than the price between Cisco (me) and Pulse (you), Cisco will not honour," (A15449);
- Cisco instructs its manufacturers to obtain Pulse products based on the agreed price and allocation and rebukes them if they don't. (A15053-56, A15063-64; A15130-34, A15449.)

Pulse and Cisco make their requirements contract in the U.S.—both are in California, and a master agreement adding further terms is governed by California law. (A15135, A15056-57.) Therefore, a jury could

conclude that Pulse and Cisco have a U.S. requirements contract. Pulse's block quotes from the lower court opinions don't help its cause—those opinions ignored this evidence because of their legal error in thinking that a requirements contract cannot be a sale under § 271(a). This Court should reject the Federal Circuit's patent-law specific rule as to what types of contracts satisfy the statute.

Pulse wrongly invokes the presumption against extraterritoriality, but, as Halo's petition explained (at 28-29), the presumption doesn't apply here. Halo is focused on Pulse's U.S. conduct—negotiating and contracting in the U.S. That Pulse's other activities (manufacturing, invoicing, delivering) occur outside the U.S., doesn't change the fact that the "substance of the sale," *i.e.*, the agreement, occurs within the U.S. *Norfolk*, 191 U.S. at 447.

2. Pulse is also liable because it "offers to sell ... within the United States" the patented invention. Again, Pulse is largely silent on Halo's legal arguments, and mainly argues (at 29) that it does not make offers to Cisco. But Pulse's President testified that Pulse communicates binding offers to Cisco, saying that "[w]hen we submit that price, we're agreeing, if Cisco orders that number of parts, we will give them that price." (A15443-44.) That's an offer. The Law Professors' *amicus* brief in *Transocean* thus had the facts here exactly right, and they drew the right conclusion—it is "perplexing" there would be no liability "when the offer is in fact made within the United States." The district court didn't mention those facts because it was operating under the wrong legal standard.

Pulse's reliance (at 39) on Judge Newman's concurrence in *Rotec Indus., Inc. v. Mitsubishi Corp.*, 215

F.3d 1246 (Fed. Cir. 2000), is misplaced. Judge Newman observed that § 271(i) restricts infringing "offers to sell" to offers for which the underlying sale occurs within the patent term and thought that, by analogy, the underlying sale must also be in the U.S. But § 271(i) says nothing about the location question. If anything, § 271(i) supports Halo's position because it shows that when Congress wanted to limit the scope of "offers to sell," it did so expressly. Therefore, the phrase "offers to sell ... within the United States" should have its regular grammatical meaning—that there is infringement if the *offer* occurs within the United States, as it did here.

Pulse criticizes Halo (at 35) for saying its position is "broad." But the statute's breadth is a deliberate Congressional choice: the "offers to sell" provision was added in 1994 to reach conduct that hadn't previously been covered and to prevent "generating interest" in the patented invention in the U.S., which is precisely what Pulse's offers to Cisco do. *3D Sys., Inc. v. Aarotech Labs., Inc.*, 160 F.3d 1373, 1379 (Fed. Cir. 1998).

B. This Case Is an Excellent Vehicle.

Halo's petition (at 31-34) demonstrates that the § 271(a) issue is important, this Court has previously expressed interest in it, and a group of law professors described this case as the "perplexing" result of *Transocean*. Pulse argues (at 38) that the main concern with *Transocean* was that U.S. patent law would reach foreign conduct. But that underscores why the Federal Circuit's jurisprudence needs review. The Federal Circuit is getting it wrong in both ways—*Transocean* had the Federal Circuit finding liability for offers and agreements that occur wholly abroad,

while this case has the Federal Circuit finding no liability for offers and agreements occurring wholly in the U.S. This Court thus needs to step in, eliminate the Federal Circuit's patent-specific view of what constitutes an "offer" and a "sale," and ensure the statute covers U.S. conduct but not foreign conduct.

CONCLUSION

As explained above, *certiorari* should be granted.

Respectfully submitted,

CRAIG E. COUNTRYMAN
Counsel of Record
Fish & Richardson P.C.
12390 El Camino Real
San Diego, CA 92130
(858) 678-5070
countryman@fr.com

MICHAEL J. KANE
WILLIAM R. WOODFORD
JOHN A. DRAGSETH
Fish & Richardson P.C.
3200 RBC Plaza
60 South Sixth Street
Minneapolis, MN 55402
(612) 335-5070

Attorneys for Petitioner
Halo Electronics, Inc.

September 3, 2015

No. 14-1513

In The Supreme Court of the United States

HALO ELECTRONICS, INC.,

Petitioner,

v.

PULSE ELECTRONICS, INC.,
PULSE ELECTRONICS CORPORATION,

Respondents.

On Writ Of Certiorari To The United States Court Of Appeals For The Federal Circuit

JOINT APPENDIX VOLUME I

Counsel for Petitioner

CRAIG E. COUNTRYMAN
Counsel of Record
FISH & RICHARDSON P.C.
12390 El Camino Real
San Diego, CA 92130
(858) 678-5070
countryman@fr.com

Counsel for Respondents

MARK L. HOGGE
Counsel of Record
DENTONS US LLP
1301 K Street, NW,
Suite 600
Washington, D.C. 20005
(202) 408-6400
mark.hogge@dentons.com

[Additional Counsel Listed On Inside Cover]

Petition For Certiorari Filed June 22, 2015
Certiorari Granted October 19, 2015

COCKLE LEGAL BRIEFS (800) 225-6964
WWW.COCKLELEGALBRIEFS.COM

Additional Counsel
for Petitioner

MICHAEL J. KANE
WILLIAM R. WOODFORD
JOHN A. DRAGSETH
FISH & RICHARDSON P.C.
3200 RBC Plaza
60 South Sixth Street
Minneapolis, MN 55402
(612) 335-5070

Additional Counsel
for Respondents

SHAILENDRA K. MAHESHWARI
CHARLES R. BRUTON
RAJESH C. NORONHA
DENTONS US LLP
1301 K Street, NW,
Suite 600
Washington, D.C. 20005
(202) 408-6400

TABLE OF CONTENTS

Page

VOLUME I

Relevant Docket Entries for the United States District Court, District of Nevada (Las Vegas), 2:07cv331 1

Relevant Docket Entries for the United States Court of Appeals for the Federal Circuit, 13-1472 9

First Amended Complaint for Patent Infringement, filed on July 27, 2007 (Doc. No. 51) 11

Excerpts of Trial Transcript, Day 2, held on November 7, 2012 (Doc. No. 435) 20

Excerpts of Trial Transcript, Day 3, held on November 8, 2012 (Doc. No. 440) 43

Excerpts of Trial Transcript, Day 4, held on November 9, 2012 (Doc. No. 442) 54

Excerpts of Trial Transcript, Day 5, held on November 13, 2012 (Doc. No. 464) 58

Excerpts of Trial Transcript, Day 6, held on November 14, 2012 (Doc. No. 465) 61

Excerpt of Halo's Proposed Jury Instructions, filed on November 16, 2012 (Doc. No. 452) 140

Excerpts of Trial Transcript, Day 8, held on November 16, 2012 (Doc. No. 467) 142

Excerpts of Trial Transcript, Day 9, held on November 19, 2012 (Doc. No. 468) 161

Final Jury Instruction on Willfulness, filed on November 20, 2012 (Doc. No. 470 at 18) 174

TABLE OF CONTENTS – Continued

Page

Excerpt of Trial Transcript, Day 10, held on November 20, 2012 (Doc. No. 479) 176

Verdict, filed on November 26, 2012 (Doc. No. 482) 179

VOLUME II

(Exhibits arranged according to exhibit number)

Plaintiff's Exhibit PTX-91, July 9, 2015 Letter from Halo to Pulse re Potential License to Halo Patents, admitted into evidence on November 7, 2012 195

Plaintiff's Exhibit PTX-92, August 6, 2015 Letter from Halo to Pulse re Potential License to Halo Patents, admitted into evidence on November 7, 2012 197

Plaintiff's Exhibit PTX-123, Toolmaker Drawing of Halo's Surface Mount Transformer, admitted into evidence on November 13, 2012 199

Defendants' Exhibit DTX-512, Drawing of Pulse's Surface Mount Technology from 1991, admitted into evidence on November 14, 2012 201

Defendants' Exhibit DTX-526, Drawing of Pulse Part PE-64309 from 1986, admitted into evidence on November 14, 2012.....202

TABLE OF CONTENTS – Continued

Page

Defendants' Exhibit DTX-533 (A7955-56.4), Excerpt from "Electronic Packaging and Interconnection Handbook" 206

Defendants' Exhibit DTX-539, Toolmaker Drawing of Halo's Surface Mount Transformer, admitted into evidence on November 13, 2012 211

Defendants' Exhibit DTX-559, Drawing of Valor Part from 1989, admitted into evidence on November 7, 2012 213

Defendants' Exhibit DTX-563, Drawing of Pulse Part ST7047 from 1993, admitted into evidence on November 15, 2012 218

Defendants' Exhibit DTX-580, Drawing of Pulse Part PE060589 from 1980, admitted into evidence on November 14, 2012 226

Defendants' Exhibit DTX-605 (A8622-23.5), Excerpt from "Handbook of Surface Mount Technology", admitted into evidence on November 15, 2012 236

Defendants' Exhibit DTX-626, Japanese Unexamined Utility Model Application Publication H5-55513, admitted into evidence on November 15, 2012 241

Defendants' Exhibit DTX-644, Drawing of Pulse Part PE-65793, admitted into evidence on November 14, 2012 256

TABLE OF CONTENTS – Continued

Page

The following opinions and orders have been omitted in printing this Joint Appendix because they appear on the following pages in the appendix to the Petition for a Writ of Certiorari:

District Court Summary Judgment Order on § 271(a) and Other Issues, filed on September 6, 2011 ..... 67a

District Court Post-Trial Opinion on Willfulness and Other Issues, filed on May 28, 2013 ..... 32a

Federal Circuit Panel Opinion, filed on October 22, 2014 ..... 1a

Federal Circuit Denial of Rehearing En Banc, filed on March 23, 2015 ..... 137a

UNITED STATES DISTRICT COURT,
DISTRICT OF NEVADA
(LAS VEGAS)

2:07cv331

Halo Electronics, Inc. v. Bel Fuse Inc. et al

Date Filed:	**03/15/2007**
Assigned To:	**Judge Andrew P. Gordon**
Referred To	**Magistrate Judge Peggy A. Leen**
Nature of suit:	**Patent (830)**
Cause:	**Patent Infringement**
Lead Docket:	**None**
Other Docket:	**U.S. Court of Appeals for the Federal Circuit, 13-01472** **U.S. Court of Appeals for the Federal Circuit, 13-01656**
Jurisdiction:	**Federal Question**
Class Code:	**Closed**
Closed:	**05/28/2013**
Statute:	**15:1126**
Jury Demand:	**Both**
Demand Amount:	**$0**
NOS Description:	**Patent**

No	Date	Proceeding Text
1	03/15/2007	COMPLAINT FOR PATENT INFRINGEMENT against all defendants (Filing fee $ 350 receipt number 511051), filed by HALO ELECTRONICS, INC.. Certificate of Interested Parties due by 3/25/2007. (Attachments: # 1 Civil Cover Sheet # 2 Summons to Bel

		Fuse# 3 Summons to Pulse# 4 Summons to Technitrol)(Harmon, Joshua) (Entered: 3/15/2007)
51	07/27/2007	AMENDED COMPLAINT (FIRST) Including Proof of Service with Jury Demand against all defendants, filed by Halo Electronics, Inc.. No changes to parties. Proof of service due by 11/24/2007. (Attachments: # 1 Exhibit A# 2 Exhibit B# 3 Exhibit C# 4 Exhibit D# 5 Exhibit E# 6 Exhibit F)(Woodford, William) (Entered: 07/27/2007)
435	11/08/2012	TRANSCRIPT of Proceedings, 429 Jury Trial DAY 2, held on Wednesday, November 7, 2012, before Judge Philip M. Pro. Court Reporter/ Transcriber: Exceptional Reporting Services, Inc., 361-949-2988. Transcript may be viewed at the court public terminal or purchased through the Court Reporter/Transcriber using the court's "Transcript Order" form available on our website www.nvd.uscourts.gov before the deadline for Release of Transcript Restriction. After that date it may be obtained through PACER Redaction Request due 11/29/2012. Redacted Transcript Deadline set for 12/9/2012. Release of Transcript Restriction set for 2/6/2013. (JPQ) (Entered: 11/08/2012)

440	11/13/2012	TRANSCRIPT of Proceedings, 438 JURY TRIAL DAY 3 held on 11/8/2012, before Judge Philip M. Pro. Court Reporter/Transcriber; Exceptional Reporting Services, Inc., 361-949-2988. Transcript may be viewed at the court public terminal or purchased through the Court Reporter/Transcriber using the court's "Transcript Order" form available on our website www.nvd.uscourts.gov before the deadline for Release of Transcript Restriction. After that date it may be obtained through PACER Redaction Request due 12/4/2012. Redacted Transcript Deadline set for 12/14/2012. Release of Transcript Restriction set for 2/11/2013. (ABB) (Entered: 11/13/2012)
442	11/14/2012	TRANSCRIPT of Proceedings, 441 JURY TRIAL – DAY 4 held on 11/9/2012, before Judge Philip M. Pro. Court Reporter/Transcriber: Exceptional Reporting Services, Inc., 361-949-2988. Transcript may be viewed at the court public terminal or purchased through the Court Reporter/Transcriber using the court's "Transcript Order" form available on our website www.nvd.uscourts.gov before the deadline for Release of Transcript Restriction. After that date it may be obtained through PACER Redaction Request

		due 12/5/2012. Redacted Transcript Deadline set for 12/15/2012. Release of Transcript Restriction set for 2/12/2013. (ABB) (Entered: 11/14/2012)
452	11/16/2012	PROPOSED Jury Instructions by Plaintiff Halo Electronics, Inc. Suggestions on the Court's Draft No. 1. (Countryman, Craig) (Entered 11/16/2012)
470	11/20/2012	JURY INSTRUCTIONS.(AC) (Entered: 11/21/2012)
464	11/21/2012	TRANSCRIPT of Proceedings, 443 JURY TRIAL – DAY 5 held on 11/13/2012, before Judge Philip M. Pro. Court Reporter/Transcriber: Exceptional Reporting Services, Inc., 361-949-2988. Transcript may be viewed at the court public terminal or purchased through the Court Reporter/Transcriber using the court's "Transcript Order" form available on our website www.nvd.uscourts.gov before the deadline for Release of Transcript Restriction. After that date it may be obtained through PACER Redaction Request due 12/12/2012. Redacted Transcript Deadline set for 12/22/2012. Release of Transcript Restriction set for 2/19/2013. (ABB) (Entered: 11/21/2012)
465	11/21/2012	TRANSCRIPT of Proceedings, 448 JURY TRIAL – DAY 6 held on

		11/14/2012, before Judge Philip M. Pro. Court Reporter/Transcriber: Exceptional Reporting Services, Inc., 361-949-2988. Transcript may be viewed at the court public terminal or purchased through the Court Reporter/Transcriber using the court's "Transcript Order" form available on our website www.nvd.uscourts.gov before the deadline for Release of Transcript Restriction. After that date it may be obtained through PACER Redaction Request due 12/12/2012. Redacted Transcript Deadline set for 12/22/2012. Release of Transcript Restriction set for 2/19/2013. (ABB) (Entered: 11/21/2012)
467	11/21/2012	TRANSCRIPT of Proceedings, 460 JURY TRIAL – DAY 8 held on 11/16/2012, before Judge Philip M. Pro. Court Reporter/Transcriber: Heather Newman, 702-464-5828. Transcript may be viewed at the court public terminal or purchased through the Court Reporter/Transcriber using the courts "Transcript Order" form available on our website www.nvd.uscourts.gov before the deadline for Release of Transcript Restriction. After that date it may be obtained through PACER Redaction Request due 12/12/2012. Redacted Transcript Deadline set for 12/22/2012. Release

		of Transcript Restriction set for 2/19/2013. (ABB) (Entered: 11/21/2012)
468	11/21/2012	TRANSCRIPT of Proceedings, 463 JURY TRIAL – DAY 9 held on 11/19/2012, before Judge Philip M. Pro. Court Reporter/Transcriber: Exceptional Reporting Services, Inc., 361-949-2988. Transcript may be viewed at the court public terminal or purchased through the Court Reporter/Transcriber using the court's "Transcript Order" "form available on our website www.nvd.uscourts.gov before the deadline for Release of Transcript Restriction. After that date it may be obtained through PACER Redaction Request due 12/12/2012. Redacted Transcript Deadline set for 12/22/2012. Release of Transcript Restriction set for 2/19/2013. (ABB) (Entered: 11/21/2012)
482	11/26/2012	JURY VERDICT. (AC) (Entered: 11/27/2012)
479	11/27/2012	TRANSCRIPT of Proceedings, 471 JURY TRIAL – DAY 10 held on 11/20/2012, before Judge Philip M. Pro. Court Reporter/Transcriber: Felicia Zabin, 702-676-1087. Transcript may be viewed at the court public terminal or purchased through the Court Reporter/Transcriber using the court's "Transcript Order" form available on our website www.

		nvd.uscourts.gov before the deadline for Release of Transcript Restriction. After that date it may be obtained through PACER Redaction Request due 12/18/2012. Redacted Transcript Deadline set for 12/28/2012. Release of Transcript Restriction set for 2/25/2013. (ABB) (Entered: 11/27/2012)
514	01/11/2013	MOTION for Entry of Findings of Fact and Conclusions of Law by Defendants Pulse Electronics Corporation, Pulse Electronics Inc. (Attachments: # 1 Appendix, # 2 Proposed Order)(Reed, Kristopher) (Entered: 01/11/2013)
517	01/25/2013	RESPONSE to 514 MOTION for Entry of Findings of Fact and Conclusions of Law, filed by Plaintiff Halo Electronics, Inc.. Replies due by 2/4/2013. (Attachments: # 1 Appendix A, # 2 Proposed Order)(Countryman, Craig) (Entered: 01/25/2013)
518	02/01/2013	REPLY to Response to 514 MOTION for Entry of Findings of Fact and Conclusions of Law filed by Defendants Pulse Electronics Corporation, Pulse Electronics Inc. (Attachments: # 1 Exhibit A)(Reed, Kristopher) (Entered: 02/01/2013)
522	05/28/2013	ORDER re 514 Defendants Pulse Electronics, Inc. and Pulse Electronics Corporations Motion for Entry

		of Judgment of Findings of Fact and Conclusions of Law Under Rule 42. Pulse has not met its burden to prove the asserted patent claims are obvious. Pulse also has not met its burden to show Halo committed inequitable conduct before the PTO, that Halo should be equitably estopped from enforcing the claims, or that Halo should be barred under laches from collecting damages incurred prior to the filing of this lawsuit. Similarly, Halo has not met its burden to show Pulse willfully infringed the asserted patent claims. The Court therefore finds that Judgment should be entered in favor of Halo and against Pulse, with the exception of the issue of willfulness. Signed by Judge Philip M. Pro on 5/28/2013. (Copies have been distributed pursuant to the NEF-EDS) (Entered: 05/28/2013)
523	05/28/2013	JUDGMENT in favor of Plaintiff Halo Electronics, Inc. and against Defendants Pulse Electronics Corporation and Pulse Electronics Inc in the amount of #1,500,000.00. Signed by Judge Philip M. Pro on 5/28/2013. (Copies have been distributed pursuant to the NEF-EDS) Modified on 5/28/2013 to correct judgment type (EDS) (Entered: 05/28/2013)

UNITED STATES COURT OF APPEALS
FOR THE FEDERAL CIRCUIT

13-1472

Halo Electronics, Inc. v.
Pulse Electronics Corporation

Case Number: 13-1472
Date Filed: 06/26/2013
Date Full Case Retrieved: 11/19/2015
Status: Terminated 10/22/2014
NOS Description: (999) 830: Patent Infringement (Fed. Question); Appeal

10/22/2014 OPINION and JUDGMENT filed, The judgment or decision is: Affirmed. (Precedential Opinion). (For the Court: Lourie, Circuit O'Malley,Circuit Judge and Hughes Circuit Judge). Concurring opinion filed by Circuit Judge O'Malley with whom Circuit Judge Hughes joins. [191619]

03/23/2015 PRECEDENTIAL ORDER filed denying petition for en banc rehearing filed by Halo Electronics, Inc. in 13-1472, denying petition for en banc rehearing filed by Pulse Electronics, Inc. and Pulse Electronics Corporation in 13-1472; denying petition for panel rehearing filed by Pulse Electronics, Inc. and Pulse Electronics Corporation in 13-1472. By: En Banc (Per Curiam). Service as of this date by Clerk of Court. [226147] [13-1472, 13-1656]

10/19/2015 **The petition for writ of certiorari, [14-1513], filed on 06/22/2015, was Granted on 10/19/2015. [282853]**

Michael J. Kane (kane@fr.com) (*pro hac vice*)
William R. Woodford (woodford@fr.com) (*pro hac vice*)
Joshua H. Bleet (bleet@fr.com) (*pro hac vice*)
FISH & RICHARDSON P.C.
60 South Sixth Street, Suite 3300
Minneapolis, MN 55402
Telephone: (612) 335-5070
Facsimile: (612) 288-9696

Juanita Brooks (brooks@fr.com) (*pro hac vice*)
FISH & RICHARDSON P.C.
12390 El Camino Real
San Diego, CA 92130
Telephone: (858) 678-5070
Facsimile: (858) 678-5099

Joshua L. Harmon (jharmon@h-dlaw.com)
Nevada Bar No. 7004
HARMON & DAVIES, P.C.
1428 S. Jones Blvd.
Las Vegas, NV 89146
Telephone: (702) 733-0036
Facsimile: (702) 733-1774

Attorneys for Plaintiff
Halo Electronics, Inc.

UNITED STATES DISTRICT COURT DISTRICT OF NEVADA

HALO ELECTRONICS, INC., Plaintiff, v. BEL FUSE INC., PULSE ENGINEERING, INC., and TECHNITROL, INC., Defendants.	2:07-cv-00331 FIRST AMENDED COMPLAINT FOR PATENT INFRINGEMENT **JURY TRIAL DEMANDED**

FIRST AMENDED COMPLAINT FOR PATENT INFRINGEMENT

Plaintiff, Halo Electronics, Inc. files this First Amended Complaint and demand for jury trial seeking relief for patent infringement by the Defendants. Halo Electronics, Inc. states and alleges the following:

JURISDICTION AND VENUE

1. This is an action for patent infringement arising under patent laws of the United States, 35 U.S.C. §§ 100 *et seq*. This Court has subject matter jurisdiction pursuant to 28 U.S.C. §§ 1331 and 1338(a).

2. This court has personal jurisdiction over each of the Defendants because each Defendant has substantial and continuous contact within this judicial district and/or because each Defendant has committed acts of patent infringement within this judicial district, including placing infringing products into the

stream of commerce under circumstances such that each Defendant reasonably should have anticipated being subject to suit in this judicial district. The Court also has personal jurisdiction over each of the Defendants because the acts of patent infringement are aimed at this judicial district and/or have effect in this judicial district.

3. Venue is proper in this District pursuant to 28 U.S.C. §§ 1391(b) and (c) and 1400(b).

THE PARTIES

4. Plaintiff Halo Electronics, Inc. ("Halo") is a corporation organized and existing under the laws of the state of Nevada, and having its principal place of business at 3005 East Post Road Front, Las Vegas, Nevada.

5. Defendant Bel Fuse Inc. is a corporation organized and existing under the laws of the state of New Jersey. Bel Fuse Inc.'s headquarters is located at 206 Van Vorst Street, Jersey City, New Jersey.

6. Defendant Pulse Engineering, Inc. is a corporation organized and existing under the laws of the state of Delaware. Pulse Engineering, Inc.'s worldwide headquarters is located at 12220 World Trade Drive, San Diego, California.

7. Defendant Technitrol, Inc. is a corporation organized and existing under the laws of the state of Pennsylvania. Technitrol, Inc.'s corporate headquarters

is located at 1210 Northbrook Drive, Suite 470, Trevose, Pennsylvania.

8. Defendant Pulse Engineering, Inc. is a subsidiary of Technitrol, Inc.

COUNT I
(Patent Infringement)

9. Halo restates and realleges the preceding paragraphs of this First Amended Complaint.

10. On August 12, 1997, United States Patent No. 5,656,985 ("the '985 patent") entitled "Electronic Surface Mount Package" was duly and legally issued by the United States Patent and Trademark Office. Halo owns the '985 patent by assignment. A true and correct copy of the '985 patent is attached as Exhibit A.

11. On October 2, 2001, United States Patent No. 6,297,720 ("the '720 patent") entitled "Electronic Surface Mount Package" was duly and legally issued by the United States Patent and Trademark Office. Halo owns the '720 patent by assignment. A true and correct copy of the '720 patent is attached as Exhibit B.

12. On October 2, 2001, United States Patent No. 6,297,721 ("the '721 patent") entitled "Electronic Surface Mount Package" was duly and legally issued by the United States Patent and Trademark Office. Halo owns the '721 patent by assignment. A true and correct copy of the '721 patent is attached as Exhibit C to this Complaint.

13. On November 20, 2001, United States Patent No. 6,320,489 ("the '489 patent"), entitled "Electronic Surface Mount Package With Extended Side Retaining Wall," was duly and legally issued by the United States Patent and Trademark Office. Halo owns the '489 patent by assignment. A true and correct copy of the '489 patent is attached as Exhibit D.

14. On February 5, 2002, United States Patent No. 6,344,785 ("the '785 patent"), entitled "Electronic Surface Mount Package," was duly and legally issued by the United States Patent and Trademark Office. Halo owns the '785 patent by assignment. A true and correct copy of the '785 patent is attached as Exhibit E.

15. On December 16, 2003, United States Patent No. 6,662,431 ("the '431 patent"), entitled "Electronic Surface Mount Package," was duly and legally issued by the United States Patent and Trademark Office. Halo owns the '431 patent by assignment. A true and correct copy of the '431 patent is attached as Exhibit F.

16. Defendant Bel Fuse, Inc. has been and is infringing, actively inducing others to infringe, and/or contributing to the infringement of the '985, '720, '721, '489, '785, and '431 patents by making, using, selling, and/or offering to sell surface-mount transformers embodying the patented inventions and/or devices that have or contain an electronic surface-mount package embodying the patented inventions, including, but not limited to, part number S558-5500-12-F.

17. Defendants Pulse Engineering, Inc. and Technitrol, Inc. have been and are infringing, actively inducing others to infringe, and/or contributing to the infringement of the '985, '720, '721, '489, '785, and '431 patents by making, using, selling, and/or offering to sell surface-mount transformers embodying the patented inventions and/or devices that have or contain an electronic surface-mount package embodying the patented inventions, including, but not limited to, part numbers H1102NL and HX1188NL.

18. Upon information and belief, Defendants have been and are infringing the '985, '720, '721, '489, '785, and '431 patents with knowledge of one or more of the patents, and thus Defendants' infringement is willful.

19. Upon information and belief, Defendants will continue to infringe the '985, '720, '721, '489, '785, and '431 patents unless and until they are enjoined by this Court.

20. The Defendants have caused and will continue to cause Halo irreparable injury and damage by infringing the '985, '720, '721, '489, '785, and '431 patents. Halo will suffer further irreparable injury, for which it has no adequate remedy at law, unless and until the Defendants are enjoined from infringing the '985, '720, '721, '489, '785, and '431 patents.

PRAYER FOR RELIEF

WHEREFORE, Halo respectfully requests that this Court:

(1) Enter judgment that Defendants have infringed the '985, '720, '721, '489, '785, and '431 patents;

(2) Enter an order permanently enjoining Defendants and their officers, agents, employees, attorneys, and all persons in active concert or participation with any of them, from infringing the '985, '720, '721, '489, '785, and '431 patents;

(3) Award Halo damages in an amount sufficient to compensate it for Defendants' infringement of the '985, '720, '721, '489, '785, and '431 patents, together with prejudgment and post judgment interest and costs under 35 U.S.C. § 284;

(4) Treble the damages awarded to Halo under 35 U.S.C. § 284 by reason of Defendants' willful infringement of the '985, '720, '721, '489, '785, and '431 patents;

(5) Declare this case to be "exceptional" under 35 U.S.C. § 285 and award Halo its attorney fees, expenses, and costs incurred in this action; and

(6) Award Halo such other and further relief as this Court deems just and proper.

JURY TRIAL DEMAND

Halo demands a trial by trial on all issues appropriately triable by a jury.

Dated: July 27, 2007 FISH & RICHARDSON P.C.

By: /s/ William R. Woodford
William R. Woodford

Attorney for Plaintiff
HALO ELECTRONICS, INC.

CERTIFICATE OF SERVICE

I certify that on July 27, 2007, I caused a true and correct copy of the **FIRST AMENDED COMPLAINT FOR PATENT INFRINGEMENT** to be filed electronically with the Clerk of Court through ECF, and ECF will send an email notice of the electronic filing to the following:

Jason Firth – Counsel for Defendant
firthj@gtlaw.com Bel Fuse, Inc.
GREENBERG TRAURIG, LLP
3773 Howard Hughes Parkway
Suite 500 North
Las Vegas, NV 89169

Joshua L. Raskin –
jraskin@wolfblock.com
Martin G. Raskin –
mraskin@wolfblock.com
WOLF BLOCK SCHORR AND
SOLIS-COHEN LLP
250 Park Avenue
New York, NY 10177

Counsel for Defendant
Bel Fuse, Inc.

Kelly A. Evans –
kevans@swlaw.com
Paul Swenson Prior –
sprior@swlaw.com
SNELL & WILMER L.L.P.
3883 Howard Hughes Parkway
Suite 1100
Las Vegas, NV 89169

Counsel for Defendants
Pulse Engineering, Inc.
and Technitrol, Inc.

David E. Sipiora –
desipiora@townsend.com
Kristopher L. Reed –
klreed@townsend.com
TOWNSEND AND TOWNSEND
AND CREW LLP
1200 17th Street, Suite 2700
Denver, CO 80202

Counsel for Defendants
Pulse Engineering, Inc.
and Technitrol, Inc.

/s/ William R. Woodford
William R. Woodford

UNITED STATES DISTRICT COURT
DISTRICT OF NEVADA
LAS VEGAS DIVISION

HALO ELECTRONICS, INC.,	CASE NO: 2:07-CV-331-PMP-PAL
Plaintiff,	CIVIL
vs.	Las Vegas, Nevada
PULSE ELECTRONICS, INC., ET AL.,	Wednesday, November 7, 2012
Defendants.	(8:59 a.m. to 12:02 p.m.) (1:17 p.m. to 4:34 p.m.)

JURY TRIAL – DAY 2

BEFORE THE HONORABLE PHILIP M. PRO,
UNITED STATES DISTRICT JUDGE

APPEARANCES:	See page 2
Law Clerks:	Kara Rickey/Cristen Thayer
Court Recorder:	Henry Enriquez
Courtroom Administrator:	Donna Sherwood
Transcribed by:	Exceptional Reporting Services, Inc. P.O. Box 18668 Corpus Christi, TX 78480-8668 361 949-2988

Proceedings recorded by electronic sound recording; transcript produced by transcription service.

[30] THE WITNESS [Jeffrey Heaton]: When it began to affect our business was about 1992.

THE COURT: So, shortly after you started.

THE WITNESS: Exactly.

THE COURT: All right.

THE WITNESS: Yes, sir.

BY MR. MELSHEIMER:

Q So, then, we have here on the right-hand side, sir, just an example of surface mounting, and why don't you walk us through that as well, just like you did with the through-hole mounting.

A So, here the horizontal green area, again, is the printed circuit board. Those little blue dabs are solder paste that's been applied to the board, and then the pick-and-place equipment will come grab the part and load it onto the board right on the solder pads that have those – that solder paste. Then it will go through a different type of a reflow process, and as you can see here, unlike – with the through-hole process the heat was all on the bottom side of the board. The printed circuit board effectively created a nice blanket, a insulation blanket where that heat doesn't get up to the component. Now the entire component is just bathed in this high temperature. So, it's quite a bit different requirement for the component now.

Q Mr. Heaton, was there some advantage to your customers to [31] the surface-mount technology?

A Absolutely.

Q What were those advantages?

A Well, if we go back to the pictures that are here, you can see with the surface-mount part the entire bottom side of the printed circuit board has now been opened up. We can either add more components or the customer can add more components there to add more features to his product or he can shrink the size of his total product, which as you see today with your telephones, those were effectively computers that used to be gigantic and now you've got a pocket-sized computer. Surface-mount technology has been a big part of the ability to do that.

Q So, it sounds like this was pretty good for your customers, but was it challenging for Halo?

A Absolutely.

Q What were the problems you were having at Halo with this new surface-mount technology?

A The high temperature that the body was seeing created a lot of stresses on the parts; the parts began to crack or twist; we had some electrical issues internally that we had never had before with the through-hole components.

Q What was causing those kinds of failures that you described?

A It was the high temperature and then a thing called "thermal expansion" of the materials, of the package, and what [32] was inside the package.

Q Can you tell the jury what you mean by "thermal expansion"?

A Yeah. As materials heat up, they will tend to expand, and as they cool down, they will contract again. That builds up a lot of pressures inside of a – or can build up a lot of pressure inside of a package for – for a component like this.

Q Had these problems existed with your through-hole package?

A No. Again, with having the heat on the bottom side of the board we just didn't have to deal with this at all.

Q We're going to talk about this some more, sir. You didn't mention, and I want to ask you about it; was there a problem with moisture in connection with the manufacturing and putting together these components on the printed circuit boards?

A Right. Moisture would certainly add to the problems we were having, just make it worse. If moisture was stuck inside of the package, it would expand even further and create more stresses.

Q I just want you to just explain on that a – expound on that a little bit, sir. So, I mean, we're not talking about, you know, pouring a glass of water on these things, are we?

A That's correct.

Q All right. Now, these things are very small, correct?

A Yes. Uh-huh.

Q So, what is it about – how much moisture do you have to

* * *

[59] numbers demonstrating those prototypes that we had received.

Q Is this – is the date on this document, sir, August of 1994, is that consistent with your memory about how and when you received the samples?

A Yes, it is.

Q What did you do with the samples once you got them?

A Again, because we were a small company with limited resources both my brother and me wanted to have the opportunity to do some hands on testing ourselves. So, I took a quantity of these parts and took them home with me and, much to my wife's amazement, pre-heated her oven as high as it would go and put the parts on a cookie sheet and once the oven was preheated, I put the parts in, trying to create as great a thermal shock as I could.

Q Sounds like you might have created some shock around the house. Mr. Heaton, why didn't you just take these parts to Halo's high tech testing lab?

A That would have been nice. We did not have such a thing in those days.

Q What did you find out after you – well, you don't have such a thing today, do you?

A We don't. Our partner does.

Q So, what happened when you put the sample parts in the oven? What did you do, leave them in there for a while?

A I did. I left them in longer than I knew they would be [60] exposed to in our customers' process trying to make a worst case scenario, and then pulled them out.

Q What was the result of this home testing?

A It was excellent. I didn't actually expect them to crack, but I was really just focused on was there any twisting; was there any warping; was there any evidence of thermal expansion that had changed the mechanical package and we were just thrilled to see the great results we saw.

Q Did it stink up your kitchen a little bit?

A A little bit.

Q So, at this point, was this the kind of test where you could say, "We're done. This thing's proven it works"?

A No, sir.

Q Why not?

A Even today, with more equipment available to us, it's very difficult to emulate our customers'

processes. So, we felt we really needed to find some customers who would be willing to test parts in their process.

Q Did you communicate with two different companies about testing your new design?

A We did.

Q Which companies were those, sir?

A Hewlett Packard and a company called Chipcom.

Q Now, Hewlett Packard we've certainly heard of. Is that the computer and printer company?

[61] A Yes, it is.

Q What is Chipcom?

A They're a manufacturer of networking equipment, switches, routers, and so forth.

Q So, let's first talk about your interactions with Hewlett Packard, sir. What were the discussions between Halo and Hewlett Packard about this sample design?

A Hewlett Packard was migrating quickly from through-hole components to surface mount components. They'd already experienced some issues with some competitive product in the industry and wanted to try a number of different manufacturers' parts to see which might be the most reliable.

Q Did Halo end up sending some samples to HP?

A We did.

Q Take a look at Plaintiff's Exhibit 50, sir, in your book.

Your Honor, I believe there's no objection to Plaintiff's Exhibit 50.

THE COURT: Any objection to 50?

MR. SIPIORA: None, your Honor.

THE COURT: That will be received.

(Plaintiff's Exhibit Number 50 was received in evidence)

BY MR. MELSHEIMER:

Q What is Plaintiff's Exhibit 50, sir?

A This is an invoice for a shipment – a small quantity shipment – to Hewlett Packard.

[62] Q What is the date of it?

A The invoice date is October 26th, 1994.

Q And what is it about this invoice that tells you these were the samples that you sent to Hewlett Packard to test?

A The small quantity here would indicate that this is not going to be a production order. This was a high volume division of Hewlett Packard. Two hundred

pieces wouldn't even get them to start turning their production line on.

Q What was Hewlett Packard's reaction after they received these samples?

A They were pretty skeptical. It was a new looking part. It was a new technology. They were a little concerned about the exposed solder joints bottom of the part and they were skeptical.

Q Do you know if Hewlett Packard ever actually tested these samples?

A I can't confirm that, no.

Q Did you ever receive a report back from them of any testing they'd done?

A No.

Q Did they end up placing any orders for the product at that time?

A No.

Q Now, did a division of Hewlett Packard end up purchasing the Halo products several years later?

* * *

[130] Q And the reason why is because through-hole technology would have no need for this gull wing leading out, because it's actually attaching under the board, right?

A It's our what – attaching under the board –

Q The leads are actually being soldered underneath the board.

A I'm sorry, I'm not following your question.

Q Okay, sure. Let me rephrase that.

So when you see the gull wing technology, the gull wings into this line, you can pretty much tell it's surface mount technology, right?

A That is correct.

Q All right. Because through-hole could be the alternative before – these, (indicating), things go right to the board. You don't need this going out the top of the board, right?

A That's correct.

Q So this surface mount technology we're seeing they were using this gull wing construction, correct?

A That was one of the constructions, yes.

Q So you are not claiming that this gull wing, the design, which is in your – claims of your patent, is something that Halo developed.

A That's correct.

Q It was well known.

A Correct.

* * *

[134] Q – to the Toroid.

A That's correct.

Q And that forms a connection.

A That's correct.

Q Now, you don't claim that the concept of a notched post is something that is unique to your patent, correct?

A That's correct.

Q In fact, this drawing in 1992 from Perfect Brave shows a notched post if you turn to the second page. Do you see that?

A Yes.

Q And that's a notched post of the type that is described in your invention, correct?

A That's correct.

Q Okay. So at least in 1992 we already know that Halo was using a notched post in an earlier design, correct?

A That's correct.

Q Now, if you could stay with this drawing just for a minute, that same page. On this drawing – and just to be clear so everyone can see this – I guess I can –

MR. SIPIORA: Can we blow it up just a little bit so we know what we're talking about to make sure everybody is following?

That's the notched post that we're talking about in the 1992 PBL drawing that we're looking at, correct?

A Yes, that's correct.

[135] Q Yeah, okay. And that's the same type of shape, the hourglass shape, literally that phrase, hourglass shape, that appears in some of the claims of your patent, correct?

A I believe so, yes.

Q It's describing that same very thing, correct?

A I believe so.

Q Okay. And we've established then that that feature is not new or novel in your patent, you already were doing it in '92.

A Yes.

Q Okay. Now, if you can take a look at the drawing, that same drawing, we can push that back. And if you look at line number 8 –

MR. SIPIORA: If you could just – that, Mr. Traux, just above that, maybe pick up the whole thing all the way down to the drawing. Okay.

Q So it says, "Lead frame Valor P/N 300-0010 is an acceptable alternate." Do you see that?

A I do.

Q That's the reference to a Valor part number, correct?

A It appears to be.

Q All right. And Valor is one of the competitors that existed in the market before you were formed as a business, correct?

A That's correct.

Q All right. And when it says this part number is an [136] acceptable alternate, it's saying that with respect to this particular feature a Valor part could be used instead, correct?

A Valor lead frame it appears – yes.

Q Okay. So if we could pull up DTX – I'm going to do it this way again through – DTX-559, if you would go through your notebook there, please. And if you could –

MR. SIPIORA: I don't believe there's any objection to this exhibit.

THE COURT: Is there any objection to 559?

MR. MELSHEIMER: No objection, your Honor.

THE COURT: Thank you. 559 will be received then.

(Defendants' Exhibit Number DTX-559 was received in evidence)

BY MR. SIPIORA:

Q All right. So if you could – this drawing is a Valor drawing, correct?

A I'm sorry, it's a what?

Q A Valor drawing.

THE COURT: Valor, V-a-l-o-r?

MR. SIPIORA: Right.

THE WITNESS: Sitting here I don't know how I can confirm that. Is there a name on it somewhere?

BY MR. SIPIORA:

Q Yeah. I need my glasses actually to see it.

(Pause)

[137] So first of all let's look at the bottom right. This is a – it's hard to read. It says lead – do you see on the bottom it says "leadframe"?

A Yes.

Q Okay. And if you'd look at page – the third page in, which is – all right. Do you see the number 30001 – 0010 on the top?

A Yes, I do.

Q Okay. And that –

MR. SIPIORA: If we could just pull back – I'm sorry, Mr. Traux. If you could go back to admitted

Exhibit 560 just for a minute. If you'd go to Line 8. I like that . . .

Q Do you see the number there, Valor Part Number 300-0010? Do you see that number?

A Yes, I do.

Q Okay. Now we go back to Exhibit 559. And do you see at the upper right there 300-0010?

A Yes, I do.

Q Okay. And that corresponds to the Valor part number described earlier as a substitute in your drawings or PBL's drawings for this particular component, correct?

A I can't confirm that.

Q Well, the numbers are the same.

A I can confirm the numbers are the same.

Q Okay. But you can't confirm this is a Valor part. Is [138] that what you're saying?

A That's correct.

Q Okay. If you would go to the first page of this document. And it says in the middle of the page, it says "From so-and-so Valor East." Do you see that?

A Yes, I do.

Q Okay. So it says there it's Valor East and it's the exact same part number as referred to in your previous drawing, correct?

A The same part number, yes.

Q Okay. So let's go to the drawing that we saw previously on that page.

MR. SIPIORA: On the right-hand side, if you could blow that up.

Q And that's a notched post, isn't it?

A It appears to be.

Q And if you look at it, it's got the hourglass shape just the same as we saw on that previous drawing from 1992 from PBL, correct?

A Yes.

Q Okay. And, in fact, if you put these together

MR. SIPIORA: And if we could pull up demonstrative DEMO-2.

Q So on the left-hand side, if you follow with me here, these are drawings for the solder post we've just been looking [139] at. On the left – I'm sorry – on the right is the Halo design which we saw, which is 560, which has the detail A; it shows the dimensions.

And on the left is this 1989 document, which has Part Number 300-0010 in reference to Valor. Do you follow me?

A Yes, I do.

Q Okay. Do you see any differences in the dimensions between these two drawings?

A Not in the dimensions that are provided. They appear to be the same.

Q Okay. These drawings are virtually – they're identical in their dimensions down to the hundredths, thousandths of a measurement, correct?

A In the section we are looking at, yes.

Q Okay. So is it fair to say that the Halo drawing is identical to the 1989 Valor drawing?

A Of this section of it, yes.

Q Yeah. And this section being the drawing that shows the notched post, correct?

A Correct.

Q And this is the same notched post that you find in 1994 or 1995 when you filed the patent application, correct?

A I don't know that to be true.

Q Okay. Well, we'll get to that. But at least this far we can agree that your 1992 or PBL's 1992 notched post is [140] identical to the notched post that Valor had, identical in this drawing from 1989.

A It appears to be.

Q One of the things – I'm going to switch gears.

MR. SIPIORA: We can take that down.

Q One of the things that you talked about was this notion of open construction. Do you recall that testimony?

A Yes.

Q All right. And from your point of view this is seminal to your inventions, critical to your invention, the idea of moving away from a box that's closed to a package or a box that's open, correct?

A That was part of what was important, yes.

Q Well, the phrase that you've used over time to describe your invention in shorthand is "open construction," correct?

A Correct.

Q And open construction is shorthand for the idea of opening that box to overcome those heat issues you talked about.

A No, that's not correct.

Okay. So you do use the phrase "open construction" as a shorthand for your invention, correct?

A We do.

Q Okay. Now, are you aware of the fact that prior to development of whatever you did develop in 1994-95, there were other surface mount open construction products on the market?

[141] A I am not aware of that.

Q Okay. Well, there was a product called the Bel Fuse Topper that was an open bottom, surface mount product that existed before your conception, correct?

A I don't know that to be true.

Q Okay.

MR. SIPIORA: So let's pull up JH-40, please.

"QUESTION: Prior to you developing this open construction design in 1994, were you aware of any open construction surface mount transformers on the market?

"ANSWER: I was not. Since then, I've – I've – I've learned through this process that there was something called a topper that may have come out shortly before our part did."

BY MR. SIPIORA:

Q Did I ask you that question and did you give that answer in your deposition?

A I did.

Q So, in fact, you did learn that there was this thing called the Topper made by Bel Fuse, which is the company that you used to sell for and that terminated you and led to your development of Halo, correct?

A That was a bunch of questions there, let's –

Q Yeah, it was. So you came to know that prior to your [142] development of open construction that another company, Bel Fuse, had an open construction surface mount technology design, correct?

A Correct, I have heard hearsay. But there may have been something before our – before we developed our construction, that's correct.

Q And Bel Fuse displayed its concept of the Topper product, the Bel Fuse Topper, the open construction surface mount technology in 1993; isn't that correct?

A I don't know that I know that.

Q Okay.

MR. SIPIORA: Can we play JH-41, please?

"QUESTION: Well, the concept displayed in these data sheets from Bel Fuse in 1993, was that a concept of an open-bottom surface mount transformer part?

"ANSWER: Correct."

BY MR. SIPIORA:

Q So you were aware that before you had any conception of your claimed open bottom construction, another company, Bel Fuse, already had an open bottom surface mount technology construction, correct?

A Can you restate –

Q Sure -

A – that again, please?

Q Sure. Before – your conception was in the 1994 time [143] period, correct?

A That's correct.

Q And you're aware, as you have now acknowledged, that in 1993 you've come to know that another company, Bel Fuse, already had an open construction surface mount technology product, correct?

A Okay. Yes, I have come to be aware of that since then, yes.

Q So Bel Fuse had an open construction before you did, quite simple.

A Yes.

Q Okay.

THE COURT: It's a good point to break. We're right at the noon hour, so we'll go ahead and take our luncheon recess.

Ladies and gentlemen, we'll be in recess for an hour and 15 minutes. We'll reconvene at 1:15. If you could be back in the jury room by ten minutes after the hour, that would be great.

During this recess as you go out and grab lunch, please remember again the admonition not to discuss the case amongst yourselves or with others. Don't conduct independent research or investigation or

consider news accounts. And remember to reserve your judgment until the case is finally submitted with you.

[195] Q Now, you were asked some questions about open construction or open bottom and I want to make this clear. Is open bottom the same thing as open construction?

A No, it is not.

Q What is open bottom?

A Open bottom would be just an open bottom without the other elements of our patent.

Q What do you mean by open construction?

A Open construction is going to go ahead and have all of the elements of our patent. That's the term we use.

Q Now, you were asked a lot of questions on cross examination about, "Well, did you invent gull wings? Did you invent toroids? Did you invent transformers? Did you invent silicone?" Did you invent any of those things?

A No, we did not.

Q What is your invention, sir? Those individual items or is it the combination of all those items put together in a particular way?

A It is the combination of all of those things put together.

Q And where is that combination described as a matter of law? Where is it described?

A In our patent.

Q And did you ever claim to anyone that you'd invented silicone or gull wings or toroids or transformers?

A I never did.

* * *

CERTIFICATION

I certify that the foregoing is a correct transcript from the electronic sound recording of the proceedings in the above-entitled matter.

/s/ Toni Hudson — November 8, 2012
Signed — Dated

TONI HUDSON, TRANSCRIBER

UNITED STATES DISTRICT COURT
DISTRICT OF NEVADA
LAS VEGAS DIVISION

HALO ELECTRONICS, INC Plaintiff, vs. PULSE ELECTRONICS, INC., ET AL., Defendants.	CASE NO: 2:07-CV-331-PMP-PAL CIVIL Las Vegas, Nevada Thursday, November 8, 2012 (8:47 a.m. to 12:01 p.m.) (1:13 p.m. to 4:29 p.m.)

JURY TRIAL – DAY 3

BEFORE THE HONORABLE PHILIP M. PRO,
UNITED STATES DISTRICT JUDGE

APPEARANCES:	See page 2
Law Clerks:	Kara Rickey/Cristen Thayer
Court Recorder:	Henry Enriquez
Courtroom Administrator:	Donna Sherwood
Transcribed by:	Exceptional Reporting Services, Inc. P.O. Box 18668 Corpus Christi, TX 78480-8668 361 949-2988

Proceedings recorded by electronic sound recording; transcript produced by transcription service.

[72] THE COURT: I apologize. Let me interrupt. Does this switch from the lead to something that was not lead for solder relate to the claims at issue in this case?

MR. WOODFORD: It does have an impact, your Honor, on the design and why this design is more robust because it can deal with it.

THE COURT: I see. All right. All right. Go ahead. I'm sorry. Please continue.

THE WITNESS [Wilmer R. Bottoms Jr.]: So we were trying to delay the date certain when that banning of lead took place so that we had time to develop an alternative, and so it was delayed for quite a while. But finally in 2002, the EU published – European Union published a document that said by 2006 all lead is banned.

BY MR. WOODFORD:

Q Well, and I may ask you some questions about that a little bit later on, but thank you for the introduction to that issue.

Now, you were saying that the packages were failing. Can you give us an example of a failure that was occurring because of this – you know, this high heat?

A Well, this – at this point we've already heard that so I'll repeat it. There are several types of failure that occur, as we heard yesterday. The wires can break. The package can warp. The package can

actually crack. The lid, if it's a two-piece package, can get blown off by the force of that [73] expansion, a lot of things that happen to cause failure.

Q So you just mentioned the two-piece package, and we heard a lot about the two-piece package yesterday. Could you just describe that in a little more detail for the jury?

A I think I have a demonstrative that shows that. So what we're looking at here is the same two-piece package that Halo was manufacturing that Peter Lu talked about yesterday except I've got two different colors of the same material. The black material on the bottom is the plastic that the lead is embedded in, and that's called the header of the package. And the lighter color, the gray color on the top, which I guess I can circle this color, that's called the lid.

And so in this case, they would glue the lid onto the header with a glue that should be strong enough to survive the forces they expected to overcome. And that hole that's in there is to let us go in, look in and see the wires and you can see the posts and you can see the toroids. That's not there for us to see; it's there because they have to put something inside. So their solution to make it mechanically robust and make it strong was to put plastic material and filling up all that extra space inside.

And so let's go to the next step, and it filled up all the space. And we didn't see the dynamics of that space being filled, but now we're left with this package composed of a lid glued to a header and filled

with epoxy. And if I just [74] take the other parts off and see what that plastic epoxy that was inserted looks like, let's take those off and now you can see it. So now it looks like basically one big piece of plastic epoxy with the lids – with the leads coming out of it.

Q So what specifically would happen with this part when it went through the surface mount soldering process?

A Well, this part had a lot more causes for failure than some of the others, and it was typical of what people were building at the time. Maybe say more about that later. But as the components inside would get heated, they would swell, and so they got larger because things expand when you heat them. And eventually, the pressure of that could cause the package to fail. And as we heard yesterday, if you crack the case, if you pop the lid off, it could actually damage the toroid inside because the toroid can be damaged by being subjected to pressure. It can break the wires. It can even cause it to warp. So when I push it down to solder it, the warpage prevents all the pins from making the contact necessary to get it in to the joint.

Q So can I follow up on a couple of those? When you said if the pressure on the cores that could cause some sort of failure, what does that mean?

A The – say that again.

Q Well, you said that there's pressure on the internal of the toroids that we were seeing.

[75] A Oh, yes, on the cores, I'm sorry. I didn't catch that word. So the toroids that are inside, and if you had donuts yesterday as the Judge described them, you know exactly what these are except they are except they are way smaller of materials. I've never seen material that size. They are tiny little things, but they're ferrite materials. So that means they're magnetic materials, and they have magnetic properties when you subject them to a current flowing around them. They actually absorb energy into the magnetic field. And the properties, the electromagnetic properties of that material, are critical to its proper operation.

And I won't go into all of the technical details behind that, but when you put large pressure on the cores, particularly if the pressure is differential, that is if some part gets a lot pressure and something doesn't, the magnetic – electromagnetic properties change and the circuit won't work correctly anymore. So you can actually cause complete circuit failure, not able to perform the function for which it was designed just by putting that pressure on it. So as those toroids try to expand and that epoxy or the plastic tries to expand and puts that pressure on (indiscernible).

Q What about the issue of the breaking wires, how did that happen?

A Well, a similar kind of thing. You know, the wires – obviously as these things expand and contract, the wires will [76] get flexed. And since the cores are that small, the wires are a lot smaller. It

can break the wires. We could also have a situation where the plastic was actually holding the wire really tightly. And it's attached to a metal piece on the other end. And maybe they move with respect to one another, the wire could break. So without defining it to one single mechanism, the stresses associated with the mechanical movement and the mechanical forces can cause those wires to break when you heat the package to an elevated temperature.

Q Now, we've heard previously during this case the concept of moisture and moisture in these parts. Explain that to us.

A Yes. These plastic materials that are used, they have a property that's called hydroscopic property – hydroscopic property. It's spelled h y d r o p s c o p i c, hydroscopic. And that means it absorbs moisture. Well, and we heard that this work takes place in – a lot of it in Asia, where temperature and humidity is high. Some of you have been there undoubtedly have experienced that yourself. And when that moisture is absorbed by these materials and then you put it in a sealed package, when you heat it above the boiling point of water it wants to turn into steam.

Well, the boiling point of water on a Centigrade scale, it's 100 deals Centigrade, Fahrenheit 212 degrees. What temperature are we heating these to, 480 degrees in the extreme – actually, we'll get to extreme, but in the surface mount it [77] goes up to 440 on all of these processes and higher as we go to lead-free. And so that's why it's relevant that we

wanted the lead-based solder. That's a huge temperature change, and that can cause – the steam builds up pressure and eventually blows holes in it. They actually call that popcorning. You can –

Q Let me stop you there. Popcorning?

A Popcorning, yes.

Q Okay. What is that?

A Well, you've all seen popcorn, right? Why do those corns pop? You know, you have little kernels and they pop. It's because there's moisture inside. And as you heat it up, when it gets to a hot enough temperature that the pressure is greater than the strength of that kernel it just blows it up. Then you can eat it, so it's useful in that case. It's not particularly useful in these packages because they're damaged. They can't be used if they have holes in them.

Q Now, the other – one of the other failures you mentioned was warping or twisting. Would you just describe specifically what that means?

A Yes. As force is exerted from inside of the package as it gets heated – and of course, it's exerted on the other parts as well – instead of being flat – and I know we heard Mr. Heaton testify that he put these things in the oven and took them back out, and they were still flat and he was so happy. These two-piece packages, if you put them in the oven [78] and take them back out, they're not flat. And so they can fail to make good contact. It's real critical when you take these leads and put them onto these pads that each

one of the pads is coplanar, a term that we heard described yesterday. They're in the same plane. All of the pads have to touch at the same time. If they don't, when we try to heat it so that the solder flows it may be flow but it won't join them together because they're not touching.

Q Just real briefly, the – we talked a lot about the two-piece construction. Were there other constructions that were sort of industry standards at that time for this type of part?

A Yes. And we heard about that yesterday as well, transfer molding. It basically generates the same thing. Instead of using two pieces to form a case and filling it with epoxy, you actually use a mold. You put the components in, the wires and the transformers and the leads, and then inject a plastic material in. It's epoxy as well. It's also hydroscopic, which means it absorbs the moisture. And all –

Q So would that part have the same failures?

A Yeah, all the same failure mechanisms can apply.

Q So what impact did this have on the industry?

A Well, the industry had a real crisis, and it was a bigger crisis for some than others because it meant that they were shipping relatively low-cost products, their customers were putting them on relatively high-cost products, putting them [79] through this automated soldering system, and then

having that part fail. And so now they've got this high-cost product that didn't work because the packages that were used to package these magnetic components didn't survive the assembly process with high enough heat.

Q So what impact did that have on Halo?

A Well, it had a bigger impact on Halo. As we heard, Halo was a tiny company. They didn't have many employees. They actually used a partner to do their manufacturing. And when they begin to have failures, if they lost their few customers, they actually wouldn't exist. I would say it actually threatened their existence, and we heard that testimony yesterday.

Q Okay. We've talked a lot about failures and why these parts failed. Let's move on and talk about solutions. What were companies doing to try to solve this problem at the time?

A Well, you know, the problem had actually been there for some time because people knew about it when they first started trying to use surface mount components. And of course, it became worse when we had to dispense with lead and go from 225 degrees to 260 degrees as the temperature to refill the solder. That's a little over 500 degrees Fahrenheit, about 505 degrees. And so now we've got failures and everybody is looking for ways to solve the failure. Everybody in the industry was. And they all used different approaches.

[80] As a matter of fact, at the same time there was another thing going on, and that is everybody that makes products is trying to make them smaller for reasons that you know and we've talked about it enough to go over them again. But in trying to make them smaller, you want to decrease the size of the package. There's several ways you could do that. You could get rid of posts where you wrap wire around it and solder it. That takes up space.

And there were proposals and prototype products that did that, in fact, even some products that were offered for sale. They reduced the size of the width of the package wall so that it didn't take up so much space. And I'll actually describe that later when we start talking about the Halo part. But all of these things decreased the strength and actually caused the problem to get larger. To the best of my knowledge, none of the solutions other than the solution that Halo eventually came up with was a successful solution to this problem.

Q Well, let's please talk about the – let's talk about the Halo solution. So how did Halo solve this problem?

A Well, you've heard quite a lot about it already, but I would like to describe it in a little more detail because even though we might be tempted to think that all it is is a linear sum of its components, in order for a complex something like this to work correctly all of the components are compromises.

* * *

CERTIFICATION

I certify that the foregoing is a correct transcript from the electronic sound recording of the proceedings in the above-entitled matter.

/s/ Toni Hudson — November 9, 2012
Signed — Dated

TONI HUDSON, TRANSCRIBER

UNITED STATES DISTRICT COURT
DISTRICT OF NEVADA
LAS VEGAS DIVISION

HALO ELECTRONICS, INC.,	CASE NO: 2:07-CV-331-PMP-PAL
Plaintiff,	CIVIL
vs.	Las Vegas, Nevada
PULSE ELECTRONICS, INC., ET AL.,	Friday, November 9, 2012
Defendants.	(8:15 a.m. to 12:05 p.m.) (1:16 p.m. to 4:42 p.m.)

JURY TRIAL – DAY 4

BEFORE THE HONORABLE PHILIP M. PRO,
UNITED STATES DISTRICT JUDGE

APPEARANCES:	See page 2
Law Clerks:	Kara Rickey/Cristen Thayer
Court Recorder:	Henry Enriquez
Courtroom Administrator:	Donna Sherwood
Transcribed by:	Exceptional Reporting Services, Inc. P.O. Box 18668 Corpus Christi, TX 78480-8668 361 949-2988

Proceedings recorded by electronic sound recording; transcript produced by transcription service.

[291] Q [Craig Countryman] And what does it tell you?

A [John Diggins] That some portion of their product is going to come back or come be sold here in the United States.

Q And why does it tell you that?

A Well, primarily you're going to spend a lot of money to develop products. You're going to try to sell them on a consumer market the U.S. If you don't have a UL stamp, you're not going to be able to sell them. So you've got to do that to recoup your finances.

Q And is the fact that Halo's products are UL certified, is that something that you promote to your customers?

A Yes, sir. All the time.

Q Okay. I'd like to talk to you about a little different area, your interactions with customers regarding the patented technology. Are you with me?

A Yes, sir.

Q When you first started working at Halo, had Halo begun selling its patented open mount – open construction surface mount transformers?

A Yes, sir, they had.

Q And do you remember any customer comments from the time when Halo first started selling the patented products?

A Sure. As a part of the design cycle I would go in and see design engineers, and I would always bring my bag of tricks and little samples. And I would go in with the engineer and I'd [292] bring out a sample and lay it on the table, and I would say that Halo has a patented type construction that's called open construction.

And the engineer would pick up the part and look at it, flip it over, and say "Hey, it's open on the bottom. I can see the toroids; I can see the wires. Is this a demo unit?" And I would say, "No, this is a production unit."

Q Did customers suggest to you that that open construction design that that was something unique, something they hadn't seen before?

A In the beginning, yes.

Q Is that not true anymore?

A That's correct.

Q And why is that do you think?

A Well, it's a little more common place these days. You seem to see it everywhere.

Q It's because some of your competitors have also started using open construction design?

A Yeah. I guess others have figured out it's pretty good technology, yes, sir.

Q Now, do you also give presentations to your customers about the Halo patented technology?

A Yes, sir, all the time.

MR. COUNTRYMAN: And I'd like to look at one of those, Mr. Ang. If we could put up Plaintiff's Trial

* * *

CERTIFICATION

I certify that the foregoing is a correct transcript from the electronic sound recording of the proceedings in the above-entitled matter.

/s/ Toni Hudson — November 13, 2012

Signed — Dated

TONI HUDSON, TRANSCRIBER

UNITED STATES DISTRICT COURT
DISTRICT OF NEVADA
LAS VEGAS DIVISION

HALO ELECTRONICS, INC., Plaintiff, vs. PULSE ELECTRONICS, INC., ET AL., Defendants.	CASE NO: 2:07-CV-331-PMP-PAL CIVIL Las Vegas, Nevada Tuesday, November 13, 2012 (8:50 a.m. to 12:02 p.m.) (1:14 p.m. to 4:28 p.m.)

JURY TRIAL – DAY 5

BEFORE THE HONORABLE PHILIP M. PRO,
UNITED STATES DISTRICT JUDGE

APPEARANCES:	See page 2
Law Clerks:	Kara Rickey/Cristen Thayer
Court Recorder:	Henry Enriquez
Courtroom Administrator:	Donna Sherwood
Transcribed by:	Exceptional Reporting Services, Inc. P.O. Box 18668 Corpus Christi, TX 78480-8668 361 949-2988

Proceedings recorded by electronic sound recording; transcript produced by transcription service.

57] BY MR. ADKISSON:

"QUESTION: When was the last time you spoke with Mr. Kowalski?

"ANSWER [Alan Benjamin]: The last time? Would have been mid-April.

"QUESTION: Where does he live?

"ANSWER: No, I take that back. It would have been mid-May.

"QUESTION: Where does he live?

"ANSWER: He lives north of Philadelphia in Pennsylvania.

"QUESTION: Is he easy for you to get ahold of?

"ANSWER: Yes. I can – I know his telephone number.

"QUESTION: Can you identify any steps that were taken by Pulse between 1999 and 2007 to avoid infringement of Halo's patents?

"THE WITNESS: No, I have no knowledge. I have no knowledge of it."

BY MR. ADKISSON:

"QUESTION: If we wanted to find out why Mr. Spanner never got a reply, who would be the best person to ask?

"THE WITNESS: Presuming that John got the letters, all right – provided if he actually

got them, I would imagine the best person to ask would be John."

* * *

CERTIFICATION

I certify that the foregoing is a correct transcript from the electronic sound recording of the proceedings in the above-entitled matter.

/s/ Toni Hudson — November 20, 2012
Signed — Dated

TONI HUDSON, TRANSCRIBER

UNITED STATES DISTRICT COURT
DISTRICT OF NEVADA
LAS VEGAS DIVISION

HALO ELECTRONICS, INC., Plaintiff, vs. PULSE ELECTRONICS, INC., ET AL., Defendants.	CASE NO: 2:07-CV-331-PMP-PAL CIVIL Las Vegas, Nevada Wednesday, November 14, 2012 (8:58 a.m. to 12:11 p.m.) (1:25 p.m. to 4:47 p.m.)

JURY TRIAL – DAY 6

BEFORE THE HONORABLE PHILIP M. PRO,
UNITED STATES DISTRICT JUDGE

APPEARANCES:	See page 2
Law Clerks:	Kara Rickey/Cristen Thayer
Court Recorder:	Henry Enriquez
Courtroom Administrator:	Donna Sherwood
Transcribed by:	Exceptional Reporting Services, Inc. P.O. Box 18668 Corpus Christi, TX 78480-8668 361 949-2988

Proceedings recorded by electronic sound recording; transcript produced by transcription service.

[11] CARRIE MUNSON, PLAINTIFFS' WITNESS, BY VIDEO DEPOSITION

(Began playing video deposition of Carrie Munson on August 19, 2010 at 9:06:08 a.m.)

EXAMINATION

"QUESTION: And you understand that you're here today as Pulse's corporate designee on a number of topics?

"ANSWER: Yes.

"When did Pulse first learn of one of the Halo patents that's involved in this case?

"ANSWER: In 1998.

"QUESTION: Who at Pulse learned of the patent in 1998?

"ANSWER: Ron Shutter.

"QUESTION: Did there come another point in time in which anyone at Pulse learned about one or more of the Halo patents-in-suit other than Mr. Shutter?

"ANSWER: Yes.

"QUESTION: When was that time?

"ANSWER: 1999.

"QUESTION: Who was Michael Bunny? What was his position?

"ANSWER: I'm not sure of the exact title, but it was director of marketing.

"QUESTION: Did there come a point in time in which someone else at Pulse learned about one of the Halo [12] patents other than Mr. Shutter or Mr. Bunny?

"ANSWER: Yes.

"QUESTION: At what point in time was that?

"ANSWER: 2004.

"QUESTION: What happened then?

"ANSWER: John Kowalski received a letter.

"QUESTION: What was Mr. Kowalski's position?

"ANSWER: The president of Pulse.

"QUESTION: Is this the letter that Mr. Kowalski received about the Halo patent you were referring to?

"ANSWER: It is. And I can see I had my year wrong. It was 2002.

"QUESTION: So the next time Pulse learned of one or more of the Halo patents after Mr. Bunny in 1999 was this letter in 2002?

"ANSWER: Correct.

"QUESTION: What steps did Mr. Kowalski take with regard to the Halo patent after receiving Benjamin Exhibit 11?

"THE WITNESS: My understanding is that until the second letter, I'm not aware of any communication that happened or any actions that took place.

"QUESTION: Did Mr. Kowalski receive the letter that is reflected here in Benjamin Exhibit 12?

"ANSWER: I don't know that he received the letter.

[13] "QUESTION: Do you have any reason to believe that Mr. Kowalski did not receive the letter that's shown in Benjamin Exhibit 12?

"ANSWER: No.

"QUESTION: What steps did Mr. Kowalski take with respect to the Halo patent after receiving the letter that's shown in Benjamin Exhibit 12?

"THE WITNESS: Mr. Kowalski contacted Victor Aldaco.

"QUESTION: Is Mr. Aldaco a lawyer?

"ANSWER: No.

"QUESTION: What did Mr. Kowalski discuss with Mr. Adalco?

"ANSWER: I don't know.

"QUESTION: Did Mr. Aldaco look into it?

"ANSWER: Yes, Mr. Aldaco did a cursory search of the patent and was skeptical as to

its validity based on his knowledge of prior art that we had and his remembering the part that we had developed 30 years ago that he actually was personally involved in doing tests or something as a young engineer.

"QUESTION: What part was that?

"ANSWER: It was the PE6508 – 60584.

"QUESTION: Did Mr. Aldaco find any other prior art that caused him to be skeptical of the validity of [14] the Halo patents at that time?

"ANSWER: He didn't look for any more prior art.

"QUESTION: So the sole reason for Mr. Aldaco's skepticism about the validity of the Halo patents was the prior Pulse part that he had worked on, PE60584?

"THE WITNESS: No. His statement to me was that he had knowledge of that part and also of several transfer molded parts that Pulse had done over the years in addition to Fil-Mag and Valor, who would all have prior art.

"QUESTION: What were the transfer molded parts that Mr. Aldaco believed were prior art, causing him to be skeptical of the validity of the Halo patents?

"ANSWER: Did I say transfer molded?

"QUESTION: I think you did. I thought you listed some transfer molded parts, some Fil-Mag parts before.

"ANSWER: Mr. Aldaco had knowledge of open header parts that we had done over the years, many of them, in addition to open header parts that Valor and that Fil-Mag did. So it was his belief that we had done several products over the years that show prior art to the claims in the patent.

"QUESTION: Were there any printed references that Mr. Aldaco relied upon at that point in 2002 in [15] thinking that the Halo patents weren't valid?

"ANSWER: Not to my knowledge.

"QUESTION: Do you know whether there was anyone at Pulse that made a conscious decision that it was permissible to continue selling open header surface mounted transformer products after Pulse received the letter, Benjamin Exhibit 12?

"ANSWER: I'm not aware –

"THE WITNESS: I'm not aware of anyone in the company that I know of that made a conscious decision.

(Video ends 9:12:35 a.m.)

MR. MELSHEIMER: Your Honor, that concludes the Plaintiff's offer, and may it please the Court and the ladies and gentlemen of the jury at this

time that Plaintiff, Halo Electronics rests the presentation of its Case-in-Chief.

THE COURT: All right. Thank you, Mr. Melsheimer.

At this point, ladies and gentleman, the Plaintiff having rested its case and there were a couple of matters we took up this morning before moving forward, but the Defendants will now present or begin the presentation of Defendants' Case-in-Chief on behalf of Pulse Electronics. So, Mr. Sipiora, you can proceed with your first witness, sir.

MR. SIPIORA: Judge, according to what we discussed this morning I have a Motion to hand up.

* * *

[42] Q Can you just briefly give us some examples of what those would be?

A [Alan Benjamin] Well, as an example, we've talked about Shasta, all right? So, we've talked about other open header, you know, type products that we could move to. We could move to an open-frame construction; we could move to a pour-fill construction. We could move to a side fill construction. We could even move to a molded, to a transfer molded type of construction.

Q Now, this case was filed in 2007. It's now five years – more than five years later.

A Right.

Q Why hasn't Pulse moved its design of the products that are accused from the accused design to any of these other alternatives?

A Because it's a good design. And, you know, we – like many of our packages, like Shasta, which we've had for quite some period of time and we continue to have, this open-header design we feel we invented in the 1980's and 1990's and we brought it forward. It's a good package, and it's useful, it serves a variety of purposes, and why wouldn't we use it?

Q All right. Let's talk about a couple of letters and switch gears here to letters that were transmitted from an attorney for Halo back in the 2002 time period. Are you aware of these couple of letters we're talking about from 2002?

A I am now.

[43] Q Okay. If you could – these have been admitted, so we can – look to your notebook, and if you'd pull up PTX91, please?

A Okay.

Q This is a letter dated July 9, 2002, from Trial and Technology Law Group to John Kowalski, who was then president of Pulse Engineering. Is it true that Mr. Kowalski was your predecessor?

A That's true.

Q And at this time of this letter, July 2002, what – where were you within the Pulse organization?

A Let's see; July 2002 I would have been over in Carlsbad, California, running Excelsis.

Q Is it the case that, then, you would not have been in the group for this letter, you would not have been a person that would have been involved in any response or consideration of the letter?

A Correct.

Q All right. Now, fast forward to 2010. When was the first time you learned of these letters, this letter and the one that follows?

A The first time I saw this letter and the letter that follows was at – was at the deposition hearing in 2010.

Q Okay. And your deposition.

A Yes, correct.

[44] Q Is that right? Now, you were asked certain questions about this letter, correct?

A Yes.

Q Okay. And one of the issues was did Pulse ever respond to these letters, correct?

A Correct.

Q All right. Now, do you have any understanding whether Pulse did respond to these letters?

A No, I do not.

Q All right. And, in fact, the record is that Pulse did not respond to these letters.

A Okay.

Q All right. Does it surprise you that Pulse did not respond to these letters?

A No. Not at all.

Q Why do you say that?

A Well, from reviewing these letters, it's – you know, had they come to me and had I been in the position or had they come now, I wouldn't have responded to them either.

Q Let's take them one at a time. The first letter comes in; it was July 9, 2002. How do you react to this letter? What's your response to this?

A This – they're trying to sell me something. Right? So, this is the letter that says, you know, they have something for which they want to sell me. So, this is like hundreds of [45] letters I get a week where people want to sell me something.

Q Let's take a step back. In the field of technology, and in particular with respect to patents, is there a known methodology or procedure for putting someone on notice of a claim of patent infringement?

A Sure.

Q Is there a –

A Absolutely.

Q Is there a particular kind of letter that people send that's well known and has a name?

A Yes. You would get a – you would get a what's called a "cease and desist letter."

Q Okay. What –

A And –

Q – what's in that kind of letter?

A You – it's a very standard kind of letter, right? And I might even refer to it like a form letter. It's not subtle. You don't have any guess as to whether this is a cease and desist letter. It tells you that in the heading of the letter. It doesn't suggest that you "may" be infringing on a patent; it doesn't say you haven't completed your work, which I'm reading the second letter, right, where they say they've still got work to do. So, it's very obvious. When you get a cease and desist letter, it's very obvious. And coming from a law group, I have to assume that these lawyers knew exactly what they were doing. [46] So, if they wanted to put us on notice, if they wanted to send us a cease and desist letter, they would. But this is clearly – neither one of these letters are clearly a cease and desist letter.

Q All right. Let's – on the first letter first, what's your takeaway from the first letter of July 9?

A They're trying to sell me something.

Q All right. So –

A And if I look at it and they say, "We have" – "We have some technology; you may be interested; would you be interested in buying it?"

Q All right. In your view, it would have been appropriate not to respond to that letter.

A You know, I – you can certainly make an argument that you could send back a nice letter that says, you know, "We've received your proposal; we've looked at – we've looked at our own needs and we don't have need for it." But, you know, like I said, I get lots of letters like this every week. So, I don't – I wouldn't necessarily feel the need to respond back. I could have, but I wouldn't necessarily feel the need to.

Q If this had been a letter of the type that you described as a cease and desist letter, is that the kind of letter that you would expect a response from?

A Absolutely.

Q And is the kind of letter that you would, as a business, [47] as Pulse, in your experience there, would have responded to?

A Yes. Certainly.

Q Okay. Let's go to the second – PTX092, please.

A Okay.

Q Now, this is the second letter in the sequence, and, again, the evidence is that there's no response to this letter.

A Right.

Q From your perspective as a representative of Pulse here, do you consider it appropriate not to respond to this letter?

A Even more so than the first one.

Q Why do you say that?

A Well, because this letter is – you know, in this particular letter they are saying that they haven't yet reached any conclusions; they haven't – you know, they're still – there's a lot that they haven't done here. So, I read this letter and say they have not yet done their homework.

Q And when you say that, can you specifically point to where you're getting that in the letter?

A Sure. In the second paragraph, the third line, starting: "Halo has not yet reached any conclusive determinations as to whether your company's products are covered by its patents."

Q Would you ever see that kind of a statement in a cease and desist letter that was accusing you of infringement?

A Never.

Q All right. Why not?

[48] A Because they would come flat out and say, "We believe that you are infringing on our patents."

Q And what do you infer from this kind of a statement in a letter that comes from a competitor?

A Well, as I said, it looks to me like they have not yet done their homework. They haven't done their homework. So, I – I would look from this either one of two things. Either they don't want to go through the trouble, they don't want to go through the expense, they don't want to – for some reason they just simply haven't done their homework and they're hoping that we would do it for them; or, it's possible that they did their homework and they don't like the answer. Right? The answer is not a good answer for them. And, so, they write this letter in the hopes that we will, you know, give them some information or give them some money or give them something, because they don't like what they saw.

Q How difficult, in this time period, 2002 – how difficult would it have been for this law firm or for Halo to have obtained a Pulse part of the type that's been accused and evaluate it to determine whether or not the product's infringed?

A It would have been very easy for them to get those parts.

Q Why is that?

A Because they would have been available from a number of electronic distributors, and you could

have – you could have [49] fairly easily gotten parts. There's been cases that we've had to go to some fairly extreme measures to get parts. That's not one of them. This – these parts would have been easily available in the market.

Q We can take that down, please. Thank you.

With respect to this notion of receiving cease and desist letters, you mentioned earlier that you have received cease and desist letters on occasion in the past. Is that right?

A True. Right.

Q And has Pulse also sent these type of cease and desist letters?

A Yes, we have.

Q All right. Is it the case that when Pulse engages in negotiation or discussion relating to a incoming cease and desist letter that it actually tries to engage and resolve matters?

A Yes, we do.

Q At some point in time did Pulse receive a cease and desist letter from a company called Mirada (phonetic)?

A Yes, we did.

Q When was that? What time period is that?

A That would have been – this is a guess – probably two, three years ago.

Q Okay. And did the letter say or accuse Pulse of . . .

* * *

[52] filed the – we filed the case.

Q Did you, in fact, then, as a result of this filing the declaratory judgment action and the complaint, which is 556, resolve the matter with Mirada?

A Yes, we did.

Q What was the end result?

A We ended up paying them a fee.

Q Okay. So, you licensed their technology.

A Correct. We ended up licensing their technology.

Q Okay. We can take that down, please.

You're aware in this case that Halo has accused Pulse not just of infringement, but of willful infringement. Are you aware of that?

A I am aware of that.

Q And, you know, in a shorthand, willful infringement is a knowing and intentional violation of the rights of someone else in the context of patent infringement. Do you understand that?

A I do.

Q And initially the complaint alleged in this case and the allegations alleged that Pulse had willfully and knowingly infringed six Halo patents.

A Right.

Q And now today, in this Court, the jury is being asked to consider the few that are left –

A Right.

[53] Q – and an allegation that Pulse knowingly, intentionally is violating the rights of Halo.

A Right.

Q What is Pulse's reaction to that accusation of willfulness?

A We disagree vehemently with that accusation. All right? At the end of the day, we firmly believe that we have invented this technology, and we did it ten, 15 years before these patents in question. And, so, the notion that we willfully infringed upon their patents, we don't believe that they should have patents. We believe that these patents are invalid. We hope to show you enough drawings and testimony that you will look and that you will agree with that.

Q You are aware that in this case Judge Pro had made an earlier determination as to one product, as to one claim, that there was infringement. You're aware of that?

A I am aware of that.

Q How has that impacted or has it impacted Pulse and your thinking about this case, if at all?

A Well, I also understand that the judge was quite clear that it is up to the jury to determine the validity of the patents. And if the patents are not valid, there is no infringement. You cannot infringe patents that don't exist.

Q One last point. We've heard in the opening, and I think we're going to hear in the closing, that a number of companies [54] that are competitors of both Halo and Pulse, including E&E and Transformers, Inc., and Bel Fuse, they've taken licenses. They've taken licenses under these Halo patents and they're – and receive payments of royalties. And the question being raised is, if they're willing to do that, doesn't that show that Pulse is recklessly disregarding the rights of Halo? Why is it that you're sitting here today and Pulse has not sought and taken a license with respect to these Halo patents whereas some of these other companies have chosen to do that?

A Right. I understand that some people have – have chosen to do that. And, quite frankly, I don't – I don't know the terms of the settlements, and I don't know the circumstances for those companies. I do know that in this case the other side is effectively not paying for their legal costs, because they have engaged with a contingency arrangement. And these cases are expensive. Right? This case has cost millions upon millions of dollars. And some of those

companies that you've just described are quite small, and they may not have had the capability to defend themselves, and they may have been forced to settle. Now, fortunately, Pulse has had the financial wherewithal to be able to defend itself in this case. But it's expensive. It's really expensive to fight these things. And it's been a burden. It's been a hardship on the company. It's – it's a lot of time and effort.

Q Well, why has Pulse decided to do this? Why is Pulse [55] expending these kind of resources, this time, these employees' time? Why is Pulse here today contesting these allegations of willfulness and infringement?

A Well, because – because we believe – we believe deeply that we invented this technology. And we believe the people that I talk about have made tremendous contributions to this industry and specifically to this packaging style that we invented this, that we worked together with Western Electric, we worked with Rockwell, we worked with others, and we invented this package. And sometimes – sometimes, in spite of the fact that it's going to be expensive, you just have to defend yourself. Right? You have to be able to fight for what you believe is fair and what you believe is right. And this is one of those cases.

MR. SIPIORA: Mr. Benjamin, no further questions. Thank you.

THE WITNESS: Thank you.

THE COURT: Thank you. Mr. Melsheimer, you may cross examine.

MR. MELSHEIMER: May I obtain the flowchart, your Honor?

THE COURT: Sure.

* * *

[130] from other groups to work and solve problems?

A [Victor Aldaco] That is correct, yes.

Q Would you have a manufacturing representative as part of the problem solving if you had a design problem?

A That is correct.

Q And how long has that been the case at Pulse?

A To the best of my recollection I would say since I joined San Diego that has been the practice.

Q You've been with the company for 38 years. The company makes thousands of products. Are you generally familiar with the kinds of products and particularly transformer products that have been made by Pulse over the course of your career there?

A I consider myself to be very, very familiar with the products, as I see them in production, I see them inside, I see them as a quality engineer, and interacting with customers, so yes, my answer is yes.

Q And is it the case that during the entire time that you've been at Pulse for a 38-year period approximately that Pulse during that entire time, in addition to making other parts, always has manufactured, designed, and engineered transformer products?

A Amongst other products, yes, it's always been transformers, ever since I can remember since I joined in 1974.

Q All right, I'd like to you talk to you now about a product [131] that was developed by Pulse, a number of products that were sold for a company called Western Electric. Are you familiar with that?

A Yes.

Q Now, the products that we're talking about, are you familiar with their transformer products?

A Yes.

Q Were there a number of products that were designed and manufactured and sold for Western Electric in the time period of the 70s?

A There were six products, if I can recall, yes.

Q All right. Do you have personal knowledge relating to those products?

A Yes.

Q What is the basis for your knowledge relating to the Western Electric products?

A Well, I was part of the group that worked on building the first samples and I was responsible with (indiscernible) to build products, check the samples, do electrical inspection, do visual inspection, before the product was shipped to the customer to get initial approval before we get (indiscernible)

Q Approximately what time period are you talking about with respect to your involvement with Western Electric products?

A That was from the beginning of 1975.

THE COURT: I'm sorry, '75?

[132] THE WITNESS: '75.

BY MR. SIPIORA:

Q You, I believe, are familiar with Western Electric, can you tell us briefly, tell the jury a little about your knowledge of who Western Electric is as a customer?

A Well, it was the manufacturing side of what now is AT&T. They used to build every single phone (indiscernible) in the United States.

Q So a big customer?

A A big customer.

Q So it was AT&T, Bell Systems, right, and they had all the phones in the United States?

A Yes.

Q And then there was a divestiture in the 1980s by virtue of a Court order?

A Yeah, they broke into the Baby Bells and now we don't know much about them, but we know about AT&T.

Q But before that in the '80s when that happened, all of the phones in the United States, if you had an AT&T phone or an AT&T system, they were from Western Electric, correct?

A Correct, yes.

Q All right, so it would have been every household that had a phone?

A Anybody who had a phone, it was a Western Electric. Even the public phones were Western Electric. (indiscernible) [133] surprised to see some of those phones still have Western Electric (indiscernible).

Q And the products that we're talking about, they were designed and developed to be sold to this company that we're talking about, Western Electric, correct?

A That is correct, yes.

Q All right. So if you could, please, turn to your notebook, Exhibits 575 through 580, and just briefly let us – after you've had a chance to look at these, make sure you're familiar with these, are these – tell us what these are.

A These are the actual manufacturing drawings for the six (indiscernible), yes.

Q For the – I'm sorry, for the what?

A For Western Electric. These are the six drawings for the Western Electric transformers.

Q All right. Now, are these drawings that were kept by Pulse in the course of its business?

A Yes.

MR. SIPIORA: All right, your Honor, I move for the admission of 575 through 580.

THE COURT: Any objection to 575 through 580?

MR. MELSHEIMER: None at all, your Honor.

THE COURT: All right, thank you. Those will be received.

(Defendants' Exhibits Numbers 575, 576, 577, 578, 579, and [134] 580 were received in evidence)

BY MR. SIPIORA:

Q Mr. Aldaco, each of these sets of drawings, 575 through 580, relate to a different Western Electric part, isn't that right?

A That is correct.

Q Is it the case that from a mechanical point of view, a physical point of view, that all of the designs are essentially the same?

A I would say from a mechanical point of view they are all identical.

Q And if we talk about the package, which we know is the issue here in this case, the package for the transformers, is it the case that all of these designs, 575 through 580, they're all the same package mechanical design?

A Yes, they all use exactly the same open header, they all have multiple transformers, they all have silicone to retain the coils, yes.

Q All right. So –

A The same basic mechanical construction, yes.

Q So if that's the case, why were there six actual parts? Why were six separate parts made if the same mechanical design was going to be used?

A The basic difference between them is electrical. Some of them have two wires wrapped around the toroids, some have three [135] wires wrapped around the toroids, some may have ten wraps around, some may have eight, some may have fifteen. So it's just basically electrical differences.

Q So for purposes of our discussion today would it be fair if we're going to talk about the open package or the mechanical design that we could pick one of

these and it would be a good exemplar, it would apply to all six of them?

A Yes.

Q All right, if you could go to 580.

MR. SIPIORA: And if we could publish that to the jury, 580.

THE COURT: Donna, is that shifted over to –

THE CLERK: Yes, sir, it is.

THE COURT: Okay, great.

BY MR. SIPIORA:

Q Mr. Aldaco, we've seen a couple of these kind of in passing during the course of the trial to date. What I'd like for you to do, if you would, please, is to walk us through 580 –

A Okay.

Q – so that we can understand what – to begin with there's eight pages, is that right?

A Yes.

Q Okay. And how many drawings are actually here?

A What's it's actually – just to explain it better, the [136] drawings are actually twice as big as one of these pages, so every two pages is one page of the actual drawing.

Q So just as an example, the first page of Exhibit 580 when you're looking at it is the left half of the drawing and the second page of the exhibit is the right half of the drawing, is that right?

A That is correct, yes.

Q And if you proceed through 580, or any of these other exhibits, you'll find eight pages –

A Yes.

Q – comprising four drawings, one drawing reflecting two pages, the next two pages another drawing, and so forth, is that right?

A That is correct, yes.

Q Okay, so it's hard to see. If you could just go to the left, let's start at the left. What I'd like to do is walk through the left-hand, let's start with the left-hand side, and blow up the top, and if you could just tell us what we're seeing here, just explain what this is. How does Pulse maintain this record, what does it show?

A Well, first thing, what you're going to see on the first page right on top, you'll see who the customer is, which is Western Electric. You will see the part number, which is PE-60589. Then down below you look where it says rev, basically that is the revision level, which is letter F, and [137] the date of the revision F, which is September 10, 1980.

Q By the way, you've looked at these drawings, is the latest date on any of these drawings September of 1980?

A That's the latest revision of the drawings, yes.

Q Okay. And some of the dates go back to how early?

A They should all go back to 1975, which was the original date.

Q Okay, we'll see that again. Let's go – explain what's next. The list of materials; what's that?

A So as you go down you'll see what is called the list of materials and you're going to see, what is it, seven items, Number 1 being the wound coil, WC stands for wound coil assembly. Then the Number 2 shows the plastic open header. Number 3 shows the –

Q Well, let's just stop there. That's an important point

A Okay.

Q Number 2, 14 pin header case; what does that refer to?

A Yes.

Q What is that exactly?

A That is an open header.

Q Okay.

A It's an open header with 14 pins.

Q All right. Very good. What's number 3?

A Number 3 is – it says Sylgard, which is actually the brand from Dow Corning for silicone, their silicone material. [138] Item number 6 is the solder that is used to solder the wires to the posts. Number 7 is the ink that is used to mark the country origin part number on the top of the unit and the last two items are fluxes that are used to help with the soldering of the wires for the posts.

Q So, is this effectively the list of materials you need to be able to build one of these things?

A Yes, exactly. That's what you need to build one of these products.

Q All right. If we could, Mr. (indiscernible), if we could just – there you go. Thank you.

A So, if I continue down you will see it's a list of fixtures or tools or procedures that will be used or required to help manufacturing people to build the part.

Q All right.

A If we move to the next page, which is actually the right half of the page 1 of the drawing, you have on top some general notes. We have some original drawings that are required to build the product. And in the middle you'll see a block that shows the different revision levels that this part number has gone through ever since revision A, which was released in

1975, and then up to the latest revision F, which was released in September 1980.

Q Right? So – there you go. If you could – so, down below the red – just so we're clear, revisions refer to what? [139] When you look at a drawing like this, you're talking about revisions. What are we talking about?

A The engineering provisions or changes. Something changed on the drawing.

Q All right. So, the initial drawing A, that would have been the initial development of the product. Is that right?

A Yes. Normally every part that we release when it's a formal release it goes to revision A. That is the first revision. Means it's the first time that the part went to production.

Q Okay. And then subsequently, B, C, D, those are revisions to the design. Is that right?

A That is correct, yes.

Q And it says – you see, and is that engineering change notice?

A That is the engineering change notice and it has the number and it has a record who approved and when was it approved.

Q Okay. And the highlighted text here is the date. It's hard for me to see it, but –

A Those are the release dates for each of those engineering changes.

Q And if you go a little bit to the right that you can see maybe better, Mr. (indiscernible), just to the right of that, you can see a little better some dates. There you go.

[140] A After the first one will be – looks like May 19, '76.

Q '76.

A Yeah.

Q Okay. And if we could push that back in, please, and then go down to the block in the middle there. You see it says drawn?

A Yes.

Q And it says Pacho, I think. Who's Pacho?

A Yeah, Pacho is better known as Aurelio Gutierrez.

Q Aurelio Gutierrez?

A Aurelio Gutierrez, yes.

Q Is he an employee of Pulse?

A He's still an employee of Pulse.

Q And down below that, if you could identify the next. It says – well, tell us what it says.

A It's actually Art Proctor. His real name is Robert Proctor. He was the head of engineering, the design engineering group back when.

Q And to your knowledge, what was Mr. Proctor's role in this particular design of the product?

A He was the designer. He was an electrical engineer. He's deceased now, so he was the electrical engineer responsible for the electrical design of the product.

Q Was that date in 1975?

A Yes. I believe it's like 11/21st 1975.

[141] Q This product, Western Electric, you can see the name, was this product made for other customers?

A No. No, normally we have two types of product. We build what we call custom products, which are made for one specific customer or we have catalogs which are offered to all customers.

Q And is this part, the Western Electric parts we were talking about, these were custom made in conjunction with Western Electric. Is that right?

A They were. Yes, sir, custom made. And if you – because if you go back to the first half of the page, right on top says customer Western Electric. So, this was specifically done for Western Electric, yes.

Q And would that have been done in conjunction with Western Electric to develop this part?

A Correct.

Q Okay. All right. So, that's the first drawing. Can you go to the third page, which is the left hand side of the second drawing? If you'd briefly tell us what's shown there.

A This page shows actually is all of the – some of the winding information and there is – you see there is a note that says "CWC1-60589 for latest design." Basically, those one (indiscernible) instructions were changed or replaced during the revision F of the drawing for a stand alone drawing. But this is the original winding instructions that shows how many [142] wires are wrap around the core, what wire is used, the color of the wire, how many turns, and it shows a schematic which is – what you see on the top is the schematic which how many wires are wrap around the core.

Then in the center you see the round thing is the actual ferrite cord with the wire wrapped around the core showing their red natural colors. At the bottom is a specific winding instructions for the winding operator which tells them how the part should be wound.

Q Okay. And that circular object we looked at, that's the toroid that's the center of the – that is the transformer after it has been wound.

A That is the transformer coil, yes.

Q Okay. If you could, go to the second half of this drawing, then, which is the right half of the second –

A So, this one shows the actual – the plastic open header with the transformers loaded into the cavities. The wires are routed and wrapped around the solder posts. Then on the side there's – then there is a side view that shows the pins molded into the header. It shows the position of the transformer. It shows in the center which is label it as stand off, show's the plastic stand off on the center. And that shows the elevation of the pins and how the wire is wrapped around the solder posts.

Q The orientation that we're looking at this, you see the [143] open header casing, from what perspective is that being viewed?

A Well, the left side is the bottom view. It's looking at it from the bottom.

Q Would that be equivalent to a view looking at it from this direction?

A Like that. Exactly. So, it's looking at it from the bottom, yes.

Q And if you look at those circular rings there, those are the toroids?

A That is correct.

Q And the wire wrapped around.

A Yes.

THE COURT: For the record, the model you're holding up, that bears what exhibit number?

THE WITNESS: 499.

THE COURT: 499. Thanks.

MR. SIPIORA: Thank you, your Honor.

THE WITNESS: And the figure on the side is actually is the same package but look at from the side.

BY MR. SIPIORA:

Q And that would be the side view of said stand off. That would be looking at it from this location.

A Exactly. Yes, looking at it from the side, yes.

Q And it references the stand off. It also references silver. What's that a reference to?

[144] A That's references to the silver that is used to retain the coils into the cavities of the open header.

Q All right. And then down at the bottom it says assembly view. What does that refer to?

A Well, basically that assembly view refers to those two figures on the top and then down below there is the specific instructions to the assembly operator on what sequence to follow to build this transformer.

Q Okay. Great. Let's move along, then, quickly to the other two, because I think there'd be less discussion on these; the 5th and 6th pages in, which were the third drawing.

A This will be the left half of the third page of the drawing and this refers to all of the electrical testing that is to be done in production and by quality before the product is shipped to the customer. So, that's to make sure that we have the correct number of wraps around the core; that the wires are connected to the correct pins or terminals. It shows that electrically the part is functioning, it's working, and it's (indiscernible) what the customer wants.

Q Is this the kind of thing that you were engaged in when you were working with the product in '75 to '77 time frame?

A Correct. I was responsible to train operators on how to test the product and if we continue with the next page, I was also responsible to train the quality inspectors on all of the mechanical evaluations in visual and mechanical inspections [145] that needed to be done to the product before the product was shipped to the customer.

So, if I move to that page, what it shows the first square on top it actually shows that one is a top view. You're looking at it from the top is actually where we have the part number; we have where was the part assembled; and which week of the year the part was built. Then we have a schematic that shows what wires are connected to what pins or terminals on the header.

Q So, the top you were talking about is the left hand side where it says 2656N. That would be looking down at the top?

A You're looking at it from the top, yes.

Q And down in the middle there, where are those views that are shown?

A Those are side views; one from the side of the terminals and the other side from the side of the stand off.

Q Okay. Very good. And let's go to the last one, which are the last two pages of 580. Can you briefly tell us what's shown here?

A This is a stand alone joint that's just for the winding. This is a change that was done. If you look at the revision labels of the top level joints as revision F, this was added to the bill of materials which is a separate drawing.

Normally this happens when you're building a product in very high volumes you cannot afford to have the winding [146] operators on the line because you have too many. So, you have to create a separate drawing so that you move those winding operators to a separate side – separate place in the factory and they can actually build those transformers, those coils, bring them into the production lines.

So, this is what it is. It's the winding instructions. It shows again on the top shows how many wires, what colors, what size, and it shows how many turns and whenever you wrap around the core on the next half the right half of the drawing it shows in the middle shows the core with the wire wrapped around the core.

On the top it shows the revision level of this drawing. On the center portion shows the bill of material, what is needed to build this part. Basically it's item 1 is the core, item 2 and 3 are the red and green wires. Then on the bottom we have the title, which is what it is – a description of what it is, which is a toroid coil sub assembly. The part number that you see 1-60589 and in the center is the description as to who participated on the design of this part.

Q Very good. Mr. Aldaco, based on your personal knowledge, did Pulse manufacture these parts, these Western Electric parts, during the time period 1975 to 1980?

A That is correct, yes.

Q And how do you know that?

A Well, first of all, is that we would not make any changes [147] to a drawing if the part is not in production. So, just by looking at the drawings we made at a minimum we built the product from 1975 to 1980. That was the last time we made a change. So, that shows that the part was in production.

Q All right. Do you have personal knowledge that that part's actually being in production?

A Yes. I was at the factory that was building the product.

Q What kind of volume are you aware of having been manufactured with respect to these parts?

A I don't think I can give you specific numbers. All I can say is we have people back when in Mexico people used to work 48 hours a week. So, we have two shifts of people working six days a week, 48 hours a week, two shifts and we were doing this for at a minimum five years.

Q Based on that knowledge and the volume of production, approximately how many parts – can you approximate how many of these Western Electric parts were manufactured and sold by Pulse to Western Electric during the period '75 to '80?

A I don't think I could give you a specific number. That would be lying. And I'll say what I know is that we built hundreds of thousands if not millions of parts.

THE COURT: All right. This would be a good time to take our luncheon recess. Ladies and gentlemen, we'll be in recess until 1:25. That's an hour and 15 minutes. During this luncheon recess, please remember that admonition. Refrain from . . .

* * *

[155] THE COURT: – your corporate representative, I think.

MR. SIPIORA: Absolutely. Oh, absolutely. The only thing is if we have a half an hour at the end of today, we might –

THE COURT: Yeah, okay. I think – we may be able to stay a little late.

(Jury entered the courtroom)

THE COURT: All right. Have a seat everybody. All members of the jury are now present. With that big lunch you ate, I'm going to keep my eyes peeled to make sure none of you start to dose off but I hope you enjoyed it. That's – I was telling the members of the jury this morning – they asked about bringing food and when we have a short trial, a bank robbery for two days or something, they don't even get to know each other. But whenever you get into a second week, the jurors tend to bond and pretty soon, they're bringing in food and cheesecake, and stuff I think. Even Donna can attest to how good the cheesecake was I think, so. All right. All right, you may proceed, Mr. Sipiora.

MR. SIPIORA: Thank you, your Honor.

DIRECT EXAMINATION (CONTINUED)

BY MR. SIPIORA:

Q Good afternoon, Mr. Aldaco.

A Good afternoon.

[156] MR. SIPIORA: If we could pull up please DIM 13.

BY MR. SIPIORA:

Q Mr. Aldaco, this a list of possible features in a transformer part package. Can you see that?

A Yes, I can see that.

Q And what I'd like to do with you is, the features on the left and then there's a box to the right which says present and there's a question mark. What I'd like to do is walk through with you exhibit 580 which is the Western Electric Part and discuss with you what features of this transformer package are present. And it would actually be, you know, you could check the box. All right. So if we could start with –

THE COURT: Before we get into that, let me interrupt for just one second, Mr. Sipiora. Ladies and gentlemen, this is something that I was just addressing with counsel before you came in and wanted to make sure that you understood. What the witness is now going to go through is not an analysis by the witness of the patents, the three patents-in-suit. He's testifying as to features present or not present in the Western Electric Drawings that you heard about before lunch and wanted to make sure that it was clear to the jury that the witness is not offering his analysis of the patents-in-suit. That's the province of you as the jury and of course, will be the subject of testimony as it has already of experts and of future experts.

[157] MR. SIPIORA: Thank you, your Honor.

BY MR. SIPIORA:

Q All right. So, if you could start on the first of 580. We'll just move back and forth between these. And the very first page if you could. And focus on the

very top, part number one, wound core assembly. Mr. Aldaco, wound core assembly, would that qualify as a wire wrap Toroid?

A Yes.

Q Okay. And is that depicted in the Western Electric Drawings?

A Yes, it is.

Q Can we confront it where that is?

A Can you go up to –

THE COURT: Donna, I think you need to turn the audio on. I think it may have turned off. There we go. Thank you. Go ahead, sir.

BY MR. SIPIORA:

A All right. So if we go to page three. Next page.

Q Next page.

MR. SIPIORA: And blow that up.

BY MR. SIPIORA:

A So right there. So you can actually see it. It's on the center. Those two round.

Q Yeah. Can you – I don't know if you can indicate in the screen. I don't know if that. Okay. All right. And those [158] are Toroid's, is that right?

A That's our Toroid Transformers.

Q Okay. All right. And they're wired up Toroid's?

A Yes, Sir.

MR. SIPIORA: All right. Now – and if you could go back to that chart which is DIM 13. Oh, we're going to have an issue.

BY MR. SIPIORA:

Q Do you know how erase, Mr. Aldaco? They didn't teach you that one, I know.

MR. MELSHEIMER: I think if you press the left hand, bottom left hand corner. Mr. Aldaco can clear it.

THE COURT: Donna, you can. I think –

MR. MELSHEIMER: The very bottom.

THE COURT: Yeah. He's got his finger in the right place. Go ahead and clear that, would you? There we go.

MR. SIPIORA: Maybe we'll just stay away from that. We'll just use – use words.

BY MR. SIPIORA:

Q All right. So, wired up toroids was at the bottom. We put a check there, as reflecting it being in the Western Electric. Okay. All right. The next one I want to focus on was within silicone's right next that. If you can go back to 580. Are these wired up toroids in the Western Electric part within silicone?

[159] A Yes.

Q And where would you find that?

A You will see it in this area around and that dotted line shows the silicone.

Q Okay. And is that term Sealguard referring to that?

A Excuse me.

Q The term Sealguard, you see that?

A Yes. Sealguard is the brand name from Bell Horn for silicone.

Q All right. And that's reflected if you go back to the first page of this exhibit.

A Yes. That should be item number two.

Q Item two.

A Item three. It should be item three on the first page. It should be this item. Yes.

Q Okay. Now these Toroids are actually within silicone, they're carried within silicone; is that right?

A That is correct.

Q All right. And how exactly are those Toroids kept in place in that frame, the assembly?

A Well, they – the silicone is used to retain the coils in the open pair.

Q All right. So can we put a check on that box then, if you go back to DIM 13? Okay.

A Yes.

[160] Q All right. If we can move to molded pins. Did the Western Electric Parts, do they have molded pins?

A Correct. Yes.

Q All right. Can you show us where you find that?

A So if you go to the same page that we were before.

Q All right. As the drawing?

A Yes. So there it is – are the molded pins.

Q Okay. All right. So we can check that box as well?

A Yes, correct.

Q All right. Were there notched post? Notched solid post in the Western Electric design?

A Not on the Western Electric, no.

Q Okay. So we can't check that box?

A Cannot.

Q Okay. Was there an open construction?

A Yes, correct.

Q All right. Can you go back and show us where the open construction is shown?

A This same view shows you the header. Look up from the bottom and you can see – you can actually see. This already has a silicone so you can see all of the elements. You can see the wires. You can see the transformer so it's an open construction.

Q Okay. So we can check that box?

A Correct.

[161] Q Now with respect to parallel solder post. Are there solder post that are parallel to the side walls in this design?

A Yes, that is correct.

Q Can you show us where that is?

A If I look at this, this ought to be a post. They go parallel to this surface. So it does. Yes.

Q Okay. So it does have parallel solder post?

A Correct.

Q You can check that box?

A Yes.

Q You're making a mess of this drawing.

A I know.

Q Can we –

A Sorry.

MR. SIPIORA: Can we reset the (indiscernible)?

BY MR. SIPIORA:

Q I think we're going to stop the marking and let's just talk because it looks like one of my little kids got loose. All right. Did the Western Electric part have a standoff or standoffs?

A That is correct. Yes.

Q Can you show us where that was present?

A Same page, so this is standoff. Each of those are standoffs. Yes.

Q Okay. Is there actually a reference on the right hand [162] side to the word standoff?

A Yes. So you can see it right there.

Q Okay. So can we check the box that the Western Electric part had standoffs?

A That is correct. Yes.

Q All right. With respect to end solder post. Did the Western Electric park have an end solder post?

A I'm hesitating because it depends on the definition of what end solder post is. In the case of – if we go back to the same page that we were before, this is the section that I will call the end solder post, which is where the water is wrapped around the post and solder.

Q Okay. So would you character – so, I'm going to assume it's solder post, correct?

A Yes.

Q All right. Would you say it's an end solder post? What's your view on that?

A I will say it's an end solder post. Yes. I guess based on the definition.

THE COURT: What does – I mean, by end, you mean the end of the package or does it have some other function that it serves?

THE WITNESS: Well, yes Sir. That's what I mean when I said it depends on the definition. It's this is the end of the post when I look at it from the bottom. So from the bottom [163] to the top is the end.

THE COURT: All right.

THE WITNESS: Okay. On the surface mount, if I were to – can I mark on this drawing?

THE COURT: Sure.

THE WITNESS: If I were to do a transition from this part to a surface mount, I would actually bring this pin this way and make a gold wing in which case I eliminate this portion of the pin and this there has become the end post.

THE COURT: All right.

THE WITNESS: It depends on your definition so.

BY MR. SIPIORA:

Q All right. Could we place a question mark around "inside of post" for now just depending on how you define "inside of post?"

A Yes.

Q Is that fair?

A That's fair. That is a fair, yes.

Q Okay. And there are two other – if you go back to that list, there are two other items that are identified, two other features. You've got a notch-sided post, we have a no check, in the inside of post we have a question mark. There are two more. Surface-mount package. Is this a surface-mount package?

A No, this is a through-hole package, so none of those two look like it.

[164] Q All right. And a surface-mount lead, that also would not be present; is that right?

A Would not be present, no.

Q Because this design was a through-hole design; is that right?

A That is correct, yes.

Q All right. So to sum up with respect to the Western Electric part, looking at the features that we've been describing, it has wire-wrapped toroids that are within silicone, it has a standoff, it has

parallel solder posts, it is open construction with molded pins. Is that accurate?

A That is very accurate, yes.

Q Okay. Now, this issue of – on –

MR. SIPIORA: Will you take this down, please.

Q This issue of through-hole construction, the jury has heard a lot about it, I'm not going to revisit it, but was it the case that in the time period of the '70s, that the predominant method of affixing the package to a printed circuit board was the through-hole method?

A That was the predominant technology, yes, in the '70s.

Q And that's when this part was designed?

A Correct, yes.

Q Now is it the case that you observed as someone in the industry there was an evolution from through-hole to other designs?

[165] A There was an evolution in the '80s, yes.

Q All right, and what –

A Some of our customers started transitioning from the through-hole to the surface-mount technology, yes.

Q And the jury's heard, just but briefly, is moving that transition from through-hole to surface-mount involves a lot?

A It is actually changing is on a through-hole part. Basically it means you have straight pins that go through a hole on the PC board and the parts are soldered on the bottom of the PC board. When you're talking about a surface-mount part, it actually has a – the leads form what we call on a gull wing that they're designed to sit on the surface of the PC board and they're soldered on the top of the PC board. So that's basically the main difference. Package, electrical, everything is the same. It's just whether the pins are straight and go through the hole or they sit on the surface of the PC board. That's the basic definition.

Q All right, so it's been used as an example before, but if this is a printed circuit board (indiscernible) the through-hole the soldering go underneath –

A It's on the bottom.

Q – in this design (indiscernible) it still on the top, up here.

A That's correct, yes.

Q So, was it the case that Pulse had a number of through-[166]hole products through the 1970s, such as Western Electric?

A Correct.

Q And did Pulse develop surface-mount technology and use that for mounting of transformer products and packages in the '80s?

A That is correct, yes.

Q And did, in fact, Pulse have products that were through-hole design that transitioned to surface-mount when the technology evolved?

A Yes, we actually had offerings for the same electrical part in both through-hole or surface-mount.

Q Well, let's talk briefly about some of the surface-mount technology. Before the 1995 date of the filing of the Halo patent, did Pulse have a number of surface-mount products that were on the market and available for sale?

A That is correct.

Q All right, so let's pull up – briefly let's talk about a few of these, 526 – which I might – well, I offer 526. It's the Rockwell.

THE COURT: Hold on just a second, is there any objection to 526? I don't know if that's been previously received.

MR. MELSHEIMER: No, your Honor, there's not.

THE COURT: All right, 526 will be received then.

(Defendants' Exhibit Number 526 received in evidence)

[167] BY MR. SIPIORA:

Q So, Mr. Aldaco, if you could turn to 526 in your binder, and we have it on your screen as well. Are you familiar with this part?

A Yes.

Q This is the Rockwell PE64309?

A Correct.

Q All right. Is this – what's the date of this product, or this drawing say?

A If I look at it, it is – it was signed by Mike McWilliams (phonetic) who was the electrical designer, and approved by Sao Paulo in September 1st, 1986. I believe that what it says here. Actually if I look at the revision A, revision A on the upper block and the middle block, on the left – on the right side, revision A says July 21st, 1986.

Q All right, are you familiar with generally with the Rockwell part?

A Yes.

Q You were involved in testing and qualifying this part when it was being developed?

A I don't think so.

Q Were you aware of its development when you were at Pulse?

A Yes.

Q Who was the person at Pulse with the most knowledge about this Rockwell 64309 part?

[168] A It's Jim Lint who was a mechanical engineer.

Q Okay. Is this a surface-map package?

A Yes, it is. And actually it says right above the part number on the bottom, right corner, it says, "surface mount Pulse transformer."

Q Okay, all right. So let's, if you could, go to 644. We need to identify this first.

A Six forty-four is for a surface-mount transformer, part number PE65793.

MR. SIPIORA: Your Honor, I would move for the admission of six – DTX 644.

THE COURT: Any objection to 644?

MR. MELSHEIMER: No, your Honor.

THE COURT: Thank you, that'll be received.

(Defendants' Exhibit Number 644 received in evidence)

BY MR. SIPIORA:

Q So Mr. Aldaco, is this a surface-mount transformer product?

A Yes, as described in the title, it's a transformer surface-mount technology – surface-mount, yes.

Q Is this an open-header design?

A It starts as an open-header. What you see on page number 2 – actually what you're seeing, you're seeing an open-header construction.

Q Right.

[169] A But, it's eventually encapsulated with epoxy.

Q And this design, what's the date of this drawing?

A This is December of 1991.

Q And I notice if you look at – in the drawing at page 2, there's a reference to step nine.

A Step nine is actually – it's one step in the manufacturing process where the leads are form in a gull wing configuration.

Q Referring to that gull wing, can you describe in this time period, the 1991 time period, what are gull wings and how were they used by Pulse?

A Well, they were used on all of the surface-mount products, which it was also the preferred

choice by customers. We used to have what we call the gull wing, which is what you saw on the drawings, which actually has this kind of shape, and they used to be what we called the "J" lead, which is formed like a "J" underneath the package. But this was the predominant –

Q In the Exhibit 499, is this an example of a gull wing surface-mount?

A Yes.

Q Is that what we see in this exhibit DTX 644?

A Yes. If you look to page number 3 on the drawing, it's going to be more clear where it shows the gull wing forming of the pins.

Q Okay. Were you involved in the development or testing in [170] any respect – with respect to this particular product, the part depicted in DTX 644?

A Correct, yes. As a matter of fact, if you go to page number 1 and you look at the block where the signatures are, you'll see my signature. I was the senior quality engineer when the product was developed.

Q Which one of those is yours?

A This one (indicating). That's me. We're looking at it, that's my signature.

Q All right, the date's 12-19-91; is that right?

A Yes, correct.

Q If you could turn to 656, and if you could identify that for us.

A Six – this is a catalogue or datasheet that is used to advertise our products to the world.

MR. SIPIORA: Your Honor, I would move for admission of DTX 656.

THE COURT: Any objections to 656?

MR. MELSHEIMER: No objection.

THE COURT: That'll be received.

(Defendants' Exhibit Number 656 received into evidence)

BY MR. SIPIORA:

A So it describes surface-mount transformers, basically the part number that we sold before, it's listed as part of this part family.

[171] Q Now, that's the PE65793?

A Correct, yes, that is the second part number on the list.

Q And this reflects the fact that it was offered for sale?

A Yes.

Q Can you date this particular products material?

A Yes, if you move to page 2, bottom right corner, right underneath the 906-32, you will see December, 1991.

Q Okay, so we surface-mount, gull wing, Pulse Transformer Products, 1291, and this is backup of the drawings we just saw?

A That's correct, yes.

Q If you could turn to 631, please. Could you please identify this document?

A This is again another catalogue that gets wide distribution worldwide, available to customers and potential users for a – yeah, it includes a lot of products from the different divisions. On the bottom we have LAN, which is Local Area Network, Division Power and Telecommunications.

MR. SIPIORA: Okay, your Honor, I move for the admission of DTX 631.

THE COURT: Any objection to 631?

MR. MELSHEIMER: No objection.

THE COURT: Thank you, that'll be received.

(Defendants' Exhibit Number 631 received into evidence)

[172] BY MR. SIPIORA:

Q First, let's date this if you could. What's the date of the – this Pulse Short Form Catalogue, which is DTX 631?

A If you could to the last page, the very last page, bottom right corner underneath where it says "catalogue 930," right there you'll see is July, 1994.

Q So within that halo, you see 7-94 as the date on this catalogue; is that right?

A That is correct, yes.

Q Now, does this –

A That is the date that it was published.

Q Okay, so you know that Halo filed its patent application in August, 1995, so this is more than one year prior from Halo filing its patent application; is that right?

A Yes.

Q And these products – you mentioned earlier there was two kinds of products generally, two categories: there are custom and there are kind of off the shelf.

A Yes.

Q Is that – is this catalogue –

A This is catalogue, off the shelf, available for anybody who is – has a need or application for the product.

Q All right, let's turn to the pages that are related to the transformers, if you could please, which is about four or five pages back. It starts at I think page 5. You see that?

[173] A Yes, I can see it.

Q All right, would you agree with me that there are four pages of transformer products that are either displayed or offered here?

A Yes, yes, the title on the top says "Transformers," yes.

Q Running through these, they are for different applications. Telecommunications – you highlight the middle of this page.

A Yeah.

Q These are telecommunications transformers. Then it carries over to the next page, correct?

A Yes.

Q On the bottom there's high-frequency LAN transformers.

A Yes, there are some for 10Base-T (indiscernible) applications and general purpose transformers.

Q And these are all transformers of a kind that are being litigated in this lawsuit right now?

A Yes.

Q Okay, so if we could, this catalogue, at the very beginning, if you could highlight the upper left on that page 5, it's – if I could just read it for the record here:

> "Pulse Engineering continues to expand its transformer product line with surface-mount

> and through-hole packages to accelerate in their design development many of the transformers performance [174] characteristics already marked – matched to the leading digital telecommunications and data communication transceiver ICs for wide and local area network applications."

Does this reflect the fact that at this time period, Pulse was offering both surface-mount technology packages and through-hole packages?

A Yes, that is correct.

Q And for consumers who were looking at this catalogue thinking about buying transformers from Pulse, how were they able to determine which were the through-hole construction and which were the surface-map construction?

A Well, it's very simple. If you look at this one page, if you go up to the bottom right corner, right above where it says "Pulse Engineering," you'll see SMP, surface-mount package, highlighted in blue. And then down underneath is the THT, which is a through-hole package. So anything that is highlighted on this page in blue, it's a surface-mount.

Q And then if it's not, then it would have been a through-hole; is that right?

A It's a through-hole, yes.

Q So in this time, Pulse is offering both options in terms of being able to –

A Yes.

Q – mounting on a printed circuit board.

[175] A Customer's got a choice to use same functionality on either through-hole or surface-mount.

Q All right, let's talk about it just for a minute. If a customer had a product from this time period, in the 1994 time period, it was a through-hole design, was it the case that Pulse was able to take that design, retain the electrical features, and convert it from through-hole to a surface-mount design?

A That is correct.

Q All right. Did that actually happen?

A Yes.

Q And how would that happen? How would we take a through-hole design with this electrical appliance for the toroids and the number of twists and so forth, how would you move that from through-hole to a surface-mount application?

A Well, there would be some basic changes. The first main change, as I explained before, you'll go from having straight pins to different pins that will have the gull wing. That will be the first basic change. And, of course, we'll change the type of soldering used to connect the wires because surface-mount products are soldered at much higher temperatures. It will require a higher temperature solder.

Q Could we – if we could go to 580, maybe you can illustrate for us, 580 which is the Western Electric part. If we could go to I guess it's the fourth page in, which shows the [176] – there you go. So this is the Western Electric open-header construction we've been talking about and this is the through-hole. And you can see it's a through-hole because on the right, see that (indicating) –

A Yes.

Q – those pins are straight. What would be involved in moving from this through-hole design to a surface-mount design if you took this Western Electric part in '94 and did that?

A If I wanted to simplify it, basic – can I mark? Can I mark –

Q Yeah, please.

A – on the screen? And I apologize for my chicken scratches, okay, so – so basically what we take is take this pin, change the configuration, bring it over this wall, and then do the gull wing. That would be a basic change. Of course, it's not as simple as that. Instead of going a pin or stick, if this would go to a lead frame there are (indiscernible) pins. But that would be the basic, simple change.

Q And is it the case that Pulse engaged in that kind of changes in their products to move from through-hole to surface-mount in that time period?

A That is correct, yes.

Q If you were to make that kind of move with respect to this product, to migrate the Western Electric part from the through-[177]hole design that we see in 1975 to 1980, and in the early '90s, move that as you did other products to surface-mount, would it – if you go back to demonstrative 13 – would it have some of these other features that we described earlier? For example, would it have a surface-mount package?

A Yes, you'll have both of those. That's – I draw the lead right now, that will make it a surface-mount package.

Q All right, and would it have the surface-mount lead as well?

A Correct, yes.

Q And would it have the end soldered post?

A Yes.

Q All right.

MR. SIPIORA: Okay, if you can take that down. I'm going to change subjects.

Q Well, Mr. Aldaco, your name has come up in connection with a couple of letters. I'm going to talk about them, hopefully not too long. But I think we need to discuss these. You're aware that Halo sent two letters to Pulse in 2002, correct?

A Yes.

Q All right, and if we could go to PTX 91 in your notebook, they're both in evidence. Then there's PTX 92, if you can pull that up perhaps. When did you first learn about these letters?

A Back in 2002.

Q How did you learn about these letters?

[178] A How did I? It was back when Mr. John Kowalski, the President of the company, he came into my office, he showed me the letter. And he wasn't sure what he wanted to do with the letter, but he showed it to me and said, "Can you give me your opinion." And I said – I wasn't sure what he meant because when I read the letter, it was very vague, so I wasn't sure what to do with it, so –

Q Did the letter include the final copy of one of the patents?

A Yes.

Q Do you remember what number patent it was?

A Not off the top of my head, no.

Q All right. Did you take the patent and examine it?

A Yes, I did.

Q All right, did you review it to see whether or not there was any issue with respect to Pulse infringing the patent?

A Yes, I reviewed the patent.

Q And how much time did you spend doing that?

A As I said in my declaration, it's difficult to remember, you know. This are things that happened nine or ten years ago. So to the best of my recollection, somewhere between one or two hours. I would say two hours.

Q Was that sufficient time for you to form a judgment as to whether or not there was an issue with respect to Pulse infringing the patent?

[179] A Yes.

Q All right, what conclusion did you come to?

A Well, first, when I read what his claim is – I just explain the Western Electric. I was reading the – what was claimed; and, as I was reading, I was thinking about Western Electric because everything that is claimed is basically what is included in the Western Electric, except for a couple of features that were not included. So my conclusion was that those – there was no novelty. Those were features that we'd been using for 20 years. So my conclusion was that the patent was not valid.

Q Did you consider any other products other than the Western Electric part? Do you specifically recall considering something else?

A Rockwell. Those – I said those were the two products. We have many open-header-type products, but those were the two that came up.

Q Okay. Now, did you provide a response to Mr. Kowalski in relation to the question of whether or not these products, this letter, this patent, created an issue?

A Once I gave deposition here I – as the same as with the deposition, I was asked this question like two or three, maybe four times. I could not come up with a straight answer. I'm saying it's like did I went and talk to John Kowalski? I should have, and I guess I did. Did I talk to him directly or [180] did I talk to Mr. Joe Elcampo (phonetic), who was my immediate manager? So – but I talked to – the message got across to Mr. John Kowalski either directly or through Mr. Joe Elcampo.

Q So is it the case that you don't remember specifically when you spoke to Mr. Elcampo, your supervisor, or Mr. Kowalski directly, but you do recall that you communicated back –

A Yes.

Q – to them your conclusion?

A That's correct.

Q And what was the conclusion that you communicated?

A The conclusion was that the patent must be invalid because what is claimed we have been using for many, many years.

Q In connection with that review, did you – well, around the time of the review, did you discuss the issue of the patent and the prior art, the technology of Pulse with anyone else at Pulse?

A Again, I cannot say for sure. It makes sense that I talked to the – I had mentioned Jim Lynn, who worked on the Rockwell, and – all I knew was Rockwell. I did not know the number. And I knew that I seen the product introduction, so I could have talked –

Q But do you specifically recall talking to him?

A Not for sure. I'm saying it makes sense that I would have talked to him, but, again, you know, that happened ten years ago, so – I talked to him, I know him for 20 years. We – he [181] sits outside my office, so it makes sense that I may have stepped out and went and talked to him for a minute or two, maybe longer. I don't know.

Q Did you speak to Mr. Pacho Gutierrez (phonetic)?

A Most likely I did. I don't – cannot say for sure.

Q You do recall, however, you looked at the patent, you reviewed it, and you gave your conclusion to either your boss or your boss's boss; is that right?

A Yes, that is correct.

Q Did – in connection with the activity, did you communicate at all with a lawyer?

A I gave – you know, I made my conclusion, I communicated my conclusion to either John Kowalski or Joe Elcampo, and I remember giving a copy of the letter to legal counsel.

Q In connection with giving your recommendation or your advice and conclusion to management, did you rely at all upon legal advice?

A No.

Q Okay.

A It was very obvious after I reviewed the patent and my recollection of what I remembered about the Western Electric and Rockwell. I saw no need.

Q Who – by the way, who else – did Pulse have patent counsel in that time period?

A Yes.

[182] Q Who was that person?

A Robert Kazinski (phonetic).

Q Okay. After you gave your report to either Mr. Elcampo or Mr. Kowalski, did you hear anything further regarding this issue of the letter from – or letters from Halo relating to the particular patent?

A Next thing I heard was five years after, so 2007.

Q Okay, so from the time that you gave your report to Mr. Kowalski or Mr. Elcampo, which was in approximately 2002; is that right?

A Yes.

Q The next thing you heard about this particular issue of the patent was when the lawsuit was filed in 2007?

A That is correct.

Q Now, the letters in front of you, if you can turn to the – particularly the second letter.

MR. SIPIORA: And I wonder if we could get rid of that squiggly, please. Thank you.

THE COURT: It didn't clear, did it? There.

MR. SIPIORA: There it goes, thank you.

BY MR. SIPIORA:

Q Did you – and now I'm looking at this letter, which is the August letter, did you or anyone at Pulse, to your knowledge, consider Halo's letter in 2002 to be notice of a claim of patent infringement?

[183] A No. It's like – again, it's not much different than the first letter. It is longer, but basically it is very vague. It says like, "You may." It says, "Halo has not reached any conclusive determinations." So, again, we were not being accused of anything.

Q Is it fair to say that Pulse took the position – took the statements in the letter at face value. In other words, that Halo was not accusing Pulse of infringement because Halo itself had not determined whether or not there was infringement?

A I think that is a fair assessment, yes.

Q Okay. All right, you can put that back. Just a couple last questions, Mr. Aldaco, you are an inventor; is that right?

A Yes.

Q You're inventor on a patent, right?

A One patent, yes.

Q Okay, all right, in connection with your work at Pulse, is it your practice to keep a record of your activity, in particular your design and development work?

A Yes. It's an engineering practice that one initial engineers, including myself as a director, I have an engineering book where we record all of the results of meetings, the assigned reviews. If we come up with a new design, a new concept, a new approach, we do a formal drawing or chicken scratches. And you reference, sometimes we ask if it is – if it is something that we would need, we would be . . .

* * *

[194] [Tom Melsheimer] opinion on a patent matter?

A Yes. I think that is a correct assessment. That I can remember, yes.

Q Now, he – I mean, he's the pre – he's the top dog at the company, right?

A Yes. He was the president.

Q He was at the time?

A Yes.

Q So, and I think you told us at your deposition that he used to kind of roam the halls and talk to people at the company?

A Yes.

Q But this was the first time he ever brought you a patent and a letter from a competitor of Pulse's and asked you to review this patent to determine if it was a valid patent, right?

A I don't think he asked me to review the patent. He gave me the letter. He asked me for an opinion.

Q So, he – he – he asked you for an opinion about the letter, generally, about the patent in particular, or you're not sure?

A I don't think he was sure, himself, what he was looking for. The letter was not specific and so it was making an offer. He said, what do you do when you get offer so –

Q Well –

[195] A So he wasn't sure what you guys were asking.

Q Sure.

A Neither did I.

Q Well, it was specific enough, though – can – can we agree on this, sir? That it was specific enough to – to send Mr. Kowalski down the halls of Pulse to go seek out one of their most senior engineers and ask for your opinion, right?

A Yes.

Q Now, you're not an attorney. Are you sir?

A I'm not.

Q You're happy about that, I bet.

A Yeah. I will never pretend I am.

Q Okay. And you don't hold yourself out as an expert in patents. Do – do I have that right?

A I'm not an expert.

Q And you don't hold yourself out as an expert in reviewing patents either. Is that fair?

A I have reviewed patents but I'm not an expert. That's the reason why we hire Mr. Kazinski.

Q When you were reviewing the Halo patent, sir, did you – I think you told us you didn't take any notes.

A No.

Q You didn't actually highlight the patent to your recollection, right?

A I don't think I did.

[196] Q You didn't create a file related to your review of the patent, right?

A No.

Q You didn't write down any of the thoughts you were having about the patent as you were reviewing it?

A No. I did not.

Q You think you spent about two hours doing this process, sir?

A Give or take, yes.

Q You concluded after that, based on your knowledge of – of the Pulse products, the earlier products, that the patent must be invalid, right?

A That is correct.

Q I think you told us in your deposition, sir, that you didn't review any legal principles about what makes a patent invalid before you reached this conclusion; did you sir?

A I did not.

Q You didn't look at the file history of the patent to see all of the back and forth that had gone on between the Patent Office and the emitter. You didn't do that either, right?

A They were not available, no.

Q Well, you say it wasn't available and I take it, it wasn't given to you.

A Were not given to me.

Q But, of course, that's something you know, as from your [197] own patent, you know you can go to the Patent Office – anyone can and obtain the file history of a patent, right? You know that.

A I've been told, yes.

Q No one else, to your knowledge, reviewed the Halo patent back in 2002, right?

A Not that I'm aware of.

Q You – you didn't give the patent to anyone else, right?

A I don't believe I did.

Q You didn't give it –

A As I said on my deposition, is I don't think I'm sure whether I did or not.

Q And once you reached your conclusion about this, sir, that you told us about, you don't think – and

I think you were pretty candid about this, with us earlier – you don't think you actually communicated directly to Mr. Kowalski, right?

A I cannot say for sure.

Q You think you may have told it to this fellow, Mr. O'Campo, right?

A That – that is a possibility, yes.

Q But – but you're pretty sure – in fact, you're very sure that you – you certainly told one or the other, right?

A Yes.

Q And, but when you did that, you didn't write it down in a memo, correct?

* * *

[203] said in your declaration, right?

A Yes. And I can read it.

Q And – and back in your – in your deposition you told us that back in 2002, when you concluded the patent was not valid based on your two hour review, that Pulse didn't change anything. They just did what you said was business as usual, right?

A That is the correct statement, yes.

Q And that's the business that usual – business as usual you're talking about there, sir, selling millions of dollars of accused products from 2002 onward, fair?

A I don't think that's what I meant. I said we continued doing what we'd been doing for many years.

Q And the business as usual included selling products that, as you know, Pulse – that Halo's accused of infringement, fair?

A I don't think we infringed anything. We – what I meant I said, we continued doing business as usual, meaning we continued building products built for 20 years. Or 15 years. That, to me, was business as usual.

Q You and I – Mr. Aldaco, you and I aren't going to agree on that but I appreciate your time and thank you for your answers.

THE COURT: Thank you. Any redirect Mr. Sipiora?

MR. SIPIORA: Just a brief couple questions, your [204] Honor.

THE COURT: All right.

REDIRECT EXAMINATION

BY MR. SIPIORA:

Q Mr. Aldaco, the event that took place with respect to Mr. Kowalski, what was the time period of – from the time he provided the letter to you with the patent to the time you reported back to Mr. O'Campo,

do you have an idea, or it's Mr. Kowalski, do you have an idea how much time elapsed?

A Between the time I got the patent and the time I went back to him, I would say within a couple of days.

Q Okay. So, ten years ago, within a couple of days, you spent a couple hours reviewing a patent and giving a report back?

A That is correct.

Q Is that right?

A Yes.

Q Thank you.

MR. SIPIORA: No further questions.

THE COURT: Thank you. Anything else?

MR. MELSHEIMER: No, your Honor.

THE COURT: All right. Thank you, sir. You may step down, Mr. Aldaco. Watch your step as you go down those stairs.

THE WITNESS: Do I leave this?

THE COURT: Yeah, just leave the materials there,

* * *

CERTIFICATION

I certify that the foregoing is a correct transcript from the electronic sound recording of the proceedings in the above-entitled matter.

/s/ Toni Hudson — November 15, 2012

Signed — Dated

TONI HUDSON, TRANSCRIBER

UNITED STATES DISTRICT COURT
DISTRICT OF NEVADA

Proposed Changes to Jury Instructions

(Filed Nov. 16, 2012)

* * *

Willful Infringement

In this case, Halo argues that Pulse willfully infringed Halo's patents. To prove willful infringement, Halo must first persuade you that Pulse infringed a valid claim of Halo's patent. The requirements for proving Pulse infringed were discussed in my prior instructions.

In addition, Halo must prove willful infringement by clear and convincing evidence. This means Halo must persuade you that it is highly probable that prior to the filing date of the complaint, Pulse acted with reckless disregard of the claims of Halo's patents.

To demonstrate such "reckless disregard," Halo must persuade you that Pulse actually knew, or it was so obvious that Pulse should have known, that Pulse's actions constituted infringement of a valid patent.

In deciding whether Pulse acted with reckless disregard for Halo's patents, you should consider all of the facts surrounding the alleged infringement including, but not limited to, whether Pulse acted in a

manner consistent with the standards of commerce for its industry.

You should base your decision on the issue of willful infringement on all of the evidence, regardless of which party presented it.

UNITED STATES DISTRICT COURT
DISTRICT OF NEVADA
LAS VEGAS DIVISION

HALO ELECTRONICS, INC.,	CASE NO: 2:07-CV-331-PMP-PAL
Plaintiff,	CIVIL
vs.	Las Vegas, Nevada
PULSE ELECTRONICS, INC., ET AL.,	Wednesday, Friday 16, 2012
Defendants.	(8:50 a.m. to 11:54 p.m.) (1:11 p.m. to 4:40 p.m.)

JURY TRIAL – DAY 8

BEFORE THE HONORABLE PHILIP M. PRO,
UNITED STATES DISTRICT JUDGE

APPEARANCES: See page 2

Law Clerks: Kara Rickey/Cristen Thayer

Court Recorder: Henry Enriquez

Courtroom Administrator: Donna Sherwood

Transcribed by: Exceptional Reporting Services, Inc.
P.O. Box 18668
Corpus Christi, TX 78480-8668
361 949-2988

Proceedings recorded by electronic sound recording; transcript produced by transcription service.

[4] Las Vegas, Nevada; Friday, November 16, 2012; 8:50 a.m.

Call to Order

(Jury Present)

THE CLERK: All rise.

THE COURT: All right, have a seat everybody. All members of the jury and Counsel and parties are present and we will proceed with further examination of Ms. Munson.

Come on back up, Ms. Munson, if you would and

Mr. Melsheimer has some questions for you on Cross Examination.

(Pause)

MR. MELSHEIMER: May it please the Court, good morning, your Honor.

THE COURT: All right, good morning. Go ahead.

CARRIE MUNSON, DEFENDANTS' WITNESS, PREVIOUS SWORN

CROSS EXAMINATION

BY MR. MELSHEIMER:

Q Good morning, ma'am, how are you?

A Good morning, Mr. Melsheimer, I'm good.

Q This isn't the first time you've acted as a – as the face of Pulse, isn't that right?

A I was – are you talking about in the Halo litigation?

Q Yes, ma'am.

A I was deposed as a witness in 2009 and then I was deposed in 2010 as a 30-B6?

Q And you know what that is, right?

[5] A It means I'm a –

THE COURT: Just so the jury understands, a 30-B6 witness is someone that a corporate party will designate as a person most knowledgeable in a company on particular subjects, and so one side will ask to take a deposition of the person most knowledgeable at the other company on the subject of Human Resources, for example, whatever the subject may be, so that's just a rule of Civil Procedure that's being referred to.

MR. MELSHEIMER: Thank you, your Honor.

BY MR. MELSHEIMER:

Q You were designated to testify for certain topics on behalf of the company, right?

A That's correct.

Q One of the topics you were designated about was Pulse's response to the 2002 letters from the Halo Company, fair?

A Yes, that's correct.

Q You talked to several people within the company to get knowledgeable about the company's response back in 2002, right?

A Yes, I did.

Q One of the people you talked to was a gentleman, Victor Aldaco whom we heard from earlier?

A Yes, I talked to Victor Aldaco.

Q You knew that he was – that he was an engineer or a senior engineer in the company, right?

A That's correct.

[6] You knew that his ultimate boss was this gentleman, Kowalski, right?

A The ultimate – yes, John Kowalski was the President, that's correct.

Q And so there's been a couple of questions about do you know if Mr. Kowalski received that letter and I just want to kind of want to get rid of that question because we know he did because he went down to talk to Victor Aldaco about it, right?

A That's correct, he went to talk to Victor Aldaco about the second letter is my understanding.

THE COURT: Ms. Munson, could you keep your voice up or maybe move that microphone right in front of you and speak right into it and just project a little bit so that everybody can hear you.

THE WITNESS: Is this better?

THE COURT: I think so. Donna, that's turned on isn't it? Have you got your system switched?

THE CLERK: It's on.

THE COURT: It's on, okay, good. Thanks.

BY MR. MELSHEIMER:

So there's no doubt that Mr. Kowalski received that letter because that's why he strolled down to Mr. Aldaco's office and said, "Victor, I need you to take a look at this.", right?

A Well, I believe that's what Victor testified to, yes.

Q Now Mr. Aldaco did some work on that in response to the [7] request from Mr. Kowalski, right?

A Yes, he did.

Q He didn't do very much work, though, did he, ma'am?

A I think he said he spent about an hour or two.

Q Well, you described it, on behalf of Pulse, as cursory, right?

A Well, I actually described it as cursiorary, made up my own word apparently. But, yes, he did a – in my opinion he did a review – an initial review of the patent. It was, from what I understand, only a few pages in relation to some patents he would use it could be many, many pages and the terms in the patent were very familiar to him, and so it was very easy for him to read it, to look at all of the terms. He didn't need to go research what a gold wing pin was, he didn't need to research what an open header was so he was familiar with all of the terms and he was also familiar with parts that Pulse has done in the past had already met those requirements.

Q Ma'am, what was my question?

A Your question was – I don't remember, how long was he – how long did he review –

THE COURT: Well, go ahead, ask another one.

BY MR. MELSHEIMER:

Q Well, let me suggest – let me ask another question. Did you describe, under oath, Mr. Aldaco's review as cursory, isn't that right?

[8] A You can say that, I used the word "cursiory", yes.

Q And just so we're on the same page, I looked it up in the dictionary and somebody mentioned Wikipedia, I don't trust that as much I do the books, but –

A Okay.

Q "Cursory" is defined by Websters as "not thorough or hasty".

Does that square with your understanding of the word "cursory"?

A I would not have used "hasty" as a term. I would have – my impression was that he did an initial review. I used the word "cursory" My opinion was he did an initial review and that's what he testified to.

Q After this cursory review, as you described it, no one at Pulse, as far as you know, made a conscious decision that it was permissible to keep selling the infringing products, fair?

A I'm not aware of any specific decision that was made, no.

Q Now let's talk about issued patents, ma'am, okay? Are you with me?

A Yes.

Q All issued patents are available to the public, isn't that right?

A That is my understanding.

Q And one of the reasons that patents are available is we want innovators to disclose their inventions and their thought [9] processes about

those inventions to advance the progress of technology, is that a fair statement?

A Yes.

Q We saw that in the video. I know it seems a while ago, but we saw that video at the very beginning where it's a way of advancing the arts, as they say, and art, in a broad sense, meaning all the kinds of ways that people can improve on different sorts of technology, right?

A Yes.

Q Now it turns out that Halo's patents were publicly available just like any other patent would be after it was filed and issued by the Patent Office, right?

A That's correct.

Q And it turns out that Pulse's own patents actually cite to the Halo technology as prior art.

Were you aware of that, ma'am?

A Until yesterday, no, I was not.

Q Well, let's take a look at Exhibit 151 –

(Pause)

MR. MELSHEIMER: May I approach, your Honor?

THE COURT: You may.

BY MR. MELSHEIMER:

Q And we see here, in Exhibit 151, this is the Machado patent, I believe we talked about this with

one of the earlier Pulse witnesses, but we have this patent of Mr. Machado. Now, [10] he's a Pulse engineer, correct?

A Yes, he is.

Q The assignee is Pulse Engineering?

A Yes.

Q This was filed way back in 1998?

A I show May 1, 2001 as the date of patent.

Q Where – why don't you look where it says "5", where we have highlighted, ma'am? Do you see that?

A Oh, yes. Yes, September 30th, 1998.

Q Sometimes that is confusing, but just so we're on the same page, the date that the patent was issued is on the right-hand column, May 1st, but it actually was filed in September of '98. In fact, really, if you go right below that, Mr. Ang, it's pretty clear it was even filed earlier than that, at least a portion of it was filed back in November of 1997.

Do you see that, ma'am?

A I'm not familiar enough with patents to understand if that's what that means.

Q Fair enough. So let's look at the prior art that's cited. One of the prior art patents that Mr. Machado cites in the review of the technology that Pulse was doing before they filed this patent, is it in

fact the loop patent, which is the Halo patent, the 985 patent, which the jury has in their notebooks, right?

A Yes, I believe that's the case.

[11] Q Of course, this is one of the reasons why Pulse had to admit that it was aware of the 985 Halo patents as far back as 1998, right, ma'am?

A I don't know that.

Q Well, you know that Pulse has admitted to knowing about the Halo patents as far back as 1998, you know that, don't you?

A Yes, I do.

Q And you don't know if this is the reason why they know that, but at least you and I can agree that as of the filing date of this patent, at least Mr. Machado and perhaps some others at Pulse knew about the 985 patents, right?

A I don't know that.

Q Well, you know it's on there?

A I don't know that Russ Machado knew anything about the 985 patent.

Q You know it's on the patent disclosure, right?

A Yes, I do.

Q Thank you. And by "it", I mean the 985 patent?

A Yes, I do.

Q That's not the only Pulse patent that cites this prior art, the loop patent. Let's take a look at Exhibit 446.

MR. MELSHEIMER: Also, if it's not into evidence, your Honor, I'll offer it.

THE COURT: Donna, is that in, by chance?

THE CLERK: 44 – I don't have a 446.

[12] THE COURT: Okay.

MR. MELSHEIMER: 446 is the Morrison patent, your Honor. We offer it.

THE COURT: All right. Any objection to 446?

MR. HOLOHAN: No, your Honor.

THE COURT: Thank you. That will be received.

(Plaintiff's Exhibit Number 446 was received in evidence)

BY MR. MELSHEIMER:

Q So this was a patent that was filed in January of 2001?

A That's correct.

Q The inventors here are a man named Morrison and a man named Gutierrez that we're going to hear about – that we're going to hear from, I guess, today, right?

A Yes, that's correct.

Q And this patent, as of January 31st, 2001 when it was filed, also cites – it cites a different Halo patent, in this event the 785 patent, do you see that, ma'am?

A Yes, I do.

Q Ma'am, were you here when Mr. Hansen testified about his conclusion based all of the materials that he looked at, that about 30 percent of products that are sold by Pulse, manufactured outside the United States, end up coming back into the United States? Were you here for that testimony?

A Yes, I was.

Q You know that he looked at publicly available information [13] to come up with that number?

A That's what he explained, yes.

Q He looked at annual reports of Cisco, do you recall him talking about that?

A Yes, I do.

Q And Cisco and other customers of Pulse, right?

A Yes.

Q You heard him say that he thought that estimate was a conservative estimate, ma'am?

A That's what he said, yes.

Q And you're here and you've heard the testimony from people like Mr. Carpenter of Pulse who admit, certainly that more than zero percent of Pulse products find their way back into the United States, you heard him say that, right?

A Yes, I did.

Q You are not here on behalf of the company to offer a different number, right, ma'am?

A No, I'm not.

Q Ma'am, we talked about this at the very beginning, that you're here as Ms. Munson, but you're also here as kind of Pulse, right?

A That's correct.

Q In fact, in some of your answers you actually said – yesterday you actually said "Pulse believes" or "Pulse thinks", right?

[14] A That's correct.

Q So I want to talk about, then, some of the positions that Pulse has advocated in this case. Are you with me?

A Yes.

Q So Pulse has one defense in the case that "We're not infringing", right?

A Correct.

Q That's a defense?

A Correct.

Q Now, to be an infringer you only have to infringe one claim of one patent, you know that, right?

A That's my understanding.

Q Okay. Now you understand that infringement, patent infringement, is like trespassing, right?

A You could describe it that way, I guess.

Q All right. Now before you came to Court did you feel pretty strongly about Pulse's noninfringement position?

A Absolutely.

Q All right. But you know that Dr. Larson testified yesterday –

MR. MELSHEIMER: Can I get the ELMO, please, ma'am?

Q – you were here for Dr. Larson, weren't you, ma'am?

A Yes.

Q And Dr. Larson testified that he's not offering any sort of noninfringement defense or position on any of the claims [15] that are checked in red.

A Did you ask me a question?

Q You know that Dr. Larson testified that he's not offering any sort of noninfringement defense for

any of the claims that are checked in red, you heard him say that, right?

A I believe that's what he said, yes.

Q And, in fact, as to the claim that's checked in green, that's already been decided by the Court, hasn't it, ma'am?

A That's my understanding, yes.

Q So when you said yesterday that Pulse has a policy of not infringing patents, you remember you said that?

A Uh-huh?

Q Right? I'm sorry, she's got to pick that up. You've got to say "yes" or "no".

A Yes, that's what I said yesterday.

Q And – but, in fact, at least as to these claims from your own expert, they're not – he's not offering any noninfringement arguments as to anything that is checked in red, fair?

A That is fair.

Q Now even though you are confident that you're not trespassing on Halo's property, you were confident before you came to Court, you've got another defense, though, right, ma'am?

A That's correct.

[16] Q So you say "We're not on your property." It turns out you are, but your one defense is "We're not on your property", "We", Pulse," but even if we are your deed is no good."?

A That's exactly correct. You don't own the property.

Q Now – but, just to be clear, if the patents are valid, are you still confident in your noninfringement position?

A I don't believe the patents are valid.

Q If the jury finds the patents are valid, ma'am, are you still confident in your noninfringement position is my question?

A If the patents are found to be valid then we would be infringing on the areas that they checked.

Q Let's talk about the "your deed's no good" defense, okay? So were you here when your lawyer wrote up on the board "We developed the technology first."?

A Yes.

MR. MELSHEIMER: And, may I, your Honor?

THE COURT: Sure.

(Pause)

BY MR. MELSHEIMER:

Q Did you see that, ma'am?

A Yes.

Q Do I have it right, "We developed the technology first."?

A Did you have to write it?

Q Do I have that correct, that that's what it said?

* * *

[256] Q [William Woodford] Right. Now it wasn't until 1977 that we're starting to see the first drawings from the accused Pulse parts. So all I'm saying is that there is a five-year gap there where you had knowledge of all of these old parts of Western Electric and Rockwell, but it took until 1997 before you had the accused parts, right?

A [Aurelio Gutierrez] Yes, I don't understand what the Rockwell and Western Electric – those are not surface-mounting components.

Q So you don't understand why that would be relevant to the accused parts.

A I don't see why they are relevant. They are two-hole components versus surface-mounting components. That can be a difference.

Q Okay.

MR. WOODFORD: I have no further questions.

THE COURT: Thank you. Mr. Reed, any further examination?

MR. REED: Very briefly, your Honor.

REDIRECT EXAMINATION

BY MR. REED:

Mr. Gutierrez, in your over 40 years working on and designing Pulse products, including many of the products that are accused of infringement in this case, did you ever copy a Halo part?

A No.

[257] Q In your over 40 years of working and designing Pulse products, are you aware of any instance where anyone at Pulse ever copied a Halo part?

A No, I wasn't even aware of existence of Halo, no. Never seen any product.

MR. REED: No further questions, your Honor.

THE COURT: Thank you. And anything further of the witness, Mr. Woodford?

MR. WOODFORD: Nothing further, your Honor.

THE COURT: All right, thank you, Mr. Gutierrez, you can be excused. Watch your step as you go down. You can just leave the exhibits there.

(Witness excused)

Ladies and gentlemen, we'll go ahead and break at this time for the weekend. I appreciate your patience, and let me tell you, I've consulted with counsel and it appears that we will finish the presentation of all the evidence on Monday. Actually, as I have reflected on it, counsel have been within the estimates that they had made. They told me eight days, and I think that's what I told you when you were selected. But I forgot to factor in that Tuesday was election day, we were breaking early, it was also jury selection. So we'll get in under the wire in eight days of actual evidentiary presentation. And then I anticipate the closing arguments will be on Tuesday morning for you, and you will then retire to

* * *

CERTIFICATION

I certify that the foregoing is a correct transcript from the electronic sound recording of the proceedings in the above-entitled matter.

/s/ Toni Hudson — November 17, 2012
Signed — Dated

TONI HUDSON, TRANSCRIBER

UNITED STATES DISTRICT COURT
DISTRICT OF NEVADA
LAS VEGAS DIVISION

DRAFT COPY

HALO ELECTRONICS, INC.,	CASE NO: 2:07-CV-331-PMP-PAL
Plaintiff,	CIVIL
vs.	Las Vegas, Nevada
PULSE ELECTRONICS, INC., ET AL.,	Monday, Friday 19, 2012
Defendants.	(8:27 a.m. to 12:22 p.m.) (1:18 p.m. to 4:43 p.m.)

JURY TRIAL – DAY 9

BEFORE THE HONORABLE PHILIP M. PRO,
UNITED STATES DISTRICT JUDGE

APPEARANCES: See page 2

Law Clerks: Kara Rickey/Cristen Thayer

Court Recorder: Henry Enriquez

Courtroom Administrator: Donna Sherwood

Transcribed by: Exceptional Reporting Services, Inc.
P.O. Box 18668
Corpus Christi, TX 78480-8668
361 949-2988

Proceedings recorded by electronic sound recording; transcript produced by transcription service.

[252] [Wilmer Bottoms] . . . entire industry looking for a solution to a problem they knew that the entire industry having available the references, at least the ones that were before the Patent Office in the re-exam, that they didn't come up with this solution. If it were obvious, they would have.

Q [Tom Melsheimer] Is Mr. Gutierrez's testimony that you talked about earlier, is that also, now that we've talked through some of these issues, might you put this in even more focus?

A Well, I think it comes to the same thing. He says, to just read his answers, "Yes, I don't understand what the Rockwell and Western Electric. These are not surface mounted components. I don't see why they are relevant." And that was in response to an answer of so you don't – on the question, "So you don't understand why that would be relevant to the accused parts." So as I think I said before, here's someone that probably knows as much about it as anyone. He certainly knows what's out in the prior art, both the ones they talked about as Dr. Larson's references and all the rest of them, and yet it wasn't obvious to him that it had any relevance to the accused part. So we have at least one very expert person who was there at the time, and even at the time that this testimony was given it wasn't obvious to him.

Q Now, putting aside everything you've told us so far, is there another important reason why you believe that Pulse has not established that the patents are obvious?

[255] Q Did you consider these secondary considerations of non-obviousness?

A Yes, I did.

Q Let's go through them quickly. We're not going to go through each one of them. We've highlighted one, two, four and six. And if you could, tell the jury why each of those demonstrates that the Halo patents are not obvious and therefore not invalid –

A Well –

Q – and give us an example of the evidence you've heard of each one. Can you do that?

A I hope so.

Q All right.

A The invention's commercial success, well, we've heard testimony here that Halo went from a threat of no revenue and had a very rapid revenue growth for a period of time after we got through the period of skepticism, percentage-wise an enormous growth rate. That's clear evidence of a commercial success. If I look at Pulse's information, once they began to ship accused parts, they shipped $257,000,000 worth of accused parts, according to the testimony we heard in the trial. That's clearly evidence of a commercial success.

Q Why is it, Doctor, that something being successful is a consideration that the jury should look at for why that would make it non-obvious?

[256] A Well, it makes it novel. If it weren't novel, why would it be successful? There were already other choices that gave them the same value. There were no such choices that gave them the sale value so it's non-obvious.

Q Let's look at Secondary Consideration of Non-Obvious Number Two. What is that?

A Long felt but unresolved needs.

Q What evidence did you find of that?

A Well, there was a lot of evidence presented in the testimony of the Pulse witnesses about this but we've heard several times during this trial that people knew about this problem for years. Sometime in the 1980s, we knew about the problem. The whole industry knew about the problem. We know that people were working on it. We know that Halo was working on it. We know that people were trying different kinds of solutions. I would submit that all of the solutions, except the one proposed by Halo, failed. And therefore, it was a long felt need and for years it was not resolved.

Q What about this notion of skepticism by others? What does that say about whether something is obvious or not obvious?

A Well, maybe I just point to the testimony of Mr. Heaton, Jeff Heaton, about what HP did. So when they came up with this design and they wanted their customers to make tests on it to see if it would meet their requirements, one of their customers did. They

sent the same parts at about the same time to [257] Hewlett Packard. As far as they are able to determine, Hewlett Packard never even evaluated the parts because they were different. And we heard other people, Mr. Diggins talked about the fact that the customers complained that they just – you know, they looked different. So we've heard testimony from several people that people considered that there was – that condition wasn't satisfied.

Q So in this notion of skepticism, is this like if you show someone something and it's obvious, they'll say, oh, of course. That's a great solution. Versus if you show someone something and they say, I'm not so sure about that. I don't think that's going to work. Is one of those an indication of it being obvious and one of those an indication of it being not obvious?

A Yes, I guess I heard someone – I forgot whose testimony it was but someone said that, well, that'll never work. It doesn't have anything on the bottom to protect it. And that's the first reaction you get. This is not the only part type that has that problem. And I can tell you that skepticism occurred for other things like Mimm's devices where they didn't have that protection.

Q Finally, "Teaching a Way by Others," what does that tell us about these patents being non-opvious?

A Well, if you look at the work that other people were doing, the solutions that they were pursuing – and there's quite a lot of evidence of that; it's present

in the testimony [258] we've heard. It's also present in the patents that were filed by the parties in this case, that they were working on other things. In fact, in Pulse's case the patents filed indicate that they were spending more of their time working on an interlocking part. They were spending time working on various ways to remove the requirement to wrap the wires around a terminal post. We have spent a lot of time talking about that but they were working on different things as opposed to the solution that ultimately was determined.

Q So the fact that Pulse was working in a different direction, what does that tell us about whether or not these patents are obvious?

A Well, if they thought this direction was obvious, this is the direction they would be working in.

Q We're not going to go through the others but did you consider those as well, sir, in your analysis?

A Yes, I did.

Q All right. Now, Pulse has offered another invalidity defense besides the ones we've talked about so far, correct?

A Yes, they have.

Q Does that involve the notion that this Mr. T.K Luk is the real inventor?

A Yes, they claim that the inventor was Mr. T.K. Luk rather than the Halo group that had worked on it for months.

Q Now, putting aside the evidence that the jury has in front

* * *

[271] [Tom Melsheimer] issue or the epoxy issue, how many claims of the patents does Pulse still infringe?

A [Wilmer Bottoms] Well we'd have to go back and look at it. I haven't been actually counting them up but most of them.

Q More than half, do you think, sir?

A Yes, well more than half.

Q All right.

A The only three groups that are affected in any significant way.

Q Finally, Dr. Bottoms, I want to end with the timeline that you helped us create.

MR. MELSHEIMER: Do we have that, Mr. Ang? I have it actually.

Q What is illustrated in this timeline and why is it important to your conclusion that the Halo patents are not obvious?

A Well, it's some evidence of the work that Pulse was doing during this period of time. Obviously, I don't have all evidence of what they were doing but

it starts off with Western Electric and two whole parts, 1975 through sometime in 1980. 1986 Rockwell part was introduced. It shipped for about three years, about 700,000 parts if I remember correctly. Then in 1991, we see the length – Gutierrez patent criticizing designs with wires wrapped on them and soldering on terminal pins. And they explained that that was part of the problem they were [272] trying to solve. In 1994, Pulse switched their 65967 part from a silicone to epoxy. Now, I don't know exactly why they made that change but the only thing I can surmise is that it was done to give the part more strength. Somehow more strength is competing against the forces that cause it to fail.

Q What is happening in 1996 and 1997 while the Halo patents are in the patent office?

A Well, they continued to promote their transfer molded parts heavily and they're introducing new versions of it which are the interlock part.

Q And as far as 2001, is Pulse going – with its ideas and designs is it at that point going towards the Halo design or is it suggesting a totally different direction?

A There's nothing that suggests that doing any work toward the Halo designs until after the Halo product had been sold for some period of time and began to take market share.

Q In light of all this, does it make any sense to make the argument that the Halo patent claims are obvious?

A It certainly makes no sense to me.

MR. MELSHEIMER: I tender the witness for cross-examination, your Honor.

THE COURT: All right. Ladies and gentlemen, we're going to take a break for 10 minutes before we have cross-examination. Do you have that little – Donna, would you gather that and hang on to that, please. We'll take a 10-

* * *

[301] [David Sipiora] among the elements of the Halo invention?

A [Wilmer Bottoms] I think that the other elements had some implementation of some sort in each case, not necessarily the same. And it's not just the sum of the elements; it's how they're combined to form a solution.

Q Well, isn't it the case that we've heard testimony repeatedly that all of the elements were known and available in the art and your position is just the way that they're combined that makes them special, right?

A You've heard testimony from someone, but you haven't heard it from me. I've already told you that there were two that were not known and common in the art.

Q Okay. Now let's talk about predictable results, the idea of opening the bottom. It was a predictable result by taking the bottom off on this

design, this two-piece design, that the (indiscernible) (3:59:45) would have a place to go, correct?

A That's correct.

Q That wasn't a big surprise?

A I don't think so.

Q In fact it was predictable?

A I think it was an expected result.

Q Okay. So known methods and predictable results and you're disagreeing with me on a couple of things that you think maybe weren't familiar, but we haven't really got down to the bottom (4:00:04) other than maybe pins and maybe standoffs in surface [302] mounts, is that right? Is that fair?

A I think that's fair.

Q Okay. So let's – I'd like to move over to Dr. Larsen's analysis, which you've talked about a bit, and you know that he looked at four different references in particular in the context of his analysis, right?

A I do.

Q I think he looked at Valor, Western Electric, Rockwell, and Akachi, right?

A That's correct.

Q Okay. So let's start with Valor. You've already agreed that notched posts were well known in the art in August 1995, correct?

A Yes.

Q Okay. And in fact, we've seen –

MR. SIPIORA: If we can pull up Demonstrative 2-A.

We've seen this before. If we could pull up the Valor drawing on the left and the Halo drawing on the right.

BY MR. SIPIORA:

Q So you've seen these before, right?

A Yes, I have.

Q All right. You know that in connection with the analysis of invalidity with respect to a number of the claims the only element missing from a combination with Rockwell is the notched post, correct?

[303] A Yes, there are some of the claims that have notched posts missing.

Q Yes, so if you have a notched post with Rockwell you have invalidity with several of the claims (4:01:24)?

A With some of the claims, yes.

Q Okay. So a notched post in Rockwell (indiscernible) Rockwell and the notched post is the only thing (indiscernible) these claims. So let's look at a notched post.

A notched post was known to Valor in 1989. You've seen this repeatedly, this drawing, correct, it's on your screen?

A Yes.

Q And we know that Halo had a notched post in 1992, correct?

A I believe '92 is the appropriate date.

Q And you would agree with me that these drawings are identical, would you not?

A They appear to be.

MR. SIPIORA: Okay. So let's go to the next slide. All right. Okay.

So what I'd like to do is I'd like to go – if you could take that down. Let's go to 539.

BY MR. SIPIORA:

Q Are you familiar with this drawing?

A I don't see a drawing yet.

Q Oh, well, maybe another minute.

[304] A Yes, it's up now.

Q Okay. You've heard – are you familiar with this drawing?

A Yes, I've seen that drawing before.

Q Okay. And you've heard testimony that this was a drawing that came, was faxed from T.K. Luk to Jim Heaton on June 22nd, 1994, correct?

A There was more than one version of this drawing and I've certainly heard testimony that it has been faxed back and forth. I can't actually read the dates on here and I don't remember the dates of each time it went back and forth, but if you say it's so, it's okay.

Q All right. So – and we know that in this case that Halo has said this is the first evidence that they have of the conception of their entire invention, correct?

A I'm not sure I would characterize it that way, because we have their testimony, which I believe is evidence.

Q Well, no, they say that the first document, a document that shows their conception –

A If you're restricting it to a document, yes –

Q Okay.

A – I believe that's the only one they have.

Q Okay, it's the only one they have, so let's be clear for the jury here, this document, 539, is the document that Halo has pointed to as evidence of its conception of the invention that's at issue in this case, the invention's all here

* * *

UNITED STATES DISTRICT COURT
DISTRICT OF NEVADA

Jury Instructions

(Filed Nov. 20, 2012)

* * *

Willful Infringement

In this case, Halo argues that Pulse willfully infringed Halo's patents.

To prove willful infringement, Halo must first persuade you that Pulse infringed a valid claim of Halo's patent. The requirements for proving Pulse infringed were discussed in my prior instructions.

In addition, Halo must prove willful infringement by clear and convincing evidence. This means Halo must persuade you that it is highly probable that prior to the filing date of the complaint, Pulse acted with reckless disregard of the claims of Halo's patents.

To demonstrate such "reckless disregard," Halo must persuade you that Pulse actually knew, or it was so obvious that Pulse should have known, that Pulse's actions constituted infringement of a valid patent.

In deciding whether Pulse acted with reckless disregard for Halo's patents, you should consider all of the facts surrounding the alleged infringement including, but not limited to, whether Pulse acted in a

manner consistent with the standards of commerce for its industry.

You should base your decision on the issue of willful infringement on all of the evidence, regardless of which party presented it.

UNITED STATES DISTRICT COURT
DISTRICT OF NEVADA
LAS VEGAS DIVISION

HALO ELECTRONICS, INC.,	CASE NO: 2:07-CV-331-PMP-PAL
Plaintiff,	CIVIL
vs.	Las Vegas, Nevada
PULSE ELECTRONICS, INC., ET AL.,	Tuesday, Friday 20, 2012
Defendants.	(8:28 a.m. to 12:16 p.m.) (12:46 p.m. to 6:34 p.m.)

JURY TRIAL – DAY 10

BEFORE THE HONORABLE PHILIP M. PRO,
UNITED STATES DISTRICT JUDGE

APPEARANCES:	See page 2
Law Clerks:	Kara Rickey/Cristen Thayer
Court Recorder:	Henry Enriquez
Courtroom Administrator:	Donna Sherwood
Transcribed by:	Exceptional Reporting Services, Inc. P.O. Box 18668 Corpus Christi, TX 78480-8668 361 949-2988

Proceedings recorded by electronic sound recording; transcript produced by transcription service.

[172] [The Court] . cannot be liable for infringement.

"In this case Halo argues that Pulse willfully infringed Halo's patents. To prove willful infringement, Halo must first persuade you that Pulse infringed a valid claim of Halo's patent. The requirement for proving Pulse's – I'm sorry. The requirements for proving Pulse infringed were discussed in my prior instructions. In addition, Halo must prove willful infringement by clear and convincing evidence. This means Halo must persuade you that it is highly probable that prior to the filing date of the complaint, Pulse acted with reckless disregard of the claims of Halo's patents. To demonstrate such reckless disregard, Halo must persuade you that Pulse actually knew or it was so obvious that Pulse should have known, that Pulse's actions constituted infringement of a valid patent. In deciding whether Pulse acted with reckless disregard for Halo's patents, you should consider all of the facts surrounding the alleged infringement including, but not limited to, whether Pulse acted in a manner consistent with the standard of commerce for its industry. You should base your decision on the issue of willful infringement on all of the evidence, regardless of which party presented it.

* * *

CERTIFICATION

I certify that the foregoing is a correct transcript from the electronic sound recording of the proceedings in the above-entitled matter.

/s/ Toni Hunger [SEAL]

HUDSON, TRANSCRIBER

November 21, 2012

UNITED STATES DISTRICT COURT

DISTRICT OF NEVADA

* * *

HALO ELECTRONICS, INC., Plaintiff, v. PULSE ELECTRONICS, INC. and PULSE ELECTRONICS CORPORATION, Defendants.	2:07-cv-00331-PMP-PAL **VERDICT** (Filed Nov. 20, 2012)

We, the jury in the above-entitled case, find the following special verdict on the questions submitted to us:

FINDINGS ON INFRINGEMENT

I. Direct Infringement

A. U.S. Patent No. 5,656,985 ("the '985 patent")

QUESTION 1: Has Halo proven that it is more likely than not that each of the following Pulse products has directly infringed any of the following claims of the '985 patent?

a. *Pulse H0022 Product:*

Claim 6: YES (finding for Halo) YES
NO (finding for Pulse) ____

Claim 7: YES (finding for Halo) YES
NO (finding for Pulse) ____

Claim 8: YES (finding for Halo) YES
NO (finding for Pulse) ____

Claim 16: YES (finding for Halo) YES
NO (finding for Pulse) ____

b. *Pulse H1260 Product:*

Claim 6: YES (finding for Halo) YES
NO (finding for Pulse) ____

Claim 7: YES (finding for Halo) YES
NO (finding for Pulse) ____

Claim 8: YES (finding for Halo) YES
NO (finding for Pulse) ____

Claim 16: YES (finding for Halo) YES
NO (finding for Pulse) ____

c. *Pulse H1305 Product:*

Claim 6: YES (finding for Halo) YES
NO (finding for Pulse) ____

Claim 7: YES (finding for Halo) YES
NO (finding for Pulse) ____

Claim 8: YES (finding for Halo) YES
NO (finding for Pulse) ____

Claim 16: YES (finding for Halo) YES
NO (finding for Pulse) ____

d. *Pulse H1174 Product:*

Claim 6: YES (finding for Halo) YES
NO (finding for Pulse) ____

Claim 7: YES (finding for Halo) YES
NO (finding for Pulse) ____

Claim 8: YES (finding for Halo) YES
NO (finding for Pulse) ____

Claim 16: YES (finding for Halo) YES
NO (finding for Pulse) ____

e. *Pulse H0026 Product:*

Claim 6: YES (finding for Halo) YES
NO (finding for Pulse) ____

Claim 7: YES (finding for Halo) YES
NO (finding for Pulse) ____

Claim 8: YES (finding for Halo) YES
NO (finding for Pulse) ____

Claim 16: YES (finding for Halo) YES
NO (finding for Pulse) ____

f. *Pulse H0019 Product:*

Claim 6: YES (finding for Halo) ____
NO (finding for Pulse) NO

Claim 7: YES (finding for Halo) ____
NO (finding for Pulse) NO

Claim 8: YES (finding for Halo) ____
NO (finding for Pulse) NO

Claim 16: YES (finding for Halo) ____
NO (finding for Pulse) NO

g. *Pulse 23Z110SMNL Product:*

Claim 8: YES (finding for Halo) YES
NO (finding for Pulse) ____

Claim 16: YES (finding for Halo) YES
NO (finding for Pulse) ____

B. U.S. Patent No. 6,297,720 ("the '720 patent")

QUESTION 2: Has Halo proven that it is more likely than not that each of the following Pulse products has directly infringed any of the following claims of the '720 patent?

a. *Pulse H0022 Product:*

Claim 6: YES (finding for Halo) YES
NO (finding for Pulse) ____

b. *Pulse H0009 Product:*

Claim 1: YES (finding for Halo) YES
NO (finding for Pulse) ____

c. *Pulse H1260 Product:*

Claim 1: YES (finding for Halo) YES
NO (finding for Pulse) ____

Claim 6: YES (finding for Halo) YES
NO (finding for Pulse) ____

d. *Pulse H1305 Product:*

Claim 1: YES (finding for Halo) YES
NO (finding for Pulse) ____

Claim 6: YES (finding for Halo) YES
NO (finding for Pulse) ____

e. *Pulse H1174 Product:*

Claim 1: YES (finding for Halo) YES
NO (finding for Pulse) ____

Claim 6: YES (finding for Halo) YES
NO (finding for Pulse) ____

f. *Pulse H0026 Product:*

Claim 6: YES (finding for Halo) YES
NO (finding for Pulse) ____

g. *Pulse H0019 Product:*

Claim 1: YES (finding for Halo) YES
NO (finding for Pulse) ____

Claim 6: YES (finding for Halo) [redacted]
NO (finding for Pulse) NO

h. *Pulse 23Z110SMNL Product:*

Claim 6: YES (finding for Halo) YES
NO (finding for Pulse) ____

C. U.S. Patent No. 6,344,785 ("the '785 patent")

QUESTION 3: Has Halo proven that it is more likely than not that each of the following Pulse products has directly infringed any of the following claims of the '785 patent?

a. *Pulse H0022 Product:*

Claim 40: YES (finding for Halo) YES
NO (finding for Pulse) ____

Claim 48: YES (finding for Halo) YES
NO (finding for Pulse) ____

b. *Pulse H0009 Product:*

Claim 40: YES (finding for Halo) YES
NO (finding for Pulse) ____

Claim 48: YES (finding for Halo) YES
NO (finding for Pulse) ____

c. *Pulse H1260 Product:*

Claim 40: YES (finding for Halo) YES
NO (finding for Pulse) ____

Claim 48: YES (finding for Halo) YES
NO (finding for Pulse) ____

d. *Pulse H1305 Product:*

Claim 40: YES (finding for Halo) YES
NO (finding for Pulse) ____

Claim 48: YES (finding for Halo) YES
NO (finding for Pulse) ____

e. *Pulse H1174 Product:*

Claim 40: YES (finding for Halo) YES
NO (finding for Pulse) ____

Claim 48: YES (finding for Halo) YES
NO (finding for Pulse) ____

f. *Pulse H0026 Product:*

Claim 40: YES (finding for Halo) YES
NO (finding for Pulse) ____

Claim 48: YES (finding for Halo) YES
NO (finding for Pulse) ____

g. *Pulse H0019 Product:*

Claim 40: YES (finding for Halo) YES
NO (finding for Pulse) ____

Claim 48: YES (finding for Halo) YES
NO (finding for Pulse) ____

II. Induced Infringement

A. The '985 Patent

QUESTION 4: With respect to the following Pulse products, has Halo proven that it is more likely than not that Pulse induced others to infringe the '985 Patent?

IF YOUR ANSWER TO QUESTION 1 WAS "NO" FOR ANY PULSE PRODUCT WITH RESPECT TO ANY CLAIM OF THE '985 PATENT, THEN YOUR ANSWER TO THIS QUESTION 4 MUST ALSO BE "NO" FOR THAT SAME PRODUCT AND THAT SAME CLAIM.

a. *Pulse H0022 Product:*

Claim 6: YES (finding for Halo) YES
NO (finding for Pulse) ____

Claim 7: YES (finding for Halo) YES
NO (finding for Pulse) ____

Claim 8: YES (finding for Halo) YES
NO (finding for Pulse) ____

Claim 16: YES (finding for Halo) YES
NO (finding for Pulse) ____

b. *Pulse H1260 Product:*

Claim 6: YES (finding for Halo) YES
NO (finding for Pulse) ____

Claim 7: YES (finding for Halo) YES
NO (finding for Pulse) ____

Claim 8: YES (finding for Halo) YES
NO (finding for Pulse) ____

Claim 16: YES (finding for Halo) YES
NO (finding for Pulse) ____

c. *Pulse H1305 Product:*

Claim 6: YES (finding for Halo) YES
NO (finding for Pulse) ____

Claim 7: YES (finding for Halo) YES
NO (finding for Pulse) ____

Claim 8: YES (finding for Halo) YES
NO (finding for Pulse) ____

Claim 16: YES (finding for Halo) YES
NO (finding for Pulse) ____

d. *Pulse H1174 Product:*

Claim 6: YES (finding for Halo) YES
NO (finding for Pulse) ____

Claim 7: YES (finding for Halo) YES
NO (finding for Pulse) ____

Claim 8: YES (finding for Halo) YES
NO (finding for Pulse) ____

Claim 16: YES (finding for Halo) YES
NO (finding for Pulse) ____

e. *Pulse H0026 Product:*

Claim 6: YES (finding for Halo) YES
NO (finding for Pulse) ____

Claim 7: YES (finding for Halo) YES
NO (finding for Pulse) ____

Claim 8: YES (finding for Halo) YES
NO (finding for Pulse) ____

Claim 16: YES (finding for Halo) YES
NO (finding for Pulse) ____

f. *Pulse H0019 Product:*

Claim 6: YES (finding for Halo) ____
NO (finding for Pulse) NO

Claim 7: YES (finding for Halo) ____
NO (finding for Pulse) NO

Claim 8: YES (finding for Halo) ____
NO (finding for Pulse) NO

Claim 16: YES (finding for Halo) ____
NO (finding for Pulse) NO

g. *Pulse 23Z110SMNL Product:*

Claim 8: YES (finding for Halo) YES
NO (finding for Pulse) ____

Claim 16: YES (finding for Halo) YES
NO (finding for Pulse) ____

B. The '720 Patent

QUESTION 5: With respect to the following Pulse products, has Halo proven that it is

more likely than not that Pulse induced others to infringe the '720 patent?

YOU MUST ANSWER QUESTION 5(a) WITH RESPECT TO CLAIM 1. FOR ALL OTHER CLAIMS, IF YOUR ANSWER TO QUESTION 2 WAS "NO" FOR ANY PULSE PRODUCT WITH RESPECT TO ANY CLAIM OF THE '720 PATENT, THEN YOUR ANSWER TO THIS QUESTION 5 MUST ALSO BE "NO" FOR THAT SAME PRODUCT AND THAT SAME CLAIM.

a. *Pulse H0022 Product:*

Claim 1: YES (finding for Halo) YES
NO (finding for Pulse) ____

Claim 6: YES (finding for Halo) YES
NO (finding for Pulse) ____

b. *Pulse H0009 Product:*

Claim 1: YES (finding for Halo) YES
NO (finding for Pulse) ____

c. *Pulse H1260 Product:*

Claim 1: YES (finding for Halo) YES
NO (finding for Pulse) ____

Claim 6: YES (finding for Halo) YES
NO (finding for Pulse) ____

d. *Pulse H1305 Product:*

Claim 1: YES (finding for Halo) YES
NO (finding for Pulse) ____

Claim 6: YES (finding for Halo) YES
NO (finding for Pulse) ____

e. *Pulse H1174 Product:*

Claim 1: YES (finding for Halo) YES
NO (finding for Pulse) ____

Claim 6: YES (finding for Halo) YES
NO (finding for Pulse) ____

f. *Pulse H0026 Product:*

Claim 6: YES (finding for Halo) YES
NO (finding for Pulse) ____

g. *Pulse H0019 Product:*

Claim 1: YES (finding for Halo) YES
NO (finding for Pulse) ____

Claim 6: YES (finding for Halo) ____
NO (finding for Pulse) NO

h. *Pulse 23Z110SMNL Product:*

Claim 6: YES (finding for Halo) YES
NO (finding for Pulse) ____

C. The '785 Patent

QUESTION 6: With respect to the following Pulse products, has Halo proven that it is more likely than not that Pulse induced others to infringe the '785 patent?

IF YOUR ANSWER TO QUESTION 3 WAS "NO" FOR ANY PULSE PRODUCT WITH RESPECT TO ANY CLAIM OF THE '785 PATENT, THEN YOUR ANSWER TO

THIS QUESTION 6 MUST ALSO BE "NO" FOR THAT SAME PRODUCT AND THAT SAME CLAIM.

a. *Pulse H0022 Product:*

Claim 40: YES (finding for Halo) YES
NO (finding for Pulse) ____

Claim 48: YES (finding for Halo) YES
NO (finding for Pulse) ____

b. *Pulse H0009 Product:*

Claim 40: YES (finding for Halo) YES
NO (finding for Pulse) ____

Claim 48: YES (finding for Halo) YES
NO (finding for Pulse) ____

c. *Pulse H1260 Product:*

Claim 40: YES (finding for Halo) YES
NO (finding for Pulse) ____

Claim 48: YES (finding for Halo) YES
NO (finding for Pulse) ____

d. *Pulse H1305 Product:*

Claim 40: YES (finding for Halo) YES
NO (finding for Pulse) ____

Claim 48: YES (finding for Halo) YES
NO (finding for Pulse) ____

e. *Pulse H1174 Product:*

Claim 40: YES (finding for Halo) YES
NO (finding for Pulse) ____

Claim 48: YES (finding for Halo) YES
NO (finding for Pulse) ____

f. *Pulse H0026 Product:*

Claim 40: YES (finding for Halo) YES
NO (finding for Pulse) ____

Claim 48: YES (finding for Halo) YES
NO (finding for Pulse) ____

g. *Pulse H0019 Product:*

Claim 40: YES (finding for Halo) YES
NO (finding for Pulse) ____

Claim 48: YES (finding for Halo) YES
NO (finding for Pulse) ____

IV. Willful Infringement

QUESTION 7: Has Halo proven that it is highly probable that Pulse's infringement was willful?

YES (finding for Halo) YES
NO (finding for Pulse) ____

FINDINGS ON PULSE'S INVALIDITY DEFENSES

I. Obviousness

QUESTION 8: Has Pulse proven that it is highly probable that the following claims of the '985 patent are invalid because they were obvious to one of ordinary skill in the field at the time of the invention?

Claim 6: YES (finding for Pulse) ____
NO (finding for Halo) NO

Claim 7: YES (finding for Pulse) ____
NO (finding for Halo) NO

Claim 8: YES (finding for Pulse) ____
NO (finding for Halo) NO

Claim 16: YES (finding for Pulse) ____
NO (finding for Halo) NO

QUESTION 9: Has Pulse proven that it is highly probable that the following claims of the '720 patent are invalid because they were obvious to one of ordinary skill in the field at the time of the invention?

Claim 1: YES (finding for Pulse) ____
NO (finding for Halo) NO

Claim 6: YES (finding for Pulse) ____
NO (finding for Halo) NO

QUESTION 10: Has Pulse proven that it is highly probable that the following claims of the '785 patent are invalid because they were obvious to one of ordinary skill in the field at the time of the invention?

Claim 40: YES (finding for Pulse) ____
NO (finding for Halo) NO

Claim 48: YES (finding for Pulse) ____
NO (finding for Halo) NO

II. Inventorship

QUESTION 11: Has Pulse proven that it is highly probable that the '985 patent is invalid because it failed to name all actual inventors?

YES (finding for Pulse) ____
NO (finding for Halo) NO

QUESTION 12: Has Pulse proven that it is highly probable that the '720 patent is invalid because it failed to name all actual inventors?

YES (finding for Pulse) ____
NO (finding for Halo) NO

QUESTION 13: Has Pulse proven that it is highly probable that the '785 patent is invalid because it failed to name all actual inventors?

YES (finding for Pulse) ____
NO (finding for Halo) NO

FINDINGS ON DAMAGES (if applicable)

I. Damages Period

IF YOU HAVE ANSWERED "YES" FOR ALL CLAIMS IN QUESTIONS 8-10, AND/OR "YES" FOR ALL PATENTS IN QUESTIONS 11-13, THEN DO NOT ANSWER THE REMAINING QUESTIONS AND PROCEED TO THE END OF THIS PAGE 11 TO DATE AND SIGN THIS VERDICT FORM.

QUESTION 14: Has Halo proven that it is more likely than not that it marked substantially all of the products it made, offered for sale, or sold under each of its patents, and

that Halo made reasonable efforts to ensure that its licensees who made, offered for sale, or sold products under each of its patents marked the products on some date before March 15, 2007?

YES (finding for Halo) YES
NO (finding for Pulse) ____

If YES, on what date? July 1st, 2003

II. Royalty Rate

QUESTION 15: What royalty rate has Halo shown that more likely than not would be adequate to compensate Halo for Pulse's infringement?

Royalty Rate: 4.5 %

III. Total Amount of Damages

QUESTION 16: What total amount of damages has Halo shown more likely than not would be adequate to compensate Halo for Pulse's infringement?

Amount of Damages: $1,500,000.00

Date and sign this verdict form.

DATED: 11/26/12

_____

No. 14-1513

DEC - 9 2015
OFFICE OF THE CLERK

In The Supreme Court of the United States

HALO ELECTRONICS, INC.,

Petitioner,

v.

PULSE ELECTRONICS, INC.,
PULSE ELECTRONICS CORPORATION,

Respondents.

On Writ Of Certiorari To The United States Court Of Appeals For The Federal Circuit

JOINT APPENDIX
VOLUME II
EXHIBITS

Counsel for Petitioner

CRAIG E. COUNTRYMAN
Counsel of Record
FISH & RICHARDSON P.C.
12390 El Camino Real
San Diego, CA 92130
(858) 678-5070
countryman@fr.com

Counsel for Respondents

MARK L. HOGGE
Counsel of Record
DENTONS US LLP
1301 K Street, NW,
Suite 600
Washington, D.C. 20005
(202) 408-6400
mark.hogge@dentons.com

[Additional Counsel Listed On Inside Cover]

Petition For Certiorari Filed June 22, 2015
Certiorari Granted October 19, 2015

COCKLE LEGAL BRIEFS (800) 225-6964
WWW.COCKLELEGALBRIEFS.COM

Additional Counsel
for Petitioner

MICHAEL J. KANE
WILLIAM R. WOODFORD
JOHN A. DRAGSETH
FISH & RICHARDSON P.C.
3200 RBC Plaza
60 South Sixth Street
Minneapolis, MN 55402
(612) 335-5070

Additional Counsel
for Respondents

SHAILENDRA K. MAHESHWARI
CHARLES R. BRUTON
RAJESH C. NORONHA
DENTONS US LLP
1301 K Street, NW,
Suite 600
Washington, D.C. 20005
(202) 408-6400

TABLE OF CONTENTS

Page

VOLUME II

(Exhibits arranged according to exhibit number)

Plaintiff's Exhibit PTX-91, July 9, 2015 Letter from Halo to Pulse re Potential License to Halo Patents, admitted into evidence on November 7, 2012 195

Plaintiff's Exhibit PTX-92, August 6, 2015 Letter from Halo to Pulse re Potential License to Halo Patents, admitted into evidence on November 7, 2012 197

Plaintiff's Exhibit PTX-123, Toolmaker Drawing of Halo's Surface Mount Transformer, admitted into evidence on November 13, 2012 199

Defendants' Exhibit DTX-512, Drawing of Pulse's Surface Mount Technology from 1991, admitted into evidence on November 14, 2012 201

Defendants' Exhibit DTX-526, Drawing of Pulse Part PE-64309 from 1986, admitted into evidence on November 14, 2012 202

Defendants' Exhibit DTX-533 (A7955-56.4), Excerpt from "Electronic Packaging and Interconnection Handbook" 206

Defendants' Exhibit DTX-539, Toolmaker Drawing of Halo's Surface Mount Transformer, admitted into evidence on November 13, 2012 211

TABLE OF CONTENTS – Continued

Page

Defendants' Exhibit DTX-559, Drawing of Valor Part from 1989, admitted into evidence on November 7, 2012 213

Defendants' Exhibit DTX-563, Drawing of Pulse Part ST7047 from 1993, admitted into evidence on November 15, 2012 218

Defendants' Exhibit DTX-580, Drawing of Pulse Part PE060589 from 1980, admitted into evidence on November 14, 2012.....226

Defendants' Exhibit DTX-605 (A8622-23.5), Excerpt from "Handbook of Surface Mount Technology", admitted into evidence on November 15, 2012 236

Defendants' Exhibit DTX-626, Japanese Unexamined Utility Model Application Publication H5-55513, admitted into evidence on November 15, 2012 241

Defendants' Exhibit DTX-644, Drawing of Pulse Part PE-65793, admitted into evidence on November 14, 2012 256

UNITED STATES DISTRICT COURT
DISTRICT OF NEVADA

(Admitted Into Evidence On 11/7/12)

Plaintiff's Trial Exhibit
PTX 91
2:07-cv-00331-PMP

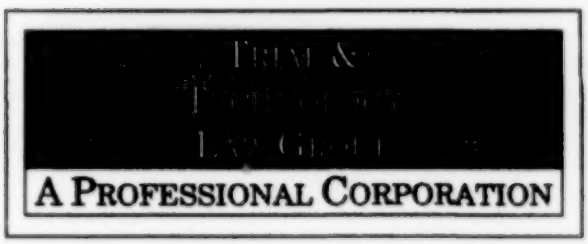

545 MIDDLEFIELD ROAD
SUITE 220
MENLO PARK, CALIFORNIA
94025

TELEPHONE: (650) 324-2223
FACSIMILE: (650) 324-0178
URL: WWW.TECHTRIALLAW.COM
E-MAIL: INFO@TECHTRIALLAW.COM

Robert A. Spanner
Direct Dial Number: (650) 324-2277
E-mail: ras@techtriallaw.com

July 9, 2002

John Kowalski, President
Pulse Engineering
12220 World Trade Drive
San Diego, CA 92128

Re: **Halo Electronics, Inc.**

Dear Mr. Kowalski:

We are writing on behalf of Halo Electronics, Inc. ("Halo") to notify you of certain surface mount packaging patents the company has recently acquired. copies of which are enclosed for your reference.

Halo is interested in licensing these patents, and would like to solicit your company's interest in entering into negotiations for the license of these patented technologies.

We would appreciate knowing of your interest by the end of the month. Thank you for your attention to this matter.

Very truly yours,

/s/ Robert A. Spanner
Robert A. Spanner

RAS:rs
2306251

Encl.

UNITED STATES DISTRICT COURT
DISTRICT OF NEVADA

(Admitted Into Evidence On 11/7/12)

Plaintiff's Trial Exhibit
PTX 92
2:07-cv-00331-PMP

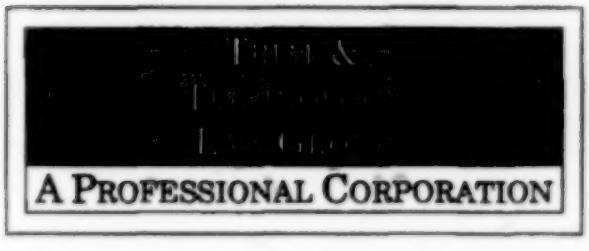

545 MIDDLEFIELD ROAD
SUITE 220
MENLO PARK, CALIFORNIA
94025

TELEPHONE: (650) 324-2223
FACSIMILE: (650) 324-0178
URL: WWW.TECHTRIALLAW.COM
E-MAIL: INFO@TECHTRIALLAW.COM

Robert A. Spanner
Direct Dial Number: (650) 324-2277
E-mail: ras@techtriallaw.com

August 6, 2002

John Kowalski, President
Pulse Engineering
12220 World Trade Drive
San Diego, CA 92128

Re: **Halo Electronics, Inc.**

Dear Mr. Kowalski:

A month ago we wrote on behalf of Halo Electronics, Inc. ("Halo") to notify you of certain surface mount packaging patents the company has recently

acquired, and of its interest in licensing these patents.

There is reason to believe that surface mount products manufactured by your Company which are not of transfer molded construction may possess features similar to those embodied in the patented devices described in Halo's patents previously provided to you. Halo has not yet reached any conclusive determinations as to whether your company's products are covered by its patents; rather, Halo is devoting its energy to working out suitable arrangements with companies that would benefit from licensing Halo's patented technologies. We believe that Pulse Engineering is one such firm.

Please advise us whether your company would be interested in entering into negotiations for the license of Halo's technologies described in Halo's patents previously provided.

Very truly yours,

/s/ Robert A. Spanner
Robert A. Spanner

RAS:rs
2306251

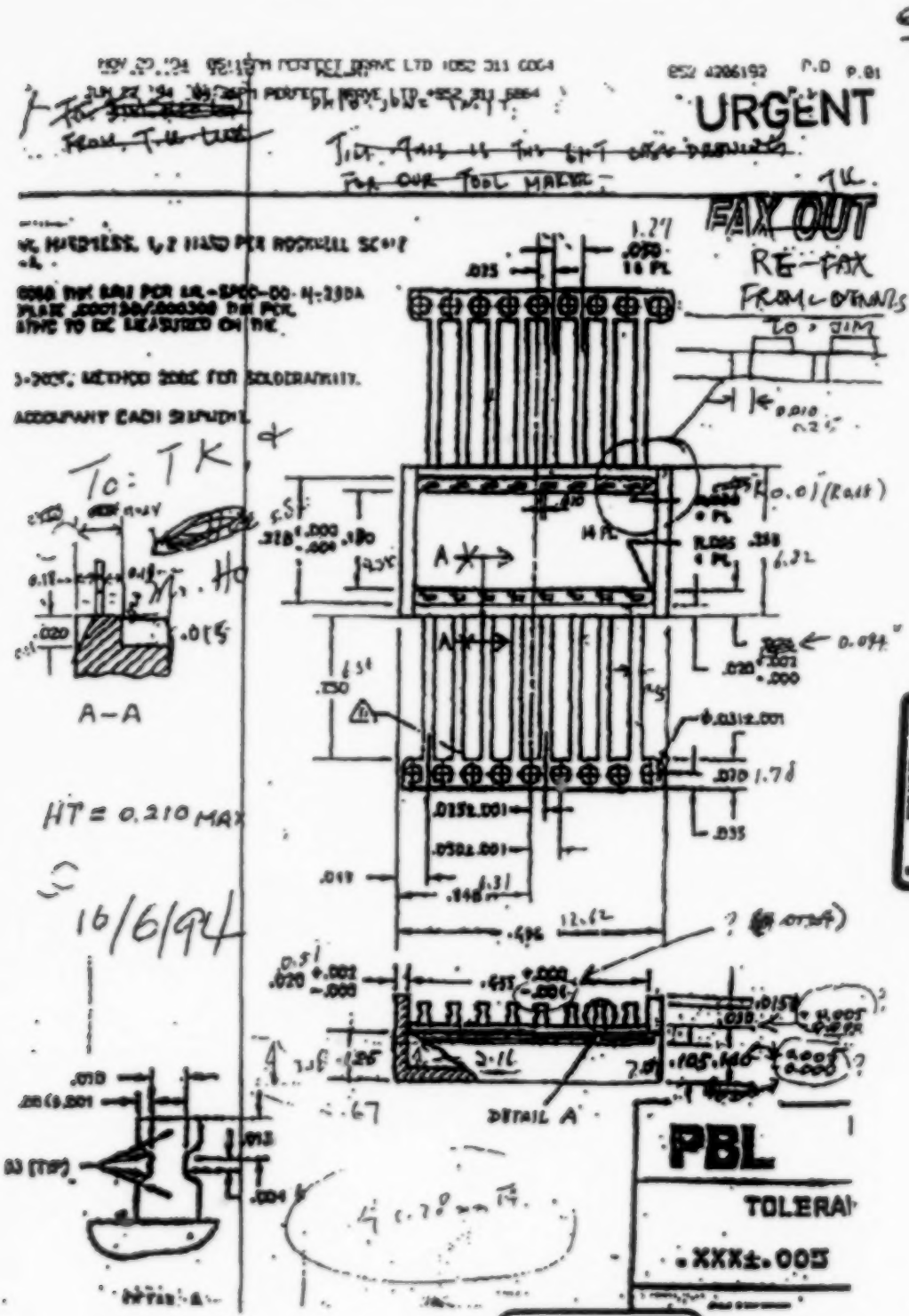

Plaintiff's Trial Exhibit
PTX 123
2:07-cv-00331-PMP

FROM : PETER LU PHONE NO. : 214 355 3296 P01

FROM ...

JIM, THIS IS THE LAST ... FOR OUR TOOL MAKER. TK

...HARDNESS, 1/2 HARD PER ROCKWELL SCALE R-4.

...00050 THK MIN PER MIL-SPEC-00-N-290A ...PLATE .000150/.000300 THK PER ...LATING TO BE MEASURED ON THE

...10-202F, METHOD 208E FOR SOLDERABILITY.

...ACCOMPANY EACH SHIPMENT.

11/28/94

(.228 - .180)/2

= 0.024 Wall thickness

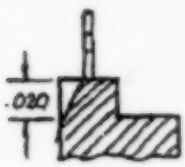

A—A

HT = 0.210 MAX

10/6/94

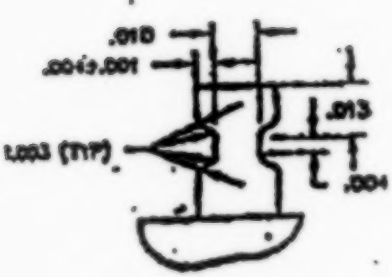

DETAIL A

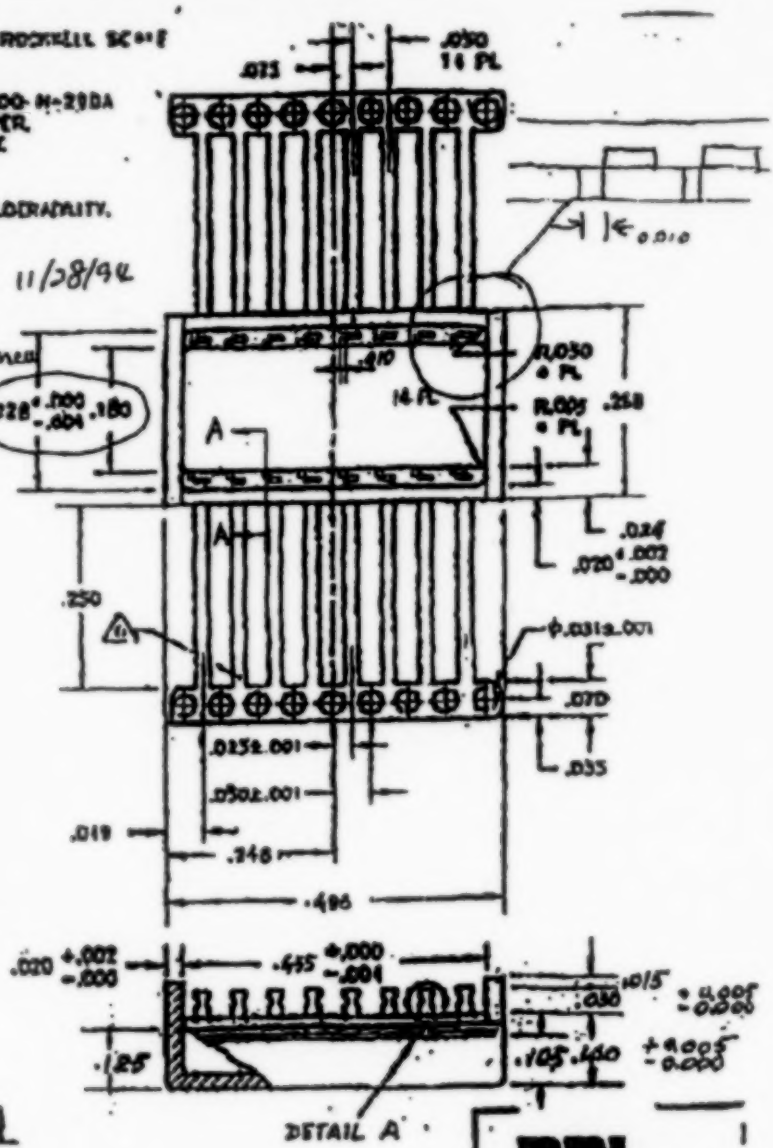

PBL

TOLERAI

.XXX±.005

SHEET

UNITED STATES DISTRICT COURT DISTRICT OF NEVADA

(Admitted Into Evidence On 11/14/12)

DTX-512

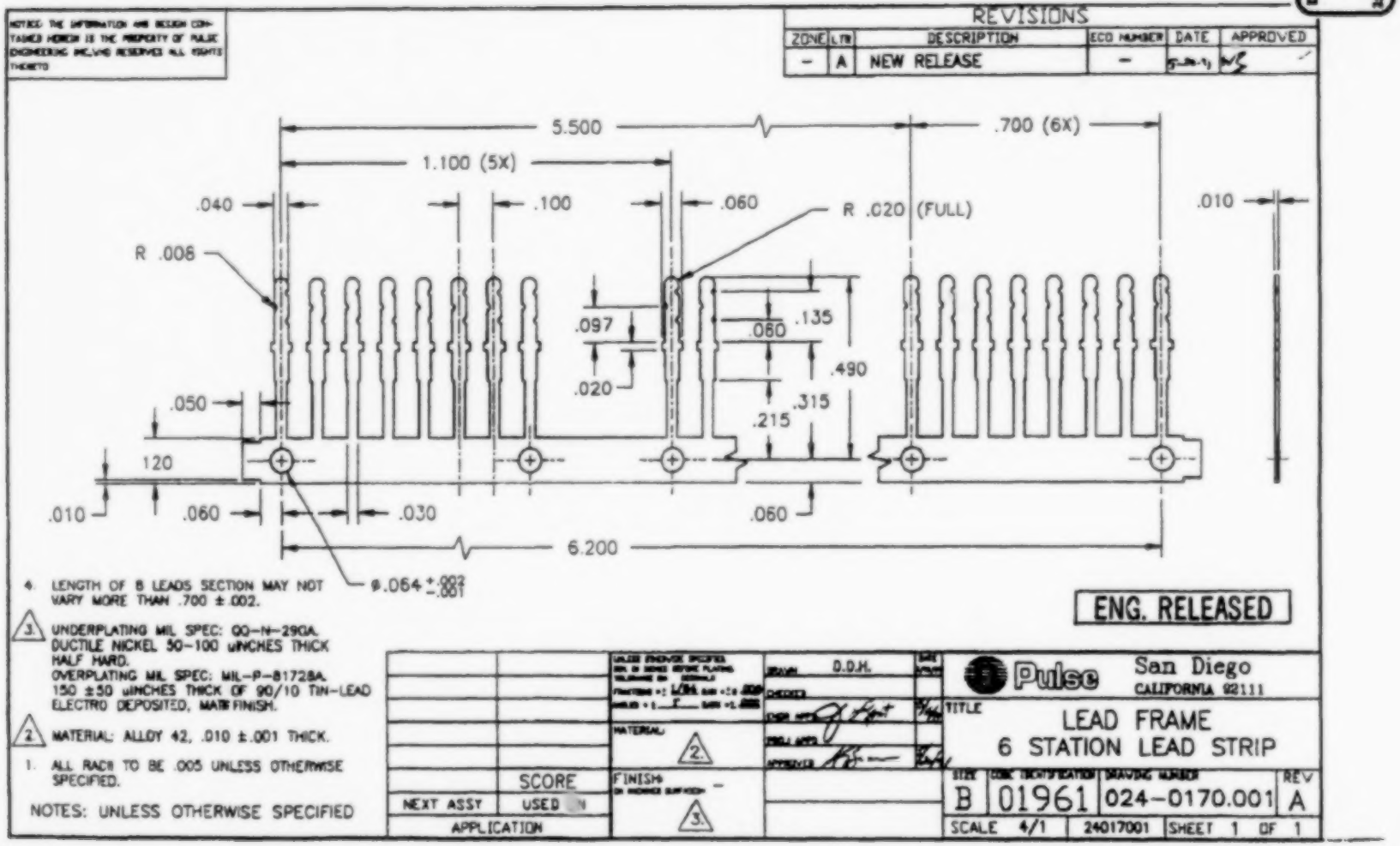

UNITED STATES DISTRICT COURT DISTRICT OF NEVADA

(Admitted Into Evidence On 11/14/12)

Defendants' Trial Exhibit

DTX-526

2:07-cv-00331-PMP-PAL

4 3 2 1

Pulse Engineering, Inc. **CUSTOMER** ROCKWELL **PE-** 64309
San Diego, California 92112 **JOB NUMBER** _____ **REV** N
8-31-88

LIST OF MATERIALS

ITEM NO.	QTY REQD	PART NUMBER	DESCRIPTION	SPECIFICATIONS OR NOTES
1	4	WCI-64309	WOUND COIL SUBASSEMBLY	
2	1	043-0961.001	HEADER:	24 PIN
3				
4				
5	A/R	082-0007.001	INK: MARKEM UV #9060	WHITE
6	A/R	083-0044.001	SOLDER: 40/60 BAR	
7	.0007#	081-0176.001	SYLGARD: 1-2577	
8	.00002#	081-0174.002	CATALYST: 176	DOW CORNING
9	.062	075-0044.001	SHIPPING TUBE:	
10	.124	075-0062.001	THUMB TACK:	MERITEX
11	A/R	083-0058.003	SOLDER: 40/60 0.028 DIA.	

TEST FIXTURES AND/OR PROCEDURES

JM-17880	FORMING & TRIMMING DIE.	ENG. RELEASED
P-20637	GENERAL MANUFACTURING PROCEDURE.	
P-21153	PROCEDURE. PACKAGING.	
P-21154	MANUFACTURING PROCEDURE	

NOTES: UNLESS OTHERWISE SPECIFIED –

1.0 IN THE EVENT OF CONFLICT BETWEEN THIS SPECIFICATION AND THE CUSTOMER SPECIFICATION, THE LATTER SHALL GOVERN.

2.0 INTERPRET THIS SPECIFICATION PER MIL-D-1000 AND STANDARDS REFERENCED THEREIN.

3.0 ALL TEST CONDITIONS PER MIL-STD-202, PARA 2.2, EXCEPT TEMPERATURE TO BE 25 ± 5° C.

THIS RELEASE
SUPERSEDES REV. _____
RETURN REVISION _____
TO PRODUCTION CONTROL

8

LTR	DESCRIPTION	ECO NO.	DATE	APPROVED
N	L/M QTY. ITEM 10	20920	3/31/88	LR/av
M	CHANGE PER ECN	20790	7/12/88	LR/av
L	CHANGE PER ECN	20454	02/16/00	LEON/av
K	CHANGE PER ECN	29977	9/4/87	FL/av
J	CHANGE PER ECN	29814	6/30/87	FL/av
H	CHANGE PER ECN	29746	6/10/87	LR/[illegible]
G	CHANGE PER ECN	29718	5/20/87	FL//a Mers
F	CHANGE PER ECN	29522	3/6/87	LR/BL
D	CHANGE PER ECN	29402	12/2/86	LR/BL
C	L/M ITEM-6 WAS 083-0011	29301	10/3/86	LR/av
B	CHANGE PER ECN	29230	8/23/86	LR/MM.
A	L/M ADDED ITEMS 9 & 10	29145	7/21/86	LR/MM.

	REV STATUS	REVISION	N	F	M																						
	OF SHEETS	SHEET	1	2	3	4	5	6	7	8	9	10	11	12	13	14	15	16	17	18	19	20	21	22	23		

NOTICE: THE INFORMATION AND DESIGN CONTAINED HEREIN IS THE PROPERTY OF PULSE ENGINEERING, INC. AND RESERVES ALL RIGHTS THERETO.	UNLESS OTHERWISE SPECIFIED, DIMENSIONS IN INCHES BEFORE PLATING. TOLERANCES ON: FRACTIONS = ± _____ – ANGLES = ± _____ – DECIMALS: 0.XX = ± .010 0.XXX = ± .005	[ILLEGIBLE]	DATE 6/10/86	**Pulse Engineering, Inc.** San Diego, California 92112	
		CHECKED		TITLE SURFACE MOUNT PULSE TRANSFORMER	A
		ENGRG APPS [Illegible]	6/19/86		
		PROS APPS			
		APPROVED [Illegible]	7/1/86	SIZE B / CODE IDENTIFICATION 01961 / DRAWING NUMBER PE-64309 / REV N	
	REF: CUSTOMER ROCKWELL DRAWING 251-8079-010 REV E DATE _____ ☐ EXCEPTIONS; NOTE _____			SCALE = NONE	SHEET 1 of 3

F20065-1

WINDING DATA

MANDREL: _____ FORM: _____ CORE: _____

WINDING				
WIRE SIZE				
TRAVERSE				
TURNS PER LAYER	SEE WCI 64309			
LAYER INSULATION	FOR LATEST DESIGN			
NUMBER OF LAYERS				
TOTAL TURNS				
WRAPPER				
LEAD IDENTIFICATION				

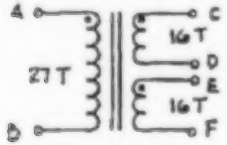

WDG. DIAGRAM

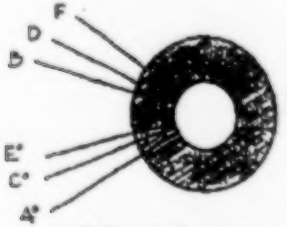

TYP. LEAD BREAKOUT

FIG. 1

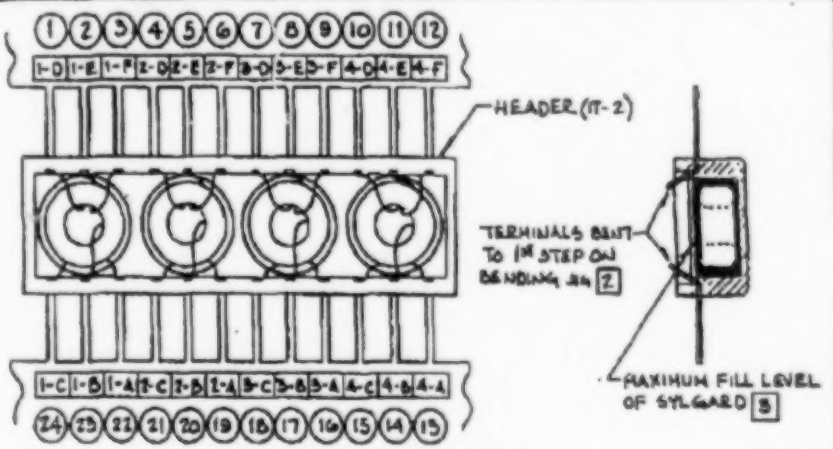

ASSEMBLY VIEW FIG. 2

ASSEMBLY NOTES

1.0 INSERT 4 COATED COILS INTO BOBBIN & TERMINATE EACH PART PER FIG. 2, COIL SHOULD BE HELD ON PLACE WITH A SMOOTH WOODEN ROD.

2 AFTER ALL COILS ARE TERMINATED, SOLDER ALL CONNECTIONS WITH ITEM-6, DIP SOLDER, BEND INTERNAL TERMINALS DOWN (1ST STEP), CLEAN EXCESS FLUX USING ULTRASONIC CLEANER. DO NOT USE BRUSHES!!

3 COAT COILS WITH ITEMS 7&8, CURE 20 MIN. @ 75°C ± 5°C.

4.0 STAMP UNITS PER FINAL OUTLINE.

5.0 BEND LEADFRAME TO POSITION SHOWN IN FINAL OUTLINE, USE JIG JH-17880 FORMING AND TRIMMING DIE TO SHIP TUBE. NOTE: PARTS MUST BE TRANSPORTED & HANDLED WITH CARE AFTER THIS POINT TO ASSURE THAT DIE PINS DO NOT BECOME MISALIGNED. HANDLE & TRANSPORT IN SHIPPING TUBES ONLY

□ = NUMBERS IN SQUARES EQUAL CORE NUMBER AND LEAD IDENTIFICATION 1-A ID CORE NUMBER 1 AND LEAD A.

○ = CIRCLE NUMBERS EQUAL TERMINAL NUMBERS.

6.0 TEST 100% PER TEST NOTES: 1.0 & 6.0

7.0 SAMPLE TEST PER TEST NOTES: 1.0, 3.0, 4.0, 5.0, 7.0 &

SIZE	DWG. NO.	REV
B	01961	64309

SCALE: NONE SHEET 2 OF 3

NOTICE: THE INFORMATION AND DESIGN CONTAINED HEREIN IS THE PROPERTY OF PULSE ENGINEERING, INC. AND RESERVES ALL RIGHTS THEREIN.

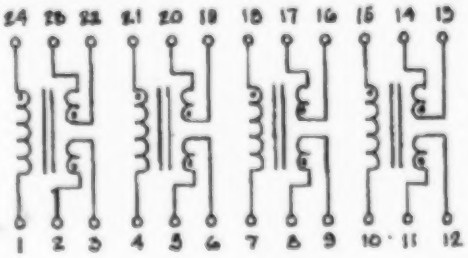

SCHEMATIC

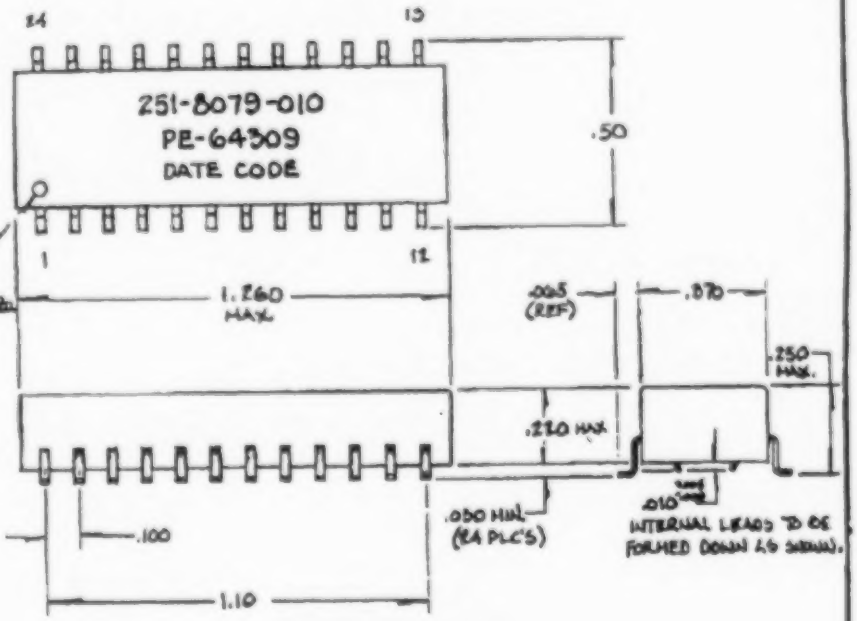

FINAL OUTLINE

FIG. 3

TEST NOTES

1.0 TURNS RATIO:
$\frac{24-1}{22-23} = \frac{2-3}{21-23} = \frac{21-4}{19-20} = \frac{5-6}{19-20} = \frac{18-7}{16-17} = \frac{8-9}{16-17} = \frac{15-10}{13-14} = \frac{11-12}{13-14} = .588 \pm 2\%$

2.0 INDUCTANCE: .04 VRMS @ 1 KHz
(13-14) = (16-17) = (19-20) = (22-23) = 0.8 mH MIN.

3.0 LEAKAGE INDUCTANCE: 100 KHz, .02 VRMS HP4277A
(22-23) TO (24-1) (2-3) SH
(19-20) TO (21-4) (5-6) SH
(16-17) TO (18-7) (8-9) SH
(13-14) TO (15-10) (11-12) SH
} = 1.5 μH MAX.

4.0 C$_{WW}$: 100 KHz, .02 VRMS HP4277A
PRIMARIES TO SECONDARIES = 40 PF MAX.

5.0 D.C. RESISTANCE:
(22-23) = (19-20) = (16-17) = (13-14) = 0.8 Ω MAX.
(24-1) = (21-4) = (18-7) = (15-10)
(2-3) = (5-6) = (8-9) = (11-12)
} = 0.2 Ω MAX.

6.0 HIPOT:
WINDING TO WINDING = 200 VRMS 60 SEC
220 VRMS 1 SEC

7.0 RISE TIME: 9 NS MAX.

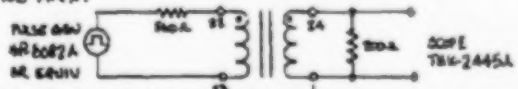

8.0 ET: (22-23) = (19-20) = (16-17) = (13-14) = 4 V μSEC MIN.

9.0 PACKAGING: SEE PROCEDURE P-2113,

10.0 I.R.
WINDING TO WINDING = 100 MEGOHMS MIN. 200 VDC.

SIZE	CAGE IDENTIFICATION	DRAWING NUMBER	REV
B	01961	64309	M
SCALE: NONE		SHEET 3 of 3	

P30064-B

UNITED STATES DISTRICT COURT
DISTRICT OF NEVADA

Defendant's Trial Exhibit
DTX 533
2:07-cv-00331-PMP-PAL

ELECTRONIC PACKAGING AND INTERCONNECTION HANDBOOK

CHARLES A. HARPER
EDITOR IN CHIEF

TECHNITROL-PULSE
4187903

DTX-533

PLACE HOLDER

(BOOK)

[Bar Code]

ELECTRONIC PACKAGING AND INTERCONNECTION HANDBOOK

CHARLES A. HARPER
EDITOR IN CHIEF

TECHNITROL-PULSE
4187903

ELECTRONIC PACKAGING AND INTERCONNECTION HANDBOOK

Charles A. Harper Editor-in-Chief
Technology Seminars, Inc., Lutherville, Maryland

McGRAW-HILL, INC.
New York St. Louis San Francisco Auckland Bogotá Caracas Hamburg Lisbon London Madrid Mexico Milan Montreal New Delhi Paris San Juan São Paulo Singapore Sydney Tokyo Toronto

Library of Congress Cataloging-in-Publication Data

Electronic packaging and interconnection handbook / Charles A. Harper, editor-in-chief.
p. cm.
Includes bibliographical references and index.
ISBN 0-07-026684-0

1. Electronic packaging – Handbooks, manuals, etc.
I. Harper,
Charles A.
TK7870.15.E42 1991
621.381'046 – dc20 90-24109
CIP

Copyright © 1991 by McGraw-Hill, Inc. All rights reserved. Printed in the United States of America. Except as permitted under the United States Copyright Act of 1976, no part of this publication may be reproduced or distributed in any form or by any means, or stored in a data base or retrieval system, without the prior written permission of the publisher.

1 2 3 4 5 6 7 8 9 0 DOC/DOC 9 8 7 6 5 4 3 2 1

ISBN 0-07-026684-0

The sponsoring editor for this book was Daniel A. Gonneau, the editing supervisor was Ingeborg M. Stochmal, and the production supervisor was Suzanne W. Babeuf. This book was set in Times Roman. It was composed by McGraw-Hill's Professional Book Group composition unit.

Printed and bound by R. R. Donnelley & Sons Company.

Information contained in this work has been obtained by McGraw-Hill, Inc., from sources believed to be reliable. However, neither McGraw-Hill nor its authors guarantees the accuracy or completeness of any information published herein, and neither McGraw-Hill nor

its authors shall be responsible for any errors, omissions, or damages arising out of use of this information. This work is published with the understanding that McGraw-Hill and its authors are supplying information but are not attempting to render engineering or other professional services. If such services are required, the assistance of an appropriate professional should be sought.

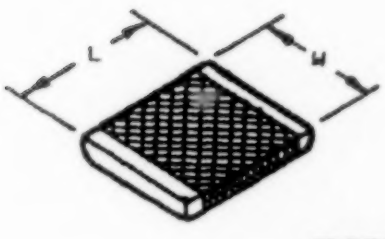

INCH
MM

CASE SIZE	L	W
0805 2012	.017 2.00	.049 1.25
1206 3216	.126 3.20	.063 1.60
1210 3225	.126 3.20	.098 2.50

FIGURE 9.21 Standard Multilayer inductors.

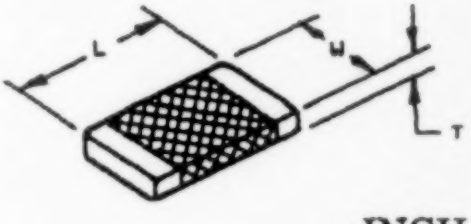

INCH
MM

CASE SIZE	L	W	T
0805 2012	.079 2.00	.049 1.25	.035 .900
1206 3216	.126 3.2	.063 1.60	.043 1.09
1210 3225	.126 3.20	.098 2.50	.051 1.29
1812 4532	.177 4.50	.126 3.20	.059 1.50

FIGURE 9.22 Standard chip ferrite beads.

9.2.2.4 Transformers. Small conventional transformers have been converted to SMT. There are many configurations available in closed-case and open-case packages (Fig. 9.23).

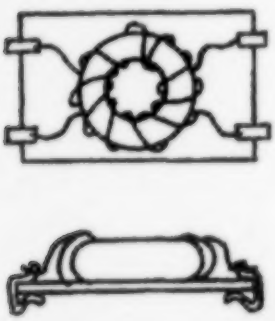

FIGURE 9.23 Open-frame transformer.

9.2.2.5 Crystals. Leaded surface-mount crystals are supplied in various packages, including ceramic and high-temperature plastic.

9.2.2.6 Other Components. Hermetically sealed lithium batteries are available in SMT case sizes of 16 by 16 by 7.5 mm with a 3-V cell capacity up to 5000 mA. Surface-mount fuses are available in 0.5- to 5-A ratings.

9.2.2.7 Connectors. Surface-mount connectors are required to have the following unique features, which are not normally found in traditional connectors:

1. Surface attachment of connection to substrate
2. Large I/O pin count, 300 and up
3. Low profile

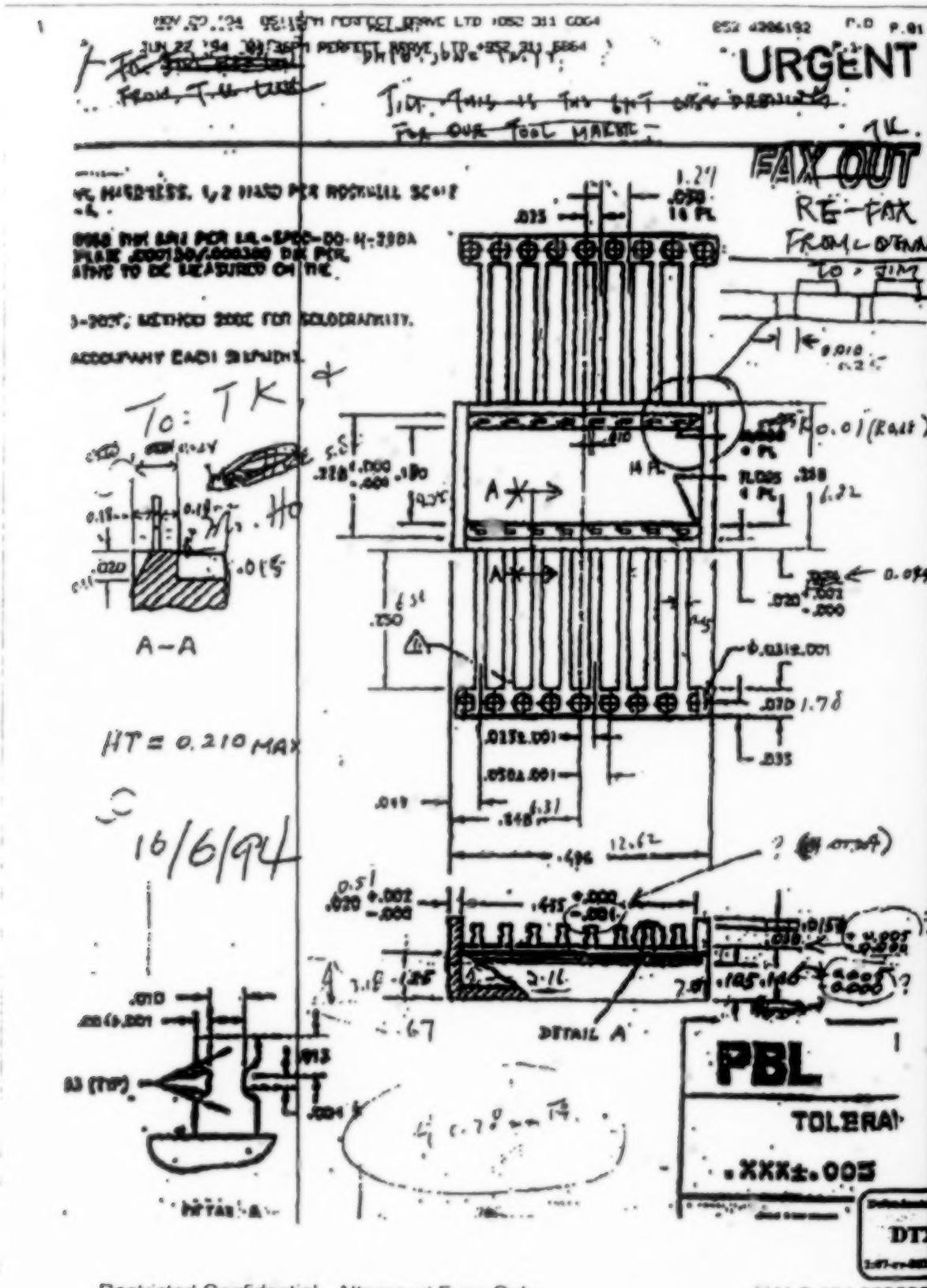
URGENT
FAX OUT
RE-FAX
FROM DENNIS
TO: TK
A-A
HT = 0.210 MAX
16/6/94
DETAIL A
PBL
TOLERAN
.XXX±.005

FROM : PETER LU PHONE NO. : 214 355 3296

FROM: T.W.

JIM: THIS IS THE LMI CASE ...
FOR OUR TOOL MAKER.

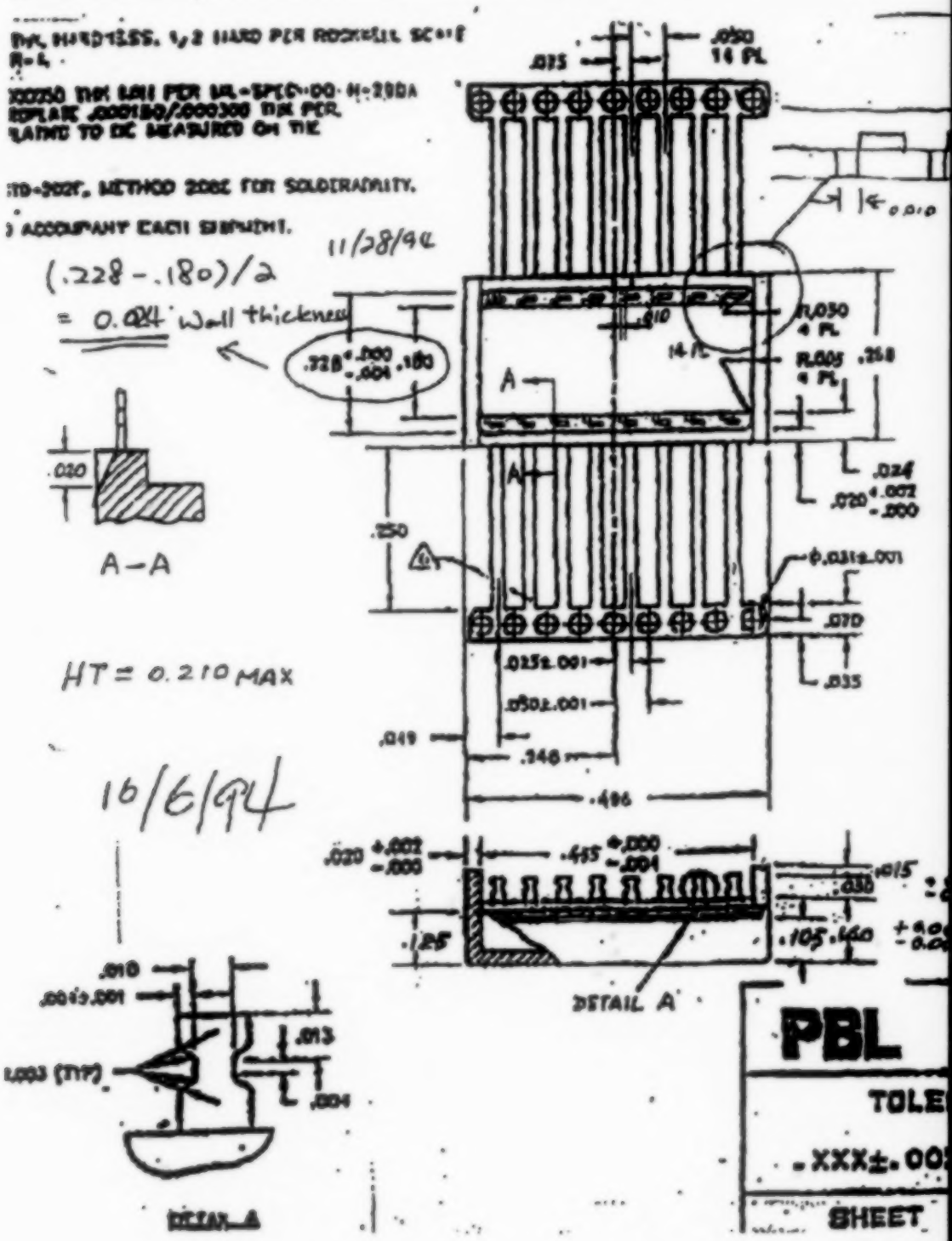

UNITED STATES DISTRICT COURT DISTRICT OF NEVADA

(Admitted Into Evidence On 11/7/12)

Defendants' Trial Exhibit

DTX-559

2:07-cv-00331-PMP-PAL

DWG NO	SHT	REV
300-0010	1	[Illegible]

		REVISIONS				
		REV	DESCRIPTION	DATE	APPROVED	RELEASED
		X	PROTO RELEASE	10/26/89	B	L Lam
		A	PRODUCTION RELEASE RED 12-10-85	12/14/89	P.B.	

To: Neal Lam
Attn: Mr. Andy Lam
From: Randy [Illegible] – Valor East

NOT RELEASED
FOR REFERENCE ONLY

CANCELLED

SPECIFICATION CONTROL DRAWING

[ILLEGIBLE]	UNLESS OTHERWISE SPECIFIED			APPROVALS	DATE	[LOGO] VALOR		
	TOLERANCES ARE			DRAWN BY	10-26-83	[Illegible]		
						]Illegible]		
	INCHES	METRIC	ANGLES	CHECK BY	[Illegible]	[Illegible]		
	.X ± .1	[Illegible]	X. ± [Illegible]					
[ILLEGIBLE]	.XX ± .020			DSGN BY	[Illegible]	TITLE		
(First [Illegible]	.XXX ± .558	[Illegible]	X.X ± [Illegible]	PB		LEAD [Illegible]		
	DO NOT SCALE DRAWING			PROJ ENGR BY	[Illegible]	RECEIVED		
	MATERIAL			SAFETY				
[ILLEGIBLE]	[1]			QA	32108183	SIZE	CODE IDENT NO.	DRAWING NO. / REV
[Illegible]				[Illegible]		A	15003	300-0010 / A
	FINISH			[Illegible]	10/25/9	[Illegible]		SHT
	[2]			PB		None		OF
				[Illegible] ENGR	10/25/9			[Illegible]
				PB				

0025

300-0010 PL 2

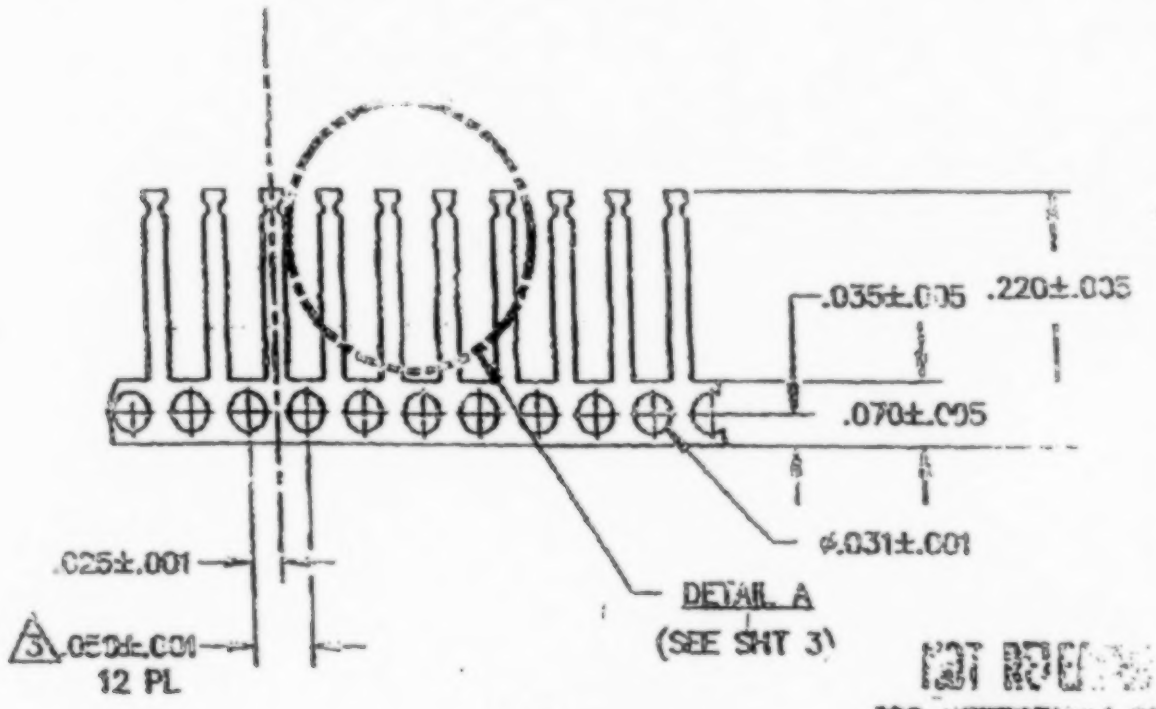

NOT REFERENCE
FOR REFERENCE ONLY

CANCELLED

RECEIVED

SPECIFICATION CONTROL DRAWING

A	13003	300-001
NONE		

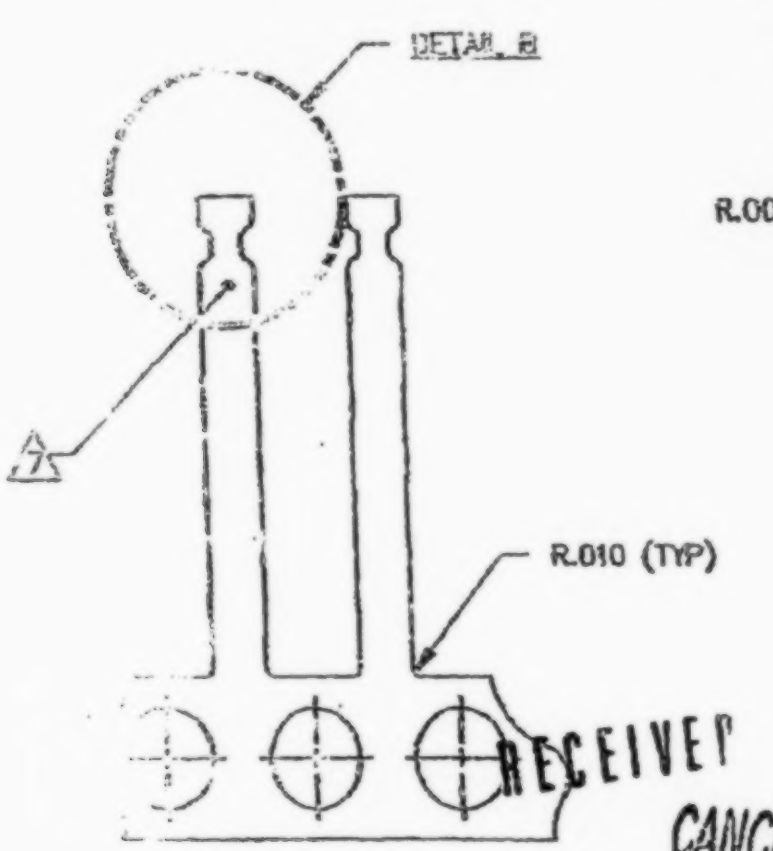

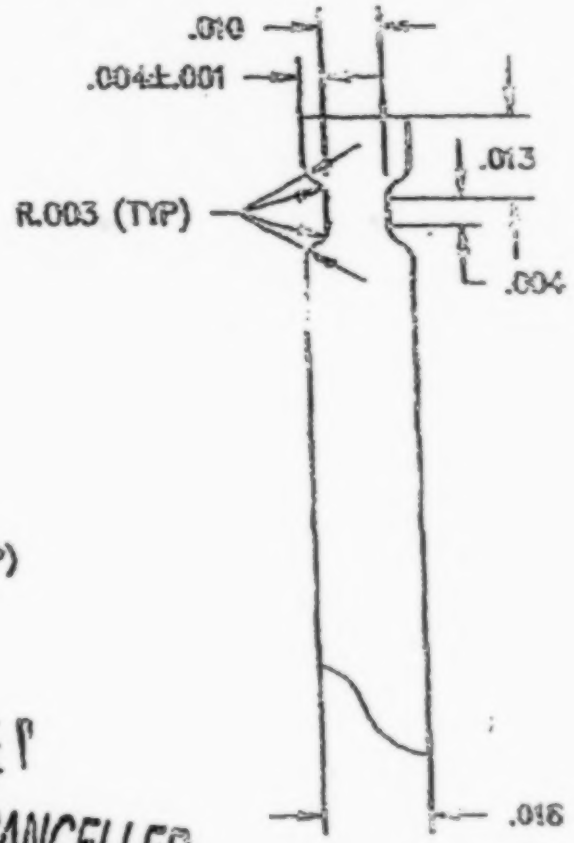

DETAIL A
(SEE SHT 2)

DETAIL B

RECEIVED
CANCELLED

SPECIFICATION CONTROL DRAWING

SIZE			
A	15003	300-0010	A

SCALE NONE

DWG NO.	SHT	REV
300-0010	4	A

NOTES:

1. ALLOY 42, .00764±.0086 THK, HARDNESS, 1/2 HARD PER ROCKWELL SCALE.
2. [ILLEGIBLE] NICKEL AT .000050 THK MIN PER MIL-SPEC-00-N-200A THICKNESS OF PLATING TO BE MEASURED ON THE SHOULDER OF THE LEADFRAME
3. ACCUMULATION NOT TO EXCEED 1.200±.002 OVER 24 LEADS.
4. LEAD FRAME MUST PASS MIL-STD-202, METHOD 208F FOR SOLIDERABILITY.
5. CERTIFICATE OF COMPLIANCE TO ACCOMPANY EACH SHIPMENT.
6. GRINDER – 1/4 INCH MAX OVER 18 INCHES.
7. [ILLEGIBLE] CHECK POINT.
8. MAXIMUM BURR OF .001.

CANCELLED

RECEIVED

NOT RELEASED
FOR REFERENCE ONLY

SPECIFICATION CONTROL DRAWING

SIZE	CODE IDENT NO.	DRAWING NO.	REV
A	15003	300	A

SCALE		SHT	OF
NONE		4	5

DWG NO.	SHT	REV
300-0010	5	A

APPROVED VENDOR LIST		
VENDOR	PART NO.	NOTES
ONE TECH	SK-09-0081	

CANCELLED

RECEIVED

NOT RELEASED
FOR REFERENCE ONLY

SPECIFICATION CONTROL DRAWING

	SIZE	CODE IDENT NO.	DRAWING NO.	REV
	A	15003	300	
	SCALE NONE		SHT	OF

Defendant's Trial Exhibit
DTX-563
2:07-cv-00331-PMP-PAL

UNITED STATES DISTRICT COURT
DISTRICT OF NEVADA

(Admitted Into Evidence On 11/15/12)

DWG NO ST7047	SHT 1	REV 03

REVISIONS

REV	DESCRIPTION	DATE	APPROVED	RELEASED
01	PILOT RELEASE *4/2/93 C.M.*	4/2/93	RAL	3/31/93
02	PER ECO VS0214 *4/15/93 C.M.*	4/28/93	TD	YVONNE
02	PER ECO VS0262 *5/20/93 G.M.*	5/25/93	TD	L. KARR

ATTENTION
ALL SHEETS OF THIS DOCUMENT, EXCEPT FOR COVER SHEET, MECHANICAL SPEC. & ELECTRICAL SPEC. ARE CONTROLLED DOCUMENTATION AND ARE NOT TO BE DISTRIBUTED OUTSIDE OF VALOR OR ITS SUBCONTRACTORS.

UNLESS OTHERWISE SPECIFIED:
DIMENSIONS ARE INCHES
TOLERANCES ARE:

INCHES	METRIC	ANGLES
.x ±.03	[x.xx] ±.13	x. ±1.0°
.xx ±.02	[x.x] ±.5	x.x±9.30°
.xxx ±.005		

DO NOT SCALE DRAWING

MATERIAL
[1] SHT 3

FINISH
[2] SHT 3

APPROVALS	DATE
DRAWN BY C. MATA	*6/5/92*
CHECK BY L.CHAVEZ	*6/9/92*
DSGN BY ——	—
PROJ ENGR T.WEISLER TD	*6/9/92*
ENGR MGR AL PETERSEN	*6/9/92*
G.A. TOM K.	*3/31/93*
MFG ENGR JAVIER	*3/31/93*

[LOGO] VALOR
VALOR ELECTRONICS, INC. 8715 BUSINESS PARK AVE. SAN DIEGO, CA 02131

TITLE
TRANSFORMER, LAN

SIZE	CODE IDENT. NO.	DRAWING NO.	REV
A	15003	ST7047	03

SCALE		SHT OF
NONE		1 8

DWG NO ST7047	SHT 2	REV 03

DASH NO.	CUSTOMER		
	CUSTOMER	P/N	REV
—	CATALOG	N/A	N/A
001	CATALOG	N/A	N/A

CONFIGURATION SPECIFICATIONS

FOR INTERNAL USE ONLY

SIZE	CODE IDENT. NO.	DRAWING NO.	REV
A	15003	ST7047	03

SCALE		SHT	OF
NONE		2	8

DWG NO ST7047 SHT 3 REV 03

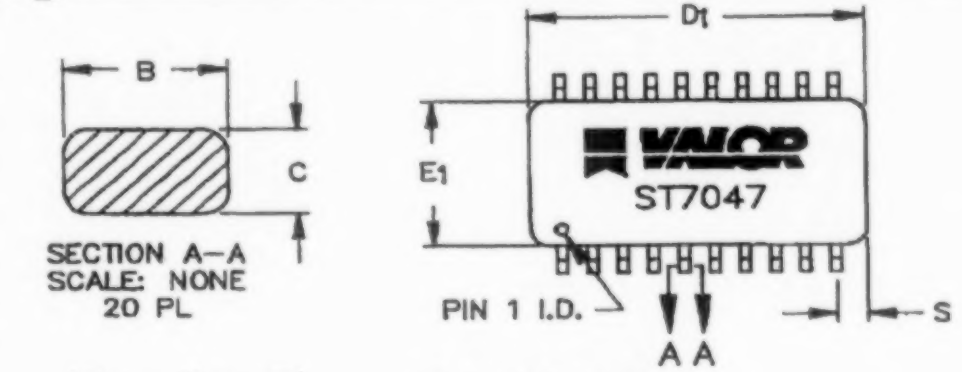

DIM	INCHES MIN	INCHES MAX	MILLIMETERS MIN	MILLIMETERS MAX
A	.205	.225	5.21	5.72
A_1	.004	.010	.10	.25
B	.016	.020	.41	.51
C	.008	.012	.20	.30
D_1	.590	.610	14.99	15.49
E_1	.280	.280	6.60	7.11
e	.045	.055	1.14	1.40
eA	.445	.455	11.30	11.56
H	.360	.380	9.14	9.65
K	.015	.025	.38	.64
L	.045	.055	1.14	1.40
θ	0°	8°	0°	8°
S	.070	.080	1.78	2.03

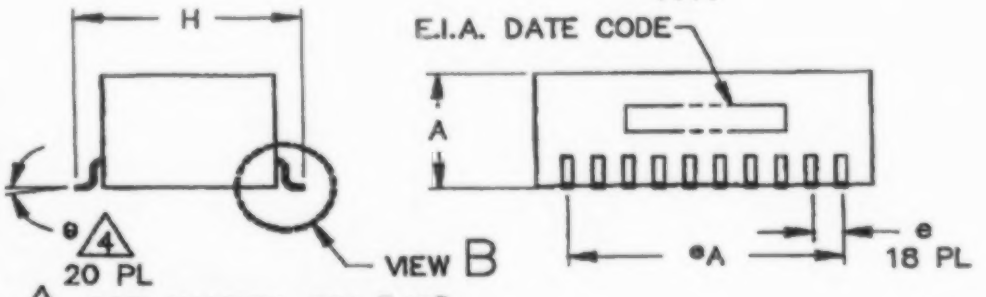

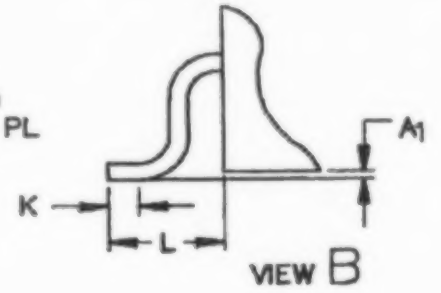

4 COPLANARITY .004 [.10].

3. LETTER DESIGNATIONS FOR PACKAGE DIMENSIONS CONFORM TO JEDEC PUBLICATION NO.95 SECT 2.2.

2 LEAD : SOLDERABILITY PER MIL–STD–202, METHOD 208.

1 CASE : BLACK PLASTIC, SELF–EXTINGUISHING PER UL94V–0.
LEAD : KOVAR, ALLOY 42 OR EQUIVALENT.

NOTES: UNLESS OTHERWISE SPECIFIED

MECHANICAL

SIZE	CAGE CODE NO.	DRAWING NO.	REV
A	15003	ST7047	03
SCALE NONE		SHT 3 OF 8	

DWG NO ST7047 SHT 4 REV 03

SECONDARIES

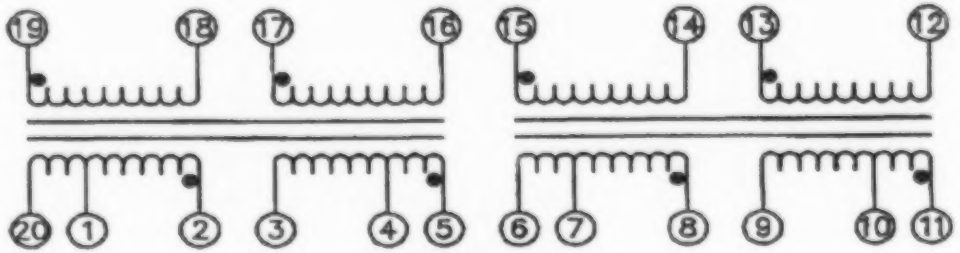

PRIMARIES

PERFORMANCE SPECIFICATIONS @ 25°C

HIPOT	: 500VRMS (WINDING – WINDING)		
DCR (PRIMARIES)	: 0.4Ω MAX		
(SECONDARIES)	0.8Ω MAX		
* INSERTION LOSS	: –0.5dB MAX, 1 – 20MHz (EACH TRANSFORMER)		
* RETURN LOSS (1 – 8MHz)	: 22dB MIN	}	THRU BOTH TRANSFORMERS IN
(8 – 16MHz)	20dB MIN	}	LOOP–BACK CONNECTION.
(16 – 24MHz)	18dB MIN	}	

* INSERTION LOSS AND RETURN LOSS SPECIFICATIONS BASED ON 150Ω LOAD ON ONE SECONDARY FOR EACH TRANSFORMER AND PRIMARIES DRIVEN FROM 150Ω SOURCE TO 20–5 OR 6–11 OR FROM 100Ω SOURCE TO 1–4 OR 7–10, WITH 2–3 CONNECTED AND 8–9 CONNECTED.

ELECTRICAL

SIZE	CAGE SHT NO.	DRAWING NO.	REV
A	15003	ST7047	03
SCALE NONE		SHT 4 OF 8	

[LOGO]		001	002	03	BILL OF MATERIALS			CODE IDENT NO. 15003	DWG NO ST7047	SHT 5	REV 03
ITEM	QTY	QTY	QTY	QTY	U/M	PART NO	REV	DESCRIPTION			
1	2	2			EA	011-0103		CORE, TOROID, FERRITE COATED			
2	1	1			EA	110-0294		CASE, 20 PIN			
3	.0002	.0002			LB	121-3642		WIRE, #36HN, BLUE			
4	.0002	.0002			LB	121-3692		WIRE, #36HN, CLEAR			
5	1.5	1.5			FT	123-3722		WIRE, DUAL, #37HN, RED AND GREEN			
6	AR	AR			LB	180-2701		SOLDER, 10/88/2			
7	AR	AR			GAL	200-0001		EPOXY			
8	AR	AR			GAL	205-0001		HARDENER			
9											
10	AR	AR			OZ	220-0001		INK, WHITE MARKING			
11	.032	—			EA	999-4111		TUBE, SHIPPING			
12	.064	—			EA	999-4086		PIN, SHIPPING TUBE			
13	REF	REF				TPST7047		TEST PLAN			
14	1	1			EA	300-0031		LEADFRAME, 20-PIN, SINGLE FRAME			
15	—	.002			EA	510-4003		ASSY, TAPE AND REEL			
16	REF	REF			EA	006-0359		ARTWORK, UNIT ID			
17	AR	AR			OZ	220-0004		INK, WHITE SILKSCREEN			
18	REF	REF			EA	300-0010		LEADFRAME (ALT ITEM 14)			
19	AR	AR			GAL	207-0002		GEL, DIELECTRIC, PART A			
20	AR	AR			GAL	207-0003		GEL, DIELECTRIC, PART B			
21											
22											
23											
24											
25											
26											
27											

DWG NO ST7047 SHT REV 03

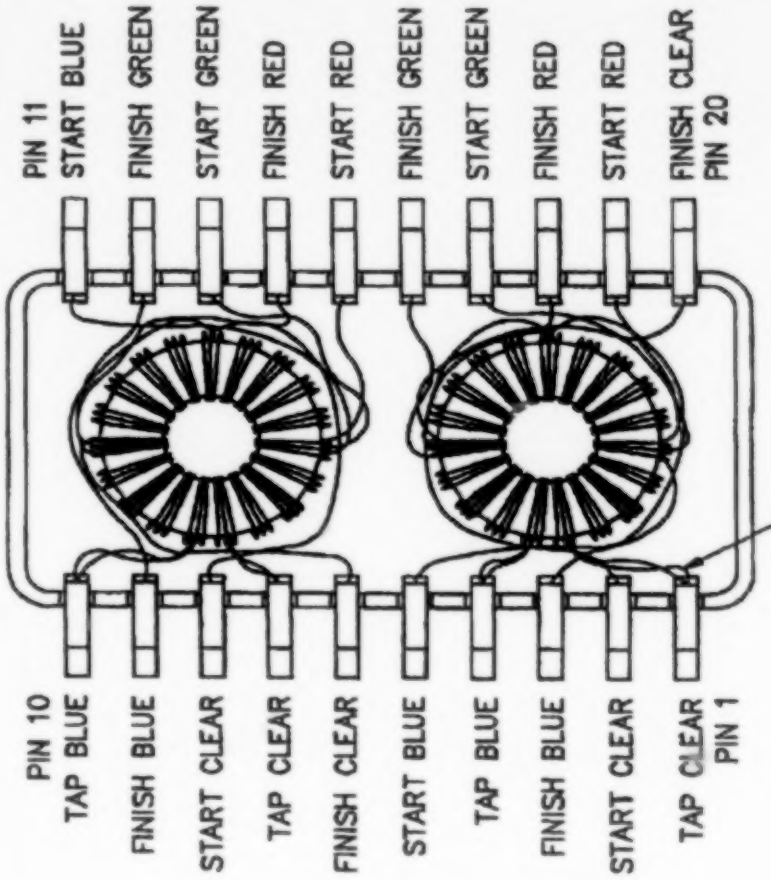

INSTALLATION INSTRUCTIONS

1. ASSEMBLE PER VALOR SPEC #000-0019. SOLDER EACH PAIR OF TAP LEADS UP TO WITHIN 0.1 INCH OF THE CORE.

ASSEMBLY

SIZE	CAGE IDENT NO.	DRAWING NO.	REV
A	15003	ST7047	03
SCALE NONE		SHT 6 OF 8	

DWG NO ST7047 SHT REV 03

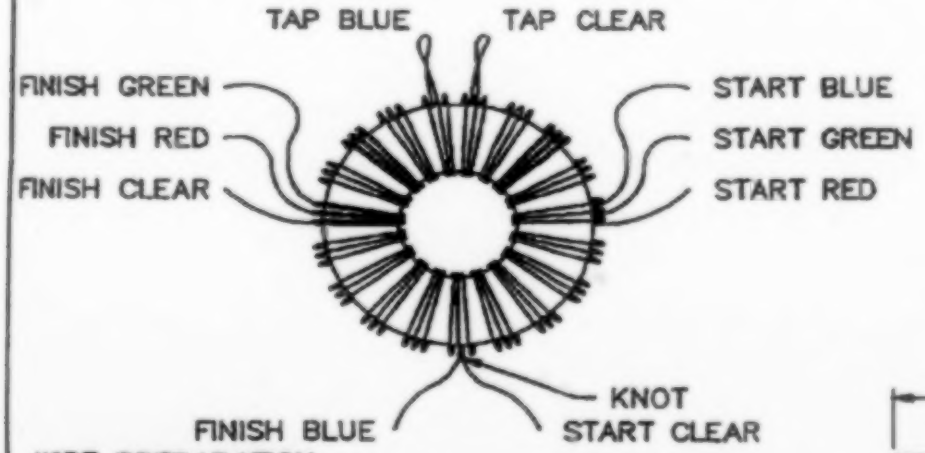

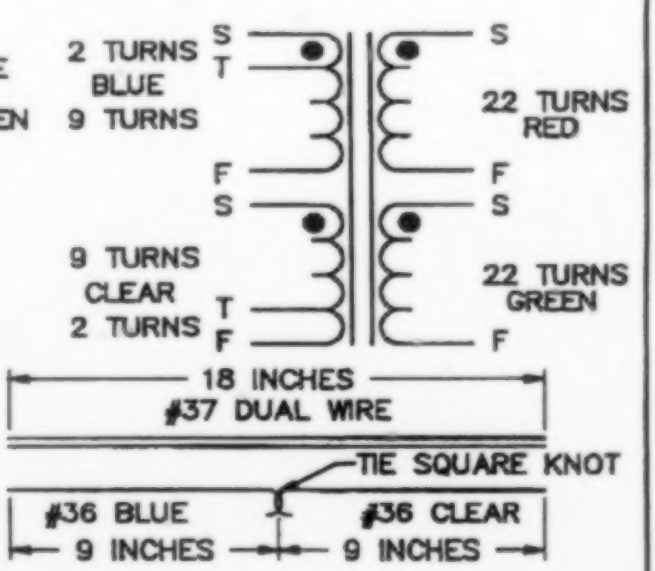

WIRE PREPARATION

1. CUT 18 INCHES OF DUAL WIRE (ITEM 5) AND 10 INCHES EACH OF #36 WIRES (ITEMS 3 AND 4) AND PREP AS SHOWN. MACHINE TWIST THE WIRES TOGETHER FOR 190 TURNS @ 10 TURNS/INCH TO FORM ONE CABLE.

WINDING INSTRUCTIONS (WIND TWO UNITS)

1. START WINDING CABLE AT KNOT AND WIND BOTH WAYS 9 TURNS FOR A TOTAL OF 18 TURNS OVER A FULL 360°.
2. AT THIS POINT UN-TWIST THE DUAL #37 WIRES FROM THE #36 WIRES AND PULL TAP LEADS FOR THE BLUE AND CLEAR WIRES.
3. CROSS OVER TAPS AND FINISH WINDING ALL WIRES 2 MORE TURNS OVER 90° OF CORE.
4. DIP WOUND COILS IN GEL (ITEMS 19 AND 20) AND CURE PER VALOR SPEC 000-0032.

WINDING

SIZE	CAGE CODE NO.	DWG NO.	REV
A	16003	ST7047	03
SCALE NONE		SHT 7 OF 8	

DWG NO	ST7047	SHT 8	REV 03

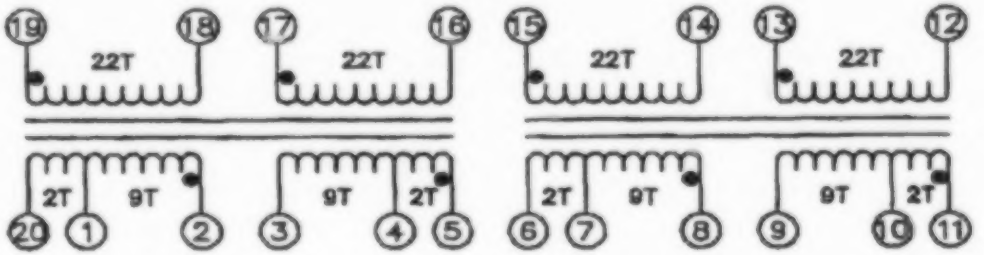

OCL (19–18) AND (15–14)	: 400μH MIN @ 25mV MAX, 10KHz
PHASING	: 20 AND 3–18 AND 16; 6 AND 9–12 AND 14
TURNS RATIO	: 2 : 9 : 22 ± 1%
LL (20–5) WITH (2–3) CONNECTED	: 0.30μH MAX @ 1MHz MIN SHORT (16–17) OR (18–19)
LL (1–4) WITH (2–3) CONNECTED	: 0.20μH MAX @ 1MHz MIN SHORT (16–17) OR (18–19)
LL (6–11) WITH (8–9) CONNECTED	: 0.30μH MAX @ 1MHz MIN SHORT (12–13) OR (14–15)
LL (7–10) WITH (8–9) CONNECTED	: 0.20μH MAX @ 1MHz MIN SHORT (12–13) OR (14–15)
Cww (18–20) OR (16–20) WITH (2–3) SHORTED	: 30pF MAX @ 10KHz
Cww (15–11) OR (13–11) WITH (8–9) CONNECTED	: 30pF MAX @ 10KHz
DCR (PRIMARIES)	: 0.40Ω MAX
DCR (SECONDARIES	: 0.80Ω MAX
HIPOT	: 500VRMS (WINDING – WINDING)

PRODUCTION TEST SPECIFICATIONS

SIZE	CAGE PART NO.	DRAWING NO.	REV
A	15003	ST7047	03
SCALE NONE		SHT 8 OF 8	

UNITED STATES DISTRICT COURT DISTRICT OF NEVADA

(Admitted Into Evidence On 11/14/12)

4 | 3

Pulse Engineering, Inc.,
San Diego, California 92112

CUSTOMER **WESTERN ELECTRIC**
JOB NUMBER _____

PE- 60589
REV F
9-10-80

LIST OF MATERIALS

ITEM NO.	QTY REQD	PART NUMBER	DESCRIPTION	SPECIFICATION OR NOTES
1	2	WCI-60589	WOUND COIL ASSEMBLY	[1]
2	1	043-0460	14 PIN HEADER CASE	*
3	L/R	081-0098	SYLGARD 184 DOW CORNING	P-20606
4				
5				
6	L/R	083-0016	SOLDIER 60/40	P-60607
7	L/R	082-0002.001	INK MARKEM 7254	FRS 100K (WHITE)
8	L/R	083-0017	FLUX KESTER 1015	P-60607
9	L/R	083-0015	FLUX KESTER 197	P-60607

TEST FIXTURES AND/OR PROCEDURES

TOOLING REQUIRED

[ILLEGIBLE] – SOLDER FIXTURE } CJM 17146
SOLDER MASK ----------
00 – [ILLEGIBLE] FIXTURE A-JM-17117

REFERENCE DOCUMENTS

[1] CORES TO BE SINE GRADED USING GRADING FIX. B-JE-15344-H AND LIMITS PER GRADING TABLE ON SHT. 2 INCOMING INSPECTION TO RUN T.C. ON EACH CORE NOT TO DETERMINE WHETHER GRADE LIMITS ADJUSTMENTS WILL BE NECESSARY. DEGAVSS BEFORE GRADING WAIT 2 HR. MINIMUM

FIXTURES		
1.0	JM – 16510	PRI INDUCTANCE
2.0	JM – 16511	LLI JM – 16509 – LL2
3.0	JM – 16512	INTERWINDING CAPACITANCE
4.0	JM – 16513	INSULATED RESISTANCE
5.0	JM – 16522	TURNS RATIO

ASSEMBLY PROCEDURE	P-20607
COIL COAT PROCEDURE	P-20606
TEST PROCEDURE	ATP-20439
CMRR PROCEDURE	P-20514

* CAN BE PROCDURED FROM PIXLEY – RICHARDS PLYMOUTH, MASS. TO WESTERN DWC. 841 789 423

NOTICE: THE INFORMATION AND DESIGN CONTAINED HEREIN IS THE PROPERTY OF PULSE ENGINEERING, INC., WHO RESERVES ALL RIGHTS THERETO

Defendants' Trial Exhibit
DTX-580
2:07-cv-00331-PMP-PAL

2 1

NOTES: UNLESS OTHERWISE SPECIFIED –

1.0 IN THE EVENT OF CONFLICT BETWEEN THIS SPECIFICATION AND THE CUSTOMER SPECIFICATION, THE LATTER SHALL GOVERN.

2.0 INTERPRET THIS SPECIFICATION PER ML-D-1000 AND STANDARDS REFERENCED THEREIN.

3.0 ALL TEST CONDITIONS PER MIL-STD-202, PARA 2.2, EXCEPT TEMPERATURE TO BE 25 ±5° C.

APPLICABLE CUSTOMER DWGS

DWG NO.	ISSUE
A 76 MG00 68	1
841 789 423	2
841 793 813	1
A76 MG00 66	1
841 571 045	1
A- 156919	1

LTR	DESCRIPTION	ECO NO.	DATE	APPROVED
F	ADDED WCI DWG PER ECN	23393	[Illegible]	[Illegible]
D	SPECIFY WIRE AMOUNT ITEM #415	19063	[Illegible]	[Illegible]
C	CHG PER ECN	18998	[Illegible]	[Illegible]
B	CHG. PER ECN	18969	[Illegible]	[Illegible]
A	TO AGREE NEW CUST. SPEC'S	18934	[Illegible]	[Illegible]

REV STATUS	REVISION	F	F	A																				
OF SHEETS	SHEET	1	2	3	4	5	6	7	8	9	10	11	12	13	14	15	16	17	18	19	20	21	22	23

UNLESS OTHERWISE SPECIFIED, DIMENSIONS IN INCHES BEFORE PLATING. TOLERANCES ON:
FRACTIONS = ± 1/64
ANGLES = ± 10
DECIMALS: 0.XX = ± .01
0.XXX = ± .005

DRAWN Pacho	DATE	Pulse Engineering, Inc.
CHECKED		San Diego, California 92112
ENGRG APPD R. Procter	11/21/75	TITLE
PROJ APPD		WESTERN ELECTRIC 2656 N
APPROVED		2 TRANSFORMER PKG.

REF: CUSTOMER WESTERN UNION DRAWING SEE ABOVE REV _____ DATE ____ ☐ EXCEPTIONS: NOTE ____	SIZE B	CODE IDENTIFICATION 01961	DRAWING NUMBER PE-60589	REV F
	SCALE =		SHEET 1 of 3	

WINDING DATA

MANDREL: _____ FORM: _____ CORE: _____

	N_1	N_2		
WIRE SIZE	31 H (ITEM 4) Ø.	31 H (ITEM 5) Ø.		
TRAVERSE	3.50	3.50		
TURNS PER LAYER				
LAYER INSULATION				
NUMBER OF LAYERS				
TOTAL TURNS				
WRAPPER				
LEAD IDENTIFICATION	A	B	C	D

BIFILAR

WINDING DIAGRAM

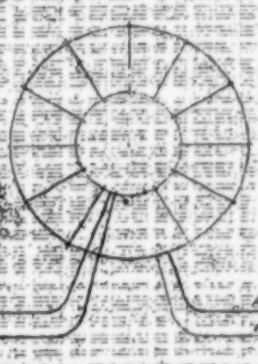

TYP. LEAD BREAKOUT

FIG. 1

WINDING NOTES:

1.0 WIND N_1 & N_2 EVENLY & SNUGLY PER ABOVE DATA.

2.0 WDGS. MUST BE KEEPT TOGETHER & EVENLY DISTRIBUTED TO MEET EMRR REQUIREMENTS

3.0 REF. FIG 1 FOR TYP. LEAD BREAKOUT.

4.0 REPEAT ABOVE PROCEDURE FOR COIL #2

5.0 SAMPLE TEST PER NOTES 1.0, 2.0, 3.0, 4.0, 5.0, 6.0, 7.0, 8.0 & 9.0

SEE NOTE ON SHT 1 FOR TC ADJUSTMENT

GRADING TABLE		
N	MIN	MAX
10	34	36
11	30	33

F20065-3

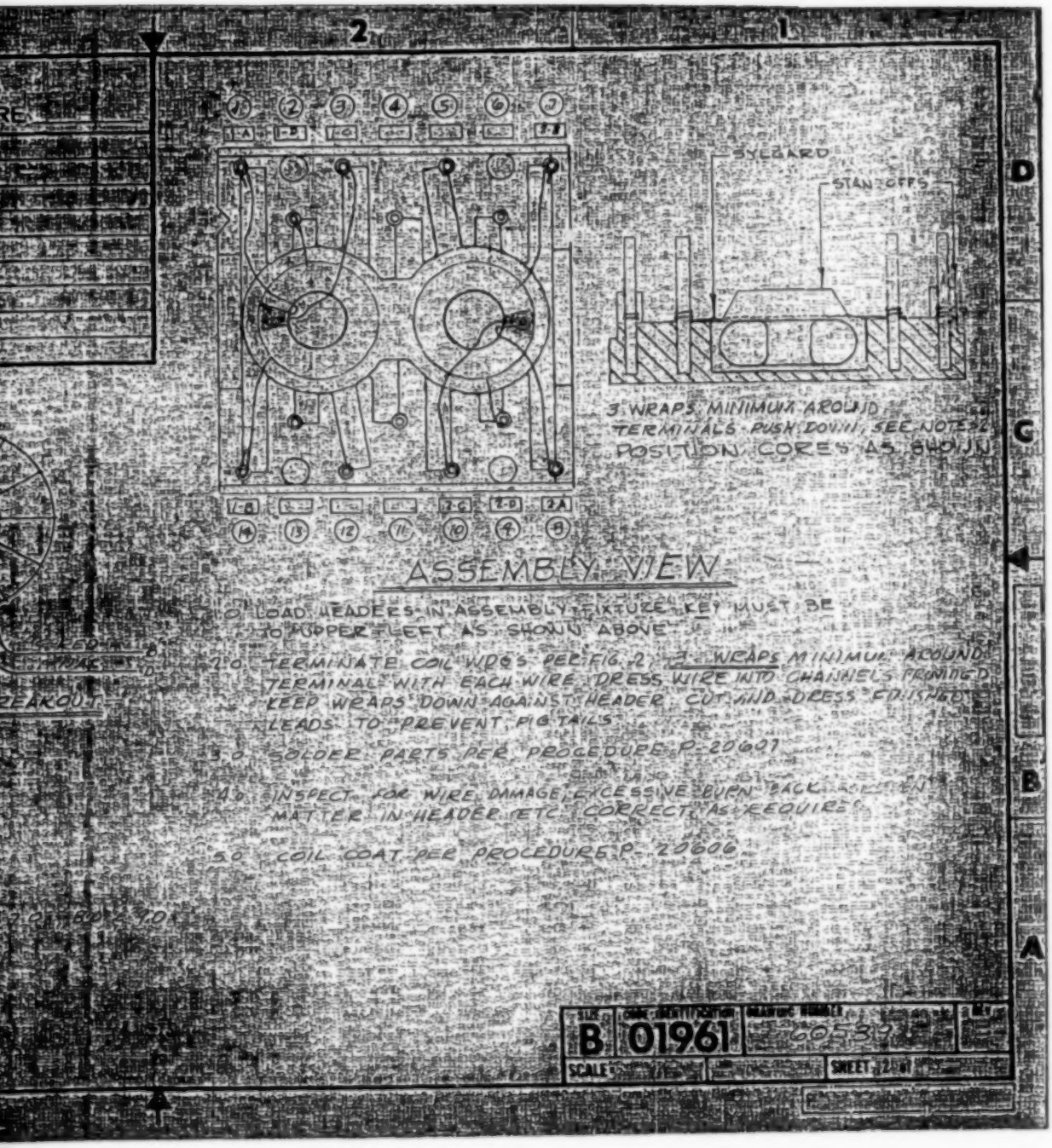
SLEEVE
STANDOFFS
3 WRAPS MINIMUM AROUND TERMINALS PUSH DOWN, SEE NOTE 2
POSITION CORES AS SHOWN
ASSEMBLY VIEW
1.0 LOAD HEADERS IN ASSEMBLY FIXTURE KEY MUST BE TO UPPER LEFT AS SHOWN ABOVE
2.0 TERMINATE COIL WIRES PER FIG. 2, 3 WRAPS MINIMUM AROUND TERMINAL WITH EACH WIRE DRESS WIRE INTO CHANNELS PROVIDED KEEP WRAPS DOWN AGAINST HEADER CUT AND DRESS EXCESS LEADS TO PREVENT PIG TAILS
3.0 SOLDER PARTS PER PROCEDURE P-20607
4.0 INSPECT FOR WIRE DAMAGE, EXCESSIVE BURN BACK, FOREIGN MATTER IN HEADER ETC. CORRECT AS REQUIRED
5.0 COIL COAT PER PROCEDURE P-20606
B
01961
SCALE
SHEET

NOTICE: THE INFORMATION AND DESIGN CONTAINED HEREIN IS THE PROPERTY OF PULSE ENGINEERING, INC., WHO RESERVES ALL RIGHTS THERETO

D

TEST NOTES

1.0 TURNS RATIO: TEST 100% TEST FIXTURE JM-16522 METHOD 7.0
1:1 ± 2% @20 KC

2.0 POLARITY: TEST 100% PER SCHEMATIC

3.0 PRIMARY INDUCTANCE: MEAS. ON 63H BRIDGE, RANGE X.1 TEST FIXTURE = JM-16510 METHOD 3.0

(1-14) @ 100 KHZ
(7-8) 107.015 VRMS

SAMPLE TEST IN PROCESS		100% TEST FINAL	
MIN.	MAX	MIN.	MAX.
110 MH	155 MH	85 MH	175 MH
@25° C		SAMPLE OVER TEMP. RANGE OF 0° TO 70° C	

C

4.0 LEAKAGE INDUCTANCE MEAS. ON BOONTON 71A RANGE 1MH TEST FIXTURE – JM 16511 METHOD 4.0
(1-14) WITH (2-3) SHORTED)
(7-8) WITH (9-10) SHORTED)
COMPENSATE FOR ALL FIXTURES INDUCTANCE

SAMPLE TEST	
IN PROCESS	FINAL
LL, .100 MAX.	.200 MH MAX

50 INTERWINDING CAPACITANCE: MEAS. ON BOONTON 71A TEST FIXTURE JM-16512 METHOD 5.0
BETWEEN (1-14) SHORTED AND (2-3 SHORTED)
B BETWEEN (7-8) SHORTED AND (9-10) SHORTED)

SAMPLE TEST	
IN PROCESS	FINAL
6.0 pf	15 pf MAX.

6.0 INSULATION RESISTANCE: SAMPLE TEST AT 25° C TEST FIXTURE – JM-16513 METHOD 6.0
600 MEG Ω MIN AT 500 V D.C. BETWEEN WINDINGS (1-14) TO (2-3) (7-8) TO (9-10)

A

7.0 ET WINDING (1-14) & (7-8) = 2.5 VOLTS MICRO SEC. MIN. MEASURE PER PROCEDURE ATP-20439, PARA 80

8.0 CMRR, TEST PER PROCEDURE, P-20514

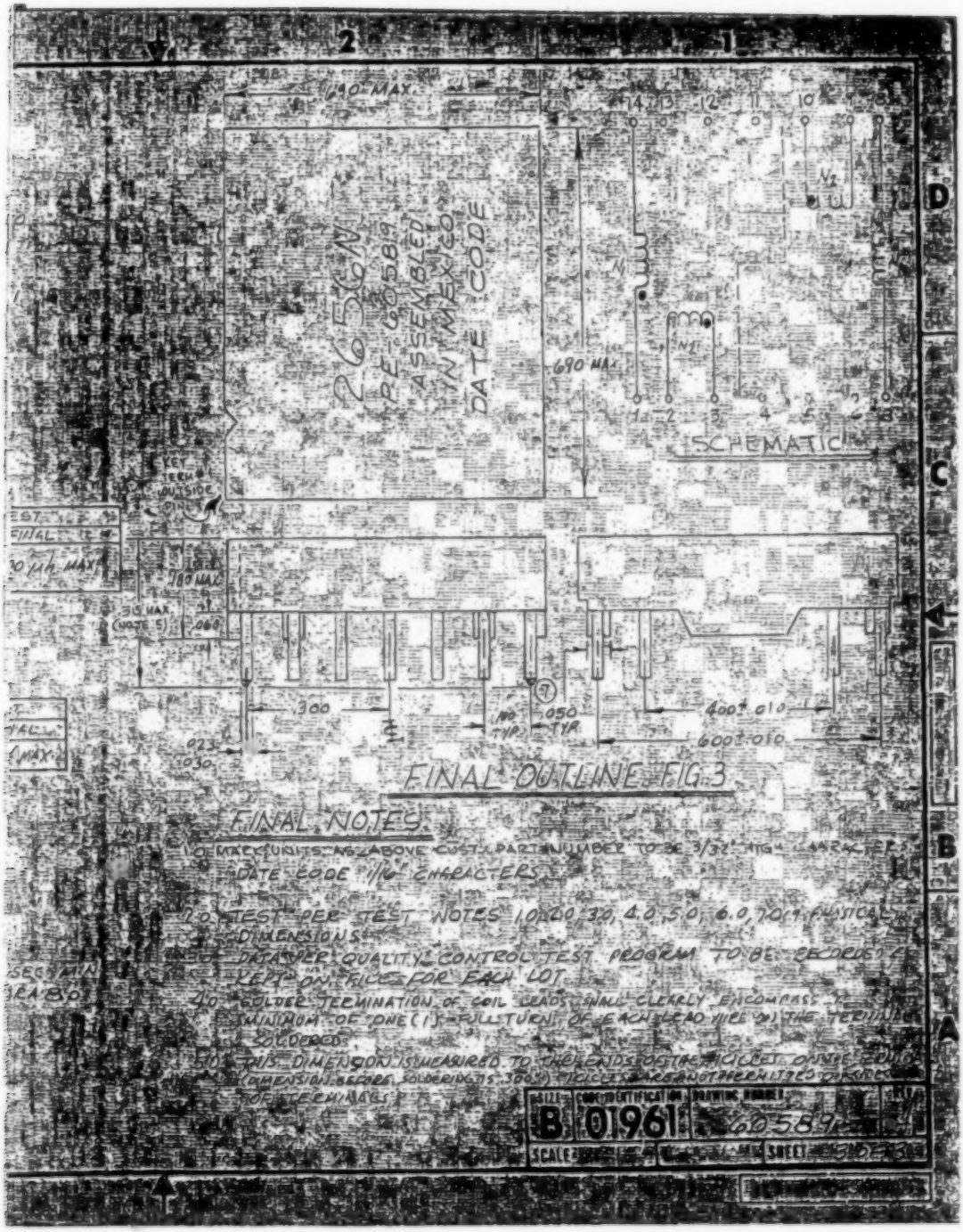
2
1
D
C
B
A
690 MAX
14 13 12 11 10 9 8
N2
N1
1 2 3 4 5 6 7 8
SCHEMATIC
KEY TERM OUTSIDE PIN
780 MAX
.315 MAX (NOTE 5)
.060
.300
.100 TYP
.050 TYP
400±.010
600±.010
.023
.030
FINAL OUTLINE FIG 3
FINAL NOTES
1.0 MARK UNITS AS ABOVE CUST. PART NUMBER TO BE 3/32" HIGH CHARACTERS
DATE CODE 1/16" CHARACTERS
2.0 TEST PER TEST NOTES 1.0, 2.0, 3.0, 4.0, 5.0, 6.0, 7.0 & PHYSICAL DIMENSIONS
3.0 DATA PER QUALITY CONTROL TEST PROGRAM TO BE RECORDED & KEPT ON FILE FOR EACH LOT
4.0 SOLDER TERMINATION OF COIL LEADS SHALL CLEARLY ENCOMPASS A MINIMUM OF ONE (1) FULL TURN OF EACH LEAD WIRE ON THE TERMINAL SOLDERED
5.0 THIS DIMENSION IS MEASURED TO THE ENDS OF THE PICICLES ON THE TERMINAL (DIMENSION BEFORE SOLDERING IS .300") PICICLES ARE NOT PERMITTED ON SIDES OF TERMINALS
SIZE B
CODE IDENTIFICATION 01961
DRAWING NUMBER 60589
SCALE
SHEET

4 3

NOTICE: THE INFORMATION AND DESIGN CONTAINED HEREIN IS THE PROPERTY OF PULSE ENGINEERING, INC., WHO RESERVES ALL RIGHTS THERETO

WINDING DATA

MANDREL: _____ FORM: _____ CORE: ITEM 1

	WINDING	#31 H (ITEM 2) R	#31 H (ITEM 3) G		
D	WIRE SIZE	350°	350°		
	TRAVERSE				
	TURNS PER LAYER				
	LAYER INSULATION				
	NUMBER OF LAYERS				
	TOTAL TURNS	N	N		
	WRAPPER				
	LEAD IDENTIFICATION	A. B.	C. D.		

_____BIFILAR_____/

C NOTES:

1. RENT WIND PER WINDING DATA
2. ELECTRIC REQUIREMENTS
   - 2.1 SAMPLE TEST PER TEST NOTES 1.0 THRU 8.0 ON SHEET 3 OF PE-60589

B SEE SHEET 1 OF PE-60589 FOR GRADING INFORMATION AND TO ADJUST. GRADE CORES USING FIXTURE B-JE-15344-11 TO GRADING TABLE I

TABLE I

GRADE	
N	MIN MAX
10	34 – 36
11	30 – 33
	–
	–
	–

A

	PE-60589
NEXT ASSY	USED ON
APPLICATION	

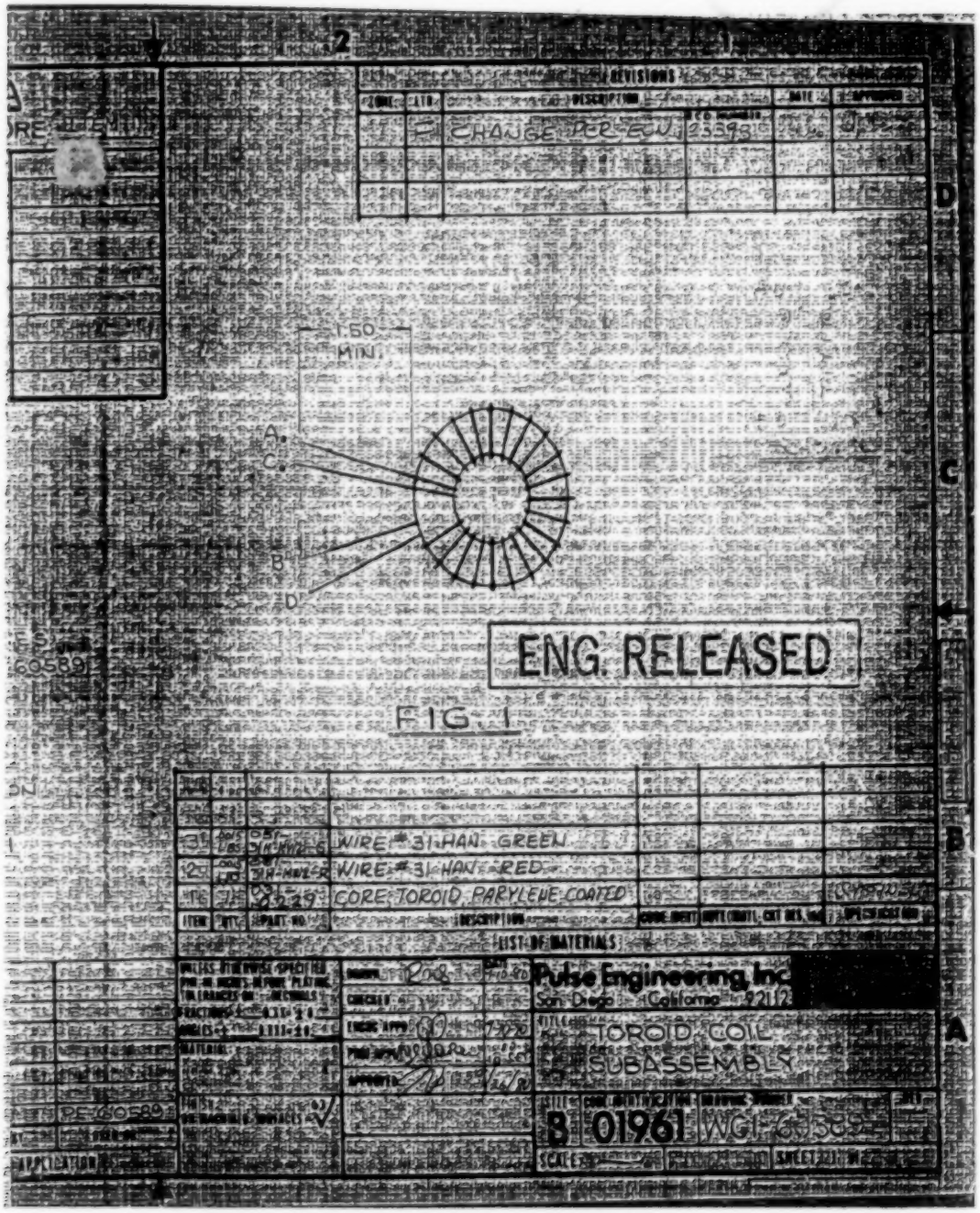
1.50
MIN.
A.
C.
B
D
ENG. RELEASED
FIG. 1
WIRE #31 HAN. GREEN
WIRE #31 HAN. RED
CORE, TOROID, PARYLENE COATED
LIST OF MATERIALS
Pulse Engineering, Inc.
San Diego, California 92128
TOROID COIL
SUBASSEMBLY
B 01961
PE-60589

UNITED STATES DISTRICT COURT
DISTRICT OF NEVADA

(Admitted Into Evidence On 11/15/12)

Defendants' Trial Exhibit
DTX-605
2:07-cv-00331-PMP-PAL

HANDBOOK OF SURFACE MOUNT TECHNOLOGY

Stephen W Hinch

Longman Scientific & Technical,
Longman Group UK Limited,
Longman House, Burnt Mill, Harlow,
Essex CM20 2JE, England
and Associated Companies throughout the world.

Copublished in the United States with
John Wiley & Sons, Inc., 605 Third Avenue, New York, NY 10158

© Longman Group UK Limited 1988

All rights reserved; no part of this publication may be reproduced, stored in a retrieval system, or transmitted in any form or by any means, electronic, mechanical, photocopying, recording, or otherwise, without either the prior permission of the Publishers or a licence permitting restricted copying issued by the Copyright Licensing Agency Ltd, 33-34 Alfred Place, London, WC1E 7DP.

First published 1988

British Library Cataloguing in Publication Data

Hinch, Stephen W.
Handbook of surface mount technology.
1. Electronic equipment. Components.
Assembly. Applications of surface mount
technology
I. Title
621.3815'1

ISBN 0-582-00517-5

Library of Congress catalog card number 88-081411

ISBN 0-470-21094X (USA only)

Printed and bound in Great Britain
at The Bath Press, Avon

Handbook of Surface Mount Technology

by
Stephen W. Hinch

Hewlett-Packard Company
Santa Rosa, California

[LOGO] **Longman**
Scientific&
Technical
Copublished in the United States with
John Wiley & Sons, Inc., New York

* * *

. . . that allow them to be surface mounted as an integral part of the SMT process flow.

8.2.1 Conventional through-hole approach

In this approach, through-hole components are conventionally inserted after all surface mount components have been soldered. Normal through-hole insertion processes are employed, so virtually any component compatible with standard through-hole insertion can be mounted on the mixed assembly. A typical product is pictured in Fig. 8.2.

Although technologically straightforward, the actual process flow is cumbersome. Two full production lines must be supported, one for surface mount and one for through-hole. Besides the increased floor space and cost of capital equipment, engineering support must be distributed across a larger base of process technologies.

8.2.2 All SMT approach

Considerable attention has been focused on full surface mount solutions to the mixed assembly problem. Generally this involves cutting or forming the leads of through-hole devices to permit surface mounting. A typical assembly is shown in Fig. 8.3.

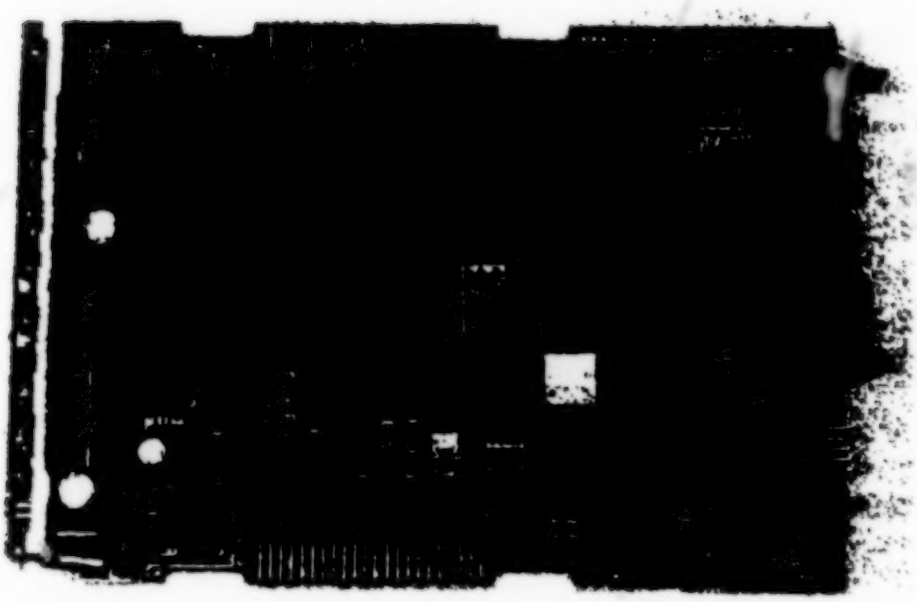

FIG. 8.2 Mixed assembly with through-hole components inserted in conventional fashion.

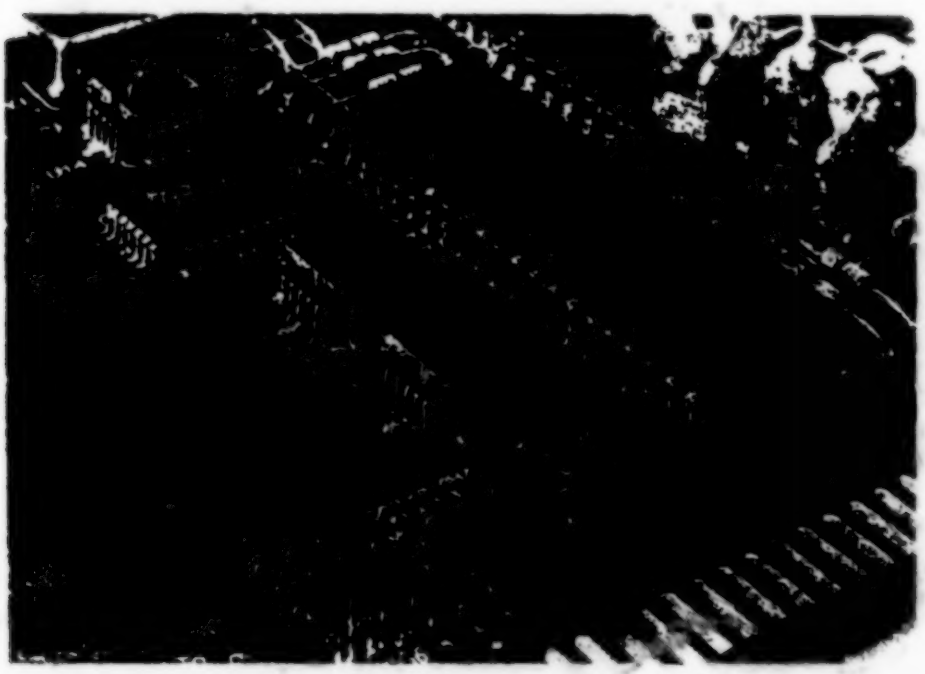

FIG. 8.3 Mixed assembly using modified through-hole components. The leads on the 40-pin DIP have

been trimmed, allowing it to be surface mounted simultaneously with the SMT components. (Photograph by the author. Board supplied by Micro Industries, Westerville, OH.)

Axial lead resistors and capacitors are surface mounted by forming their leads in gull-wing fashion, as shown in Fig. 8.4a. A flat surface is sometimes coined on the lead to increase the contact area and improve the visual inspectability of the solder joint. Dual-in-line packages can be surface mounted either by shearing to form I-lead joints or by forming them into a gull-wing configuration (Fig. 8.4b).

This approach simplifies the process flow because all devices can be attached in a single reflow process. Product designs can take better advantage of such SMT benefits as reduction in the number of via holes and

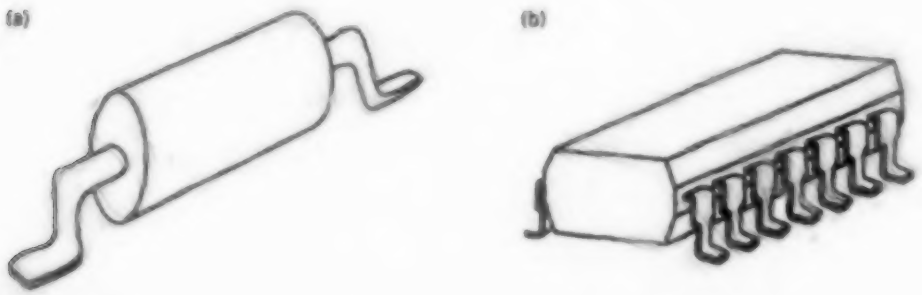

FIG. 8.4 Modification of through-hole components for surface mounting: a. axial-leaded component, b. DIP package.

UNITED STATES DISTRICT COURT
DISTRICT OF NEVADA

(Admitted Into Evidence On 11/15/12)

Defendants' Trial Exhibit

DTX-626

2:07-cv-00331-PMP-PAL

(12) **Japanese Unexamined Utility Model Application Publication** (U)

(19) Japan Patent Office (JP)

(11) Japanese Unexamined Utility Model Application Publication Number

H5-55513

(43) Publication date: 23 July 1993

(51) Int. Cl.[5]	Identification codes	JPO file numbers	FI	Technical indications
H 01 F 15/10	D	7129-5 E		
15/02	L	7129-5 E		

Request for examination: Not yet requested:
Number of claims: 1 (Total of 4 pages)

(21) Application number
H3-111802

(22) Date of application
21 December 1991

(71) Applicant
000003067
TDK CORPORATION
1-13-1 Nihonbashi, Chuo-ku, Tokyo

(72) Inventor
AKACHI, YOSHIAKI
[NOT CONFIRMED]
% TDK CORPORATION

1-13-1 Nihonbashi,
Chuo-ku, Tokyo
(72) Inventor
KINOSHITA, KAZUNORI
[NOT CONFIRMED]
% TDK CORPORATION
1-13-1 Nihonbashi,
Chuo-ku, Tokyo
(72) Inventor
GOKIDA, KATSUHIRO
[NOT CONFIRMED]
% TDK Corporation
1-13-1 Nihonbashi,
Chuo-ku, Tokyo
(74) Agent
Patent attorney
WAKADA, KATSUICHI

---

(54) [TITLE OF THE INVENTION] SMALL COIL WIRE COMPONENT

(57) [ABSTRACT]

[OBJECT] To provide a structure for a terminal portion in a small coil wire component, wherein the operation for connecting the coil wire can be performed in a continuous manufacturing process.

[CONSTITUTION] A core 4 is contained within a plastic case 6 that has an opening portion of 6a on a face that faces a substrate 7, and is secured by an adhesive 8, or the like. The coil wire 5 of the core 4 is wound onto a coil wire wrapping portion 2b, and soldered. The coil wire wrapping portion 2b of one end of the terminal portion 2a protrudes from the opening portion

side of the plastic case 6. The other end of the terminal 2 protrudes from the other face of the case 6.

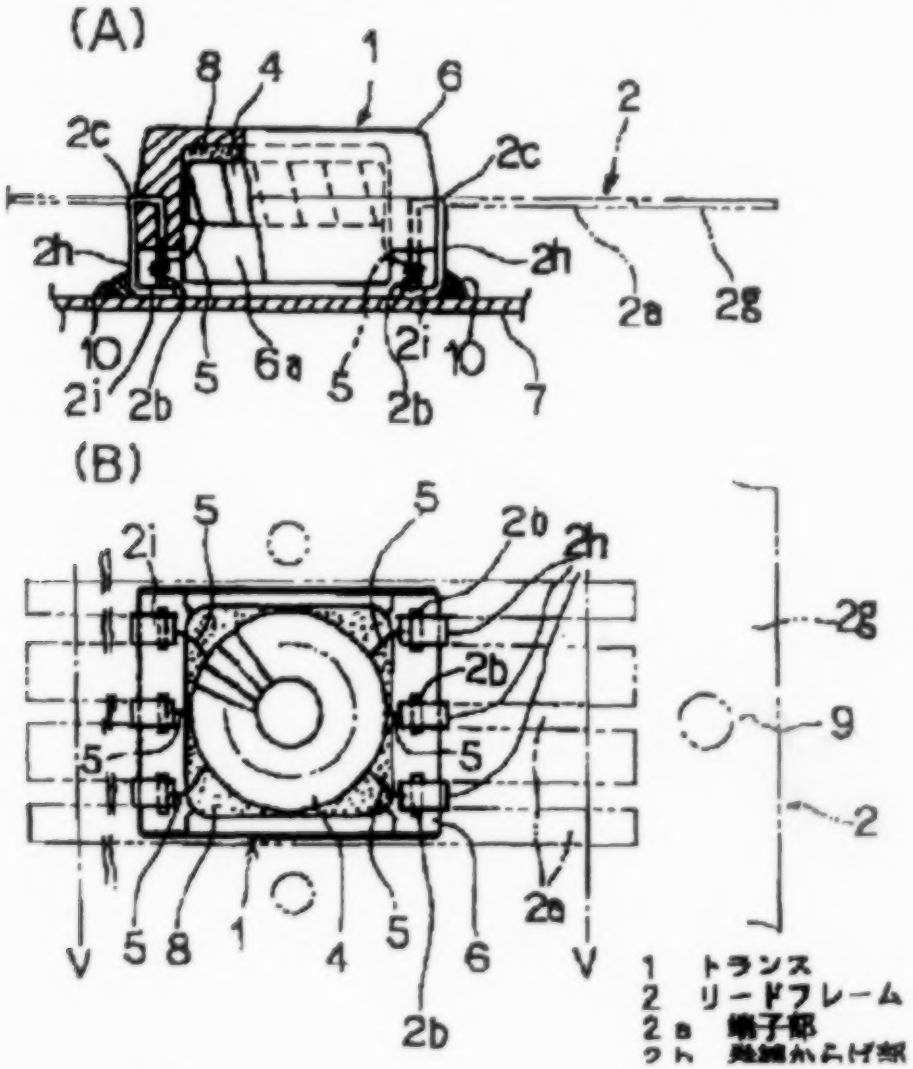

1. Transformer
2. Lead Frame
2a. Terminal Portion
2b. Coil Wire Wrapping Portion
2c. Base Portion
2h. Downward-Extending Portion
2i. Soldered Portion
4. Toroidal Core

5. Coil Wire
6. Case
7. Substrate
8. Adhesive
9. Position Hole

[SCOPE OF UTILITY MODEL REGISTRATION CLAIMS]

[CLAIM 1] A small coil wire component wherein a core, whereon is wound a coil wire, is contained in a plastic case that is open on one face, where a coil wire wrapping portion of a terminal protrudes from the opening portion side of the case, and a base portion of a terminal, which is soldered to a substrate, protrudes from a face other than the open face of the case.

[BRIEF DESCRIPTION OF THE DRAWINGS]

FIG. 1 (A) is a side view diagram that is a partial cutaway showing an example of embodiment (a surface mount type) of a small transformer according to the present invention, and FIG. 1 (B) is a plan view diagram thereof.

FIG. 2 (A) is a side view diagram illustrating an example of embodiment of a pin-type small transformer according to the present invention, and (B) is a plan view diagram thereof.

FIG. 3 (A) is a plan view diagram of a lead frame during a manufacturing process of a small transformer according to the present invention, and FIG. 3 (B) is a partially enlarged diagram of FIG. 3 (A).

FIG. 4 (A) is a plan view diagram of a lead frame during a manufacturing process for a small transformer according to the present invention, and FIG. 4 (B) is a cross-sectional diagram along the section E-E of FIG. 4 (A).

[FIG. 1]

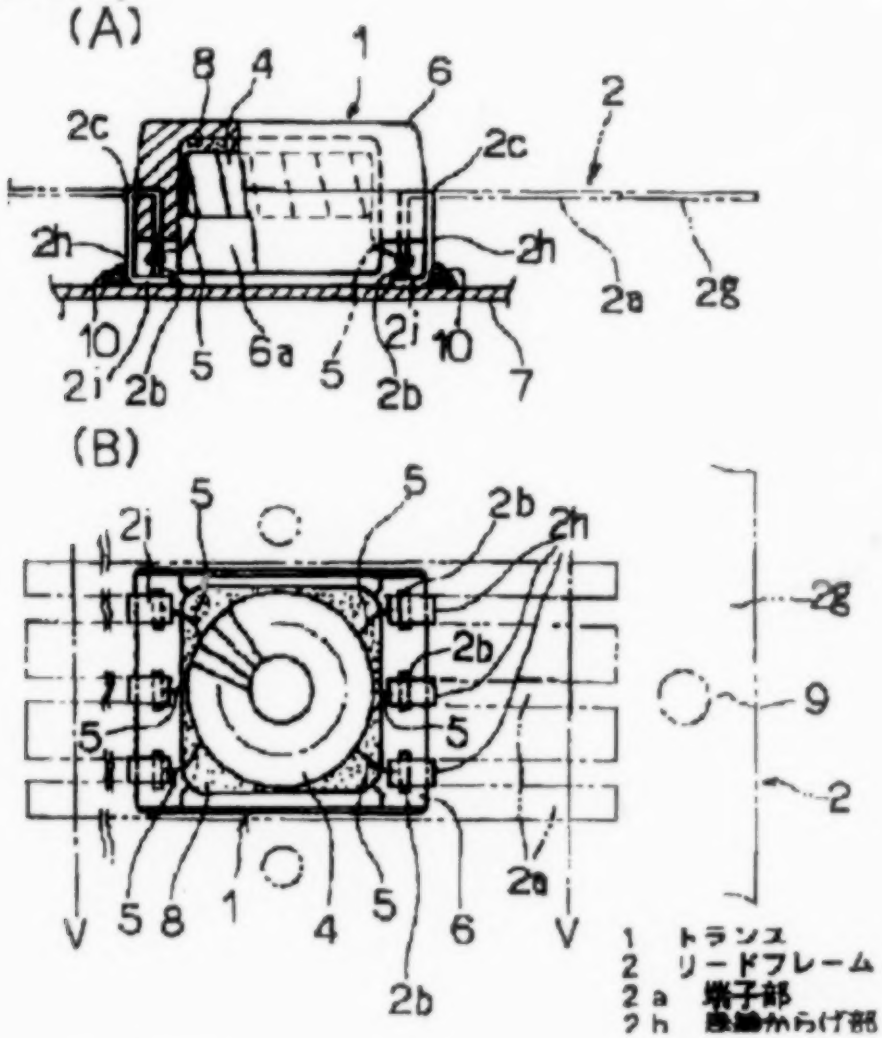

1. Transformer
2. Lead Frame
2a. Terminal Portion
2b. Coil Wire Wrapping Portion

2c. Base Portion
2h. Downward-Extending Portion
2i. Soldered Portion
4. Toroidal Core
5. Coil Wire
6. Case
7. Substrate
8. Adhesive
9. Position Hole

FIG. 5 (A) is a plan view diagram at the time that the case is molded in a small transformer according to the present invention, FIG. 5 (B) is a side view diagram thereof, and FIG. 5 (C) is a view in the direction of the arrow Y in FIG. 5 (A).

FIG. 6 is a perspective view illustrating the state during the manufacturing process in one example of a conventional small pulse transformer.

[EXPLANATION OF CODES]

1. Transformer
2. Lead Frame
2a. Terminal Portion
2b. Coil Wire Wrapping Portion
2c. Base Portion
2h. Downward-Extending Portion
2i. Soldered Portion
4. Toroidal Core
5. Coil Wire
6. Case
7. Substrate
7a. Hole
8. Adhesive
9. Position Hole

[FIG. 2]

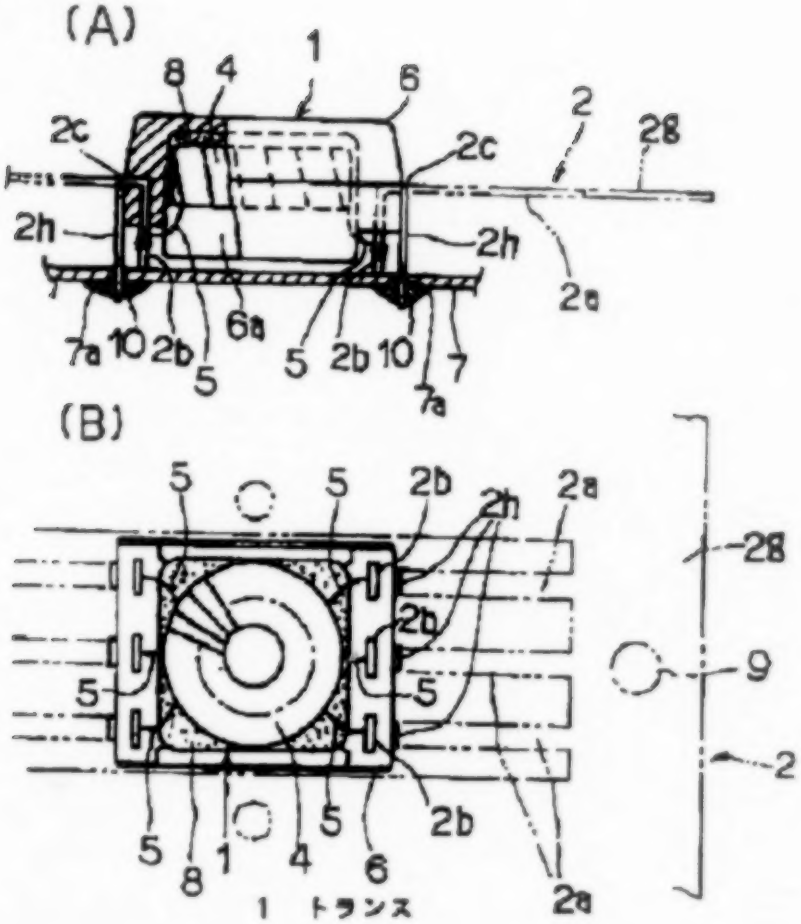

1. Transformer
2. Lead Frame
2a. Terminal Portion
2b. Coil Wire Wrapping Portion
2c. Base Portion
2h. Downward-Extending Portion
4. Toroidal Core
5. Coil Wire
6. Case
7. Substrate
7a. Hole
8. Adhesive
9. Position Hole

[FIG. 3]

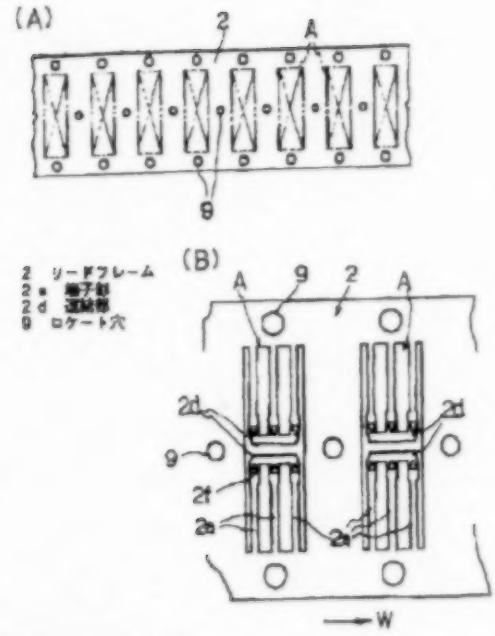

2. Lead Frame
2a. Terminal Portion
2b. Connecting Portion
9. Positioning Hole

[FIG. 4]

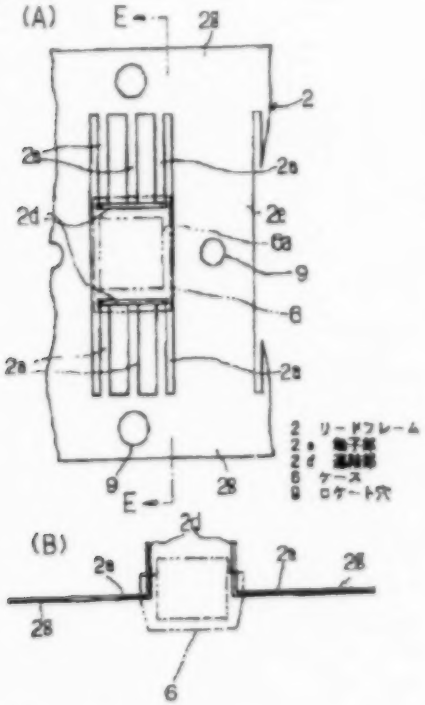

2. Lead Frame
2a. Terminal Portion
2b. Connecting Portion
6: Case
9. Positioning Hole

[FIG. 6]

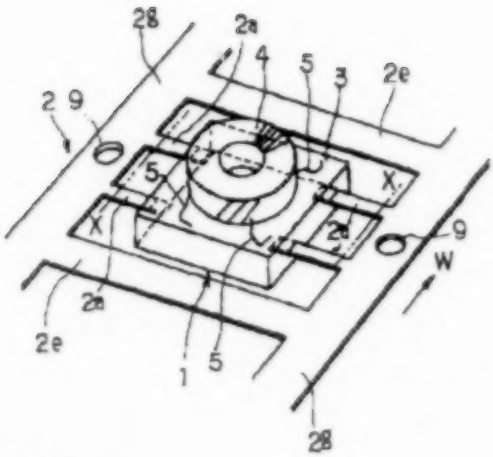

[FIG. 5]

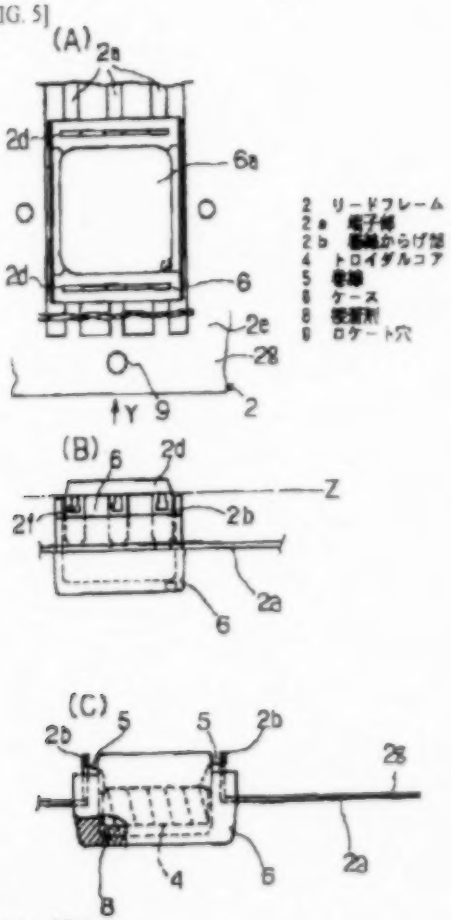

2. Lead Frame
2a. Terminal Portion
2b. Connecting Portion
4. Toroidal Coil
5. Color
6. Case
8. Adhesive Agent
9. Positioning Hole

[DETAILED EXPLANATION OF THE INVENTION]
[0001]
[AREA OF USE IN INDUSTRY]

The present invention relates to a small coil wire component such as a transformer or an inductor that is used in an electronic device, and, in particular, relates to a structure for a terminal portion for connecting a coil wire.

[0002]
[PRIOR ART AND PROBLEM SOLVED BY THE PRESENT INVENTION]

FIG. 6 is a perspective view illustrating a conventional small pulse transformer 1 in the process during manufacturing. In FIG. 6, 2 is a metal lead frame that is formed in a continuous punching process and fed in the direction of the arrow W, where the two side portions 2g and 2g are connected at equal intervals by bridging portions 2a, where a plurality of plate-shaped terminal portions 2a are formed between the bridging portions 2e, where plastic bases 3 are formed monolithically through insertion molding on the terminal portions 2a of the lead frame 2.

[0003]

However, in this type of structure, the coil wire wrapping portion of the terminal portion 2a is enclosed by the two side portions 2g of the lead frame 2, and thus operations by which to wrap the coil wire 5 onto the coil wire wrapping portion are not possible when the base 3 has been assembled onto the lead

frame 2. Because of this, the terminal portion 2a is cut at the portion indicated by the double dotted line X, and after the base 3 is cut from the two side portions 2g of the lead frame, then the toroidal core 4, which has been wound with the coil wire 5, is placed on the base 3, and the coil wire 5 is wrapped onto the coil wire wrapping portion of the terminal portion 2a and soldered. Because of this, the processing thereafter cannot be handled as a product chain wherein a plurality of individual transformers are integrated into a single unit by the lead frame, and thus there is a problem in that manufacturability is poor so the manufacturing cannot be performed efficiently.

[0004]

In consideration of the problem areas set forth above, the object of the present invention is to provide a small coil wire component of a structure wherein the operations for wrapping the coil wire onto the terminal can be performed in a continuous manufacturing process while the base, and the like, are integrated monolithically with the lead frame.

[0005]
[MEANS FOR SOLVING THE PROBLEM]

In order to achieve the object set forth above, the present invention is a small coil wire component wherein a core, whereon is wound a coil wire, is contained in a plastic case that is open on one face, where a coil wire wrapping portion of a terminal protrudes from the opening portion side of the case, and a base portion of a terminal, which is soldered to

a substrate, protrudes from a face other than the open face of the case.

[0006]

[OPERATION] Because the present invention has the structure set forth above, the operation for wrapping the coil wire onto the terminal is performed continuously while the operator observes the wrapping portion of the coil wire onto the terminal in a state wherein the plastic case is attached to the lead frame and wherein the open face of the case is upward.

[0007]
[EXAMPLES OF EMBODIMENT]

FIG. 1 (A) is a partial cutaway side view diagram of one example of embodiment of a small transformer (of a surface mount type) as set forth in the present invention, and FIG. 1 (B) is a plan view diagram thereof. As illustrated in FIG. 1 (A) and (B), the small transformer according to the present invention is structured with a toroidal core 4, on which is wound the coil wire, contained in a plastic case 6 that has an opening portion 6a in the face that faces the substrate 7, adhered by an adhesive 8, where the coil wire 5 of the toroidal core 4 is wrapped onto a coil wire wrapping portion 2b and soldered (10). Additionally, a middle portion of the terminal 2a is embedded in the plastic case 6, where a coil wire wrapping portion 2b of one end of the terminal 2a protrudes vertically towards the substrate 7 from the opening portion 6a side of the plastic case 6, and the base portion 2c that is the other end protrudes from a side face of the case

6, where the part from the base portion 2c to the tip end thereof is structured from a downward-extending portion 2h that is positioned towards the outside of the coil wire wrapping portion 2b, and a soldering portion 2a that is formed by bending towards the inside from the downward-extending portion 2h.

[0008]

FIG. 2 (A) is a partial cutaway side view diagram of an example of embodiment of a small transformer of a pin type according to the present invention, and FIG. 2 (B) is a plan view diagram thereof. In FIG. 2 (A) and (B), the pin type differs from the example of embodiment described above (the surface mount type) only in the structure of the portion wherein the base portion 2c is soldered to the substrate 7, where, as illustrated, after the downward-extending portion 2h has passed through a hole 7a that is provided in the substrate 7, it is soldered (10) to the substrate 7 on the side that is opposite from the coil wire wrapping portion 2b.

[0009]

In the manufacturing in the examples of embodiment set forth above, first, as illustrated in FIG. 3 (A) and in FIG. 3 (B), which is an expanded view thereof, the metal lead frame 2 is punched out. The terminal portion 2a is formed connected in the press feeding direction W in the press punching process. Here, in FIG. 3 (A) and (B), the A portion is the punched-out of portion, 2a is the terminal portion, and 2d is a connecting portion for lining up a plurality of terminal

portions 2a in the direction of the tip ends thereof, with this connecting portion 2d is not absolutely necessary. 2f is a coil wire wrapping hole, and 9 is a positioning hole for the press feeding.

[0010]

As illustrated in FIG. 4 (A), next the end portion of the terminal portion 2a is bent in a direction that is perpendicular to the plane of the paper in a press bending process, to form an L shape, as illustrated in FIG. 4 (B), which is a cross-sectional diagram along the section E-E in FIG. 4 (A). Then, as illustrated by the double dotted lines in FIG. 4 (A) and (B), a plastic case 6 is formed integrally with the terminal portion 2a. FIG. 5 (A) is a plan view diagram illustrating the state wherein the plastic case 6 has been formed integrally through insertion molding with the terminal portion 2a of the lead frame 2, and FIG. 5 (B) is a view in the direction of the arrow A in FIG. 5 (A), and FIG. 5 (C) is a partial cutaway side view diagram of FIG. 5 (A). As illustrated in FIG. 5 (B), one end portion of the terminal portion 2a protrudes from the opening portion 6a side of the case 6, and a coil wire wrapping portion 2b is formed with the coil wire wrapping hole 2f facing upward by cutting the connecting portion 2b at the tip end at the position of the single dotted line Z.

[0011]

Forming the coil wire wrapping portion 2b in this way, extending from the opening portion 6a side of the case 6 makes it possible to house the toroidal core

4 in the case 6 in the subsequent process, as illustrated in FIG. 5 (C), and then, after securing using an adhesive 8, or the like, to wrap the coil wire 5 of the toroidal core 4 onto the coil wire wrapping portion 2b, and then to solder by dipping in a solder tank, in a continuous manufacturing process with the case 6 integrated with the lead frame 2. This makes it possible to automate the soldering with the case 6 connected to the lead frame 2.

[0012]

Note that adhesive tape or a plastic molding structure may be used as the means for securing the core 4 to the case 6. Additionally, instead of the toroidal core, a drum core, or some other core may be used as the core for that is contained in the case 6.

[0013]

[EFFECTS OF THE INVENTION] Given the present invention, the coil wire wrapping portion of one end of the terminal protrudes from the opening portion side of the core-containing case and the coil wire that is wound on the core and the coil wire wrapping portion extend in the same direction relative to the lead frame, thus making it possible to wrap the coil wire onto the coil wire wrapping portion, while an operator observes the connecting portion, and to perform soldering by dipping in a solder tank, continuously from the process for processing the lead frame, doing so with the case connected to the lead frame, thus making it possible to perform the operation for connecting the coil wire continuously and with excellent

efficiency. The soldering can also be automated, thus enabling the coil wire connecting operations to be performed with even higher efficiency.

UNITED STATES DISTRICT COURT DISTRICT OF NEVADA

(Admitted Into Evidence On 11/14/12)

NOTICE: THE INFORMATION AND DESIGN CONTAINED HEREIN IS THE PROPERTY OF PULSE, ENGINEERING, INC., WHO RESERVES ALL RIGHTS THERETO.	CUSTOMER INFORMATION CUST. NAME: CATALOG CUST. DWG: _____ NOTES: _____ CUST. REV.: _____	PE-65793

NOTES:

1. INTERPRET THIS SPECIFICATION PER MIL-T-31000 AND STANDARDS REFERENCED THEREIN.
2. ALL TEST CONDITIONS PER MIL-STD-202. PARA. 2.2, EXCEPT TEMPERATURE TO BE 25 ±5°C.

PARTS LIST

ITEM	QTY	UM	PART NUMBER	DESCRIPTION	CAGE CODE	MATERIAL SPECIFICATIONS
1	2	EA	WC1-64993	WOUND COIL ASSEMBLY		
2	2	EA	024-0170.001	LEAD FRAME		
3	1	EA	043-1241.001	CASE – 16 PIN		
4	.0005	GA	081-0185.001	EPOXY XT5038-6		AMICON
5	.00005	GA	081-0185.002	HARDENER B-100		AMICON
6	A/R	LB	081-0176.001	COATING 1-2577		
7	A/R	OZ	081-0174.002	CATALYST #176		
8	A/R	LB	083-0054.001	SOLDER Sn10 BAR		
9	A/R	EA	082-0002.001	INK: MARKEM 7254		
10	A/R	GA	083-0017	SOLDER FLUX 1015 KESTER		
11	.05	EA	075-0239.001	SHIPPING TUBE		

ENG.RELEASED

REV	DESCRIPTION	ECN	DATE	APPROVED
A	NEW RELEASE		12/18/91	/s/ ll

REVISIONS

APPLICABLE TEST FIXTURES AND/ OR PROCEDURES:

1. JM-18436 ASSEMBLY FIXTURE
2. P-20913 SILICONE COATING PROCEDURE
3. P-21274 ASSEMBLY PROCEDURE
4. P-21275 ENCAPSULATION PROCEDURE

UNLESS OTHERWISE SPECIFIED, FIELD DIMENSIONS IN INCHES BEFORE PLATING. TOLERANCES ARE:
XX ± .01

APPROVALS	DATE
DRAWN /s/ C. MULLIGAN	12/11/91
CHECKED /s/ [Illegible]	12/14/91
DSGN ENGR /s/ [Illegible]	12/19/91

[LOGO] Pulse®

San Diego, California

TITLE

TRANSFORMER ISDN, SMT

5. JM-18456 GULL WING FORMING DIE 6. JM-18457 FINAL TRIM DIE 7. JE-18465 TEST FIXTURE	XXX ±.005 DO NOT SCALE DRAWING	[ILLEGIBLE] /s/ [Illegible]	12/19/91				
	material	[ILLEGIBLE] /s/ [Illegible]	12/19/91	SIZE B	CODE IDENT. 01961	DWG NO. PE-65793	REV A
		[ILLEGIBLE] /s/ [Illegible]					
	finish	OTHER /s/ [Illegible]	12/19/91	SCALE NONE	CARD FILE 65793-1		SHEET 1 OF 3

NOTICE: THE INFORMATION AND DESIGN CONTAINED HEREIN IS THE PROPERTY OF PULSE ENGINEERING, INC. AND RESERVES ALL RIGHTS THERETO.

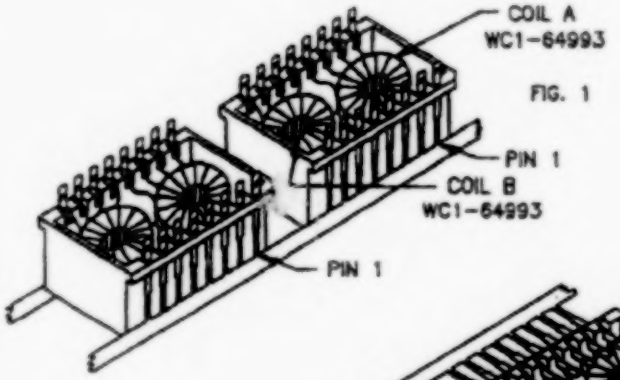

FIG. 1

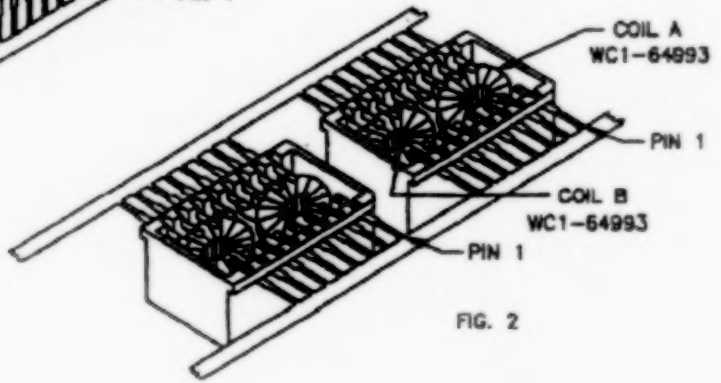

FIG. 2

ASSEMBLY NOTES:

1.0 DIP TWO TIMES IN SILICON 1-2577 PER P-20913 PROCEDURE (2 COILS)
2.0 PLACE THE COILS INTO CASE AND TERMINATE WIRES TO ASSIGNED LEADS (SEE FIG. 1).
3.0 FLUX DIP LEAD TIPS, SOLDER DIP LEAD TIPS AND CLEAN ASSEMBLY OF FLUX RESIDUE
4.0 ROTATE LEAD FRAMES TO THE HORIZONTAL POSITION & ENCAPSULATE PER PROCEDURE P-21275 (SEE FIG. 2).
5.0 REMOVE COMPONENTS FROM FIXTURES
6.0 STAMP TOP SURFACE OF COMPONENTS
7.0 TRIM TIE BARS
8.0 FINAL TEST
9.0 FORM GULLWING
10.0 LOAD INTO SHIPPING TUBES

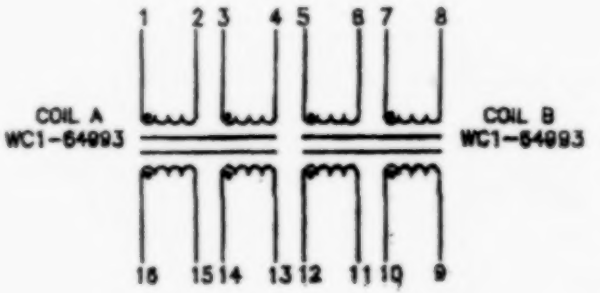

SCHEMATIC

B	01961	PE-65793	A
SCALE NONE		SHEET 2 OF 3	

NOTICE: THE INFORMATION AND DESIGN CONTAINED HEREIN IS THE PROPERTY OF PULSE ENGINEERING, INC. AND RESERVES ALL RIGHTS THEREIN.

TEST NOTES

1.0 TURNS RATIO 1.0VRMS 10KHZ (100%)

$$\frac{(1-4)}{(16-13)} = \frac{(5-8)}{(12-9)} = 1.0 +/-2\%$$

$$\frac{(1-2)}{(3-4)} = \frac{(16-15)}{(14-13)} = \frac{(5-6)}{(7-8)} = \frac{(12-11)}{(10-9)} = 1.0 +/-2\%$$

2.0 INDUCTANCE 1.0KHZ .02VRMS (100%)

(1-4) WITH (2-3) SHORT
(5-8) WITH (6-7) SHORT
=> 22mH MIN 0.0Adc 100%
20mH MIN 1mAdc (SAMPLE)

3.0 LEAKAGE INDUCTANCE 100KHZ .02V (SAMPLE)

(16-13) WITH (15-14),(1-4),(2-3)SHORT = 5uH MAX

(12-9) WITH (11-10),(5-8),(6-7)SHORT = 5uH MAX

4.0 CWW 100KHZ .02VRMS (SAMPLE)

(1,2,3,4)SHORT TO (16,15,14,13) = 100pF MAX

(5,6,7,8)SHORT TO (12,11,10,9) = 100pF MAX

5.0 DISTRIBUTED CAPACITANCE 1MHz (SAMPLE)

(1-4) WITH(2-3),(15-14)SHORT = 40pF MAX

(5-8) WITH (6-7),(11-10)SHORT = 40pF MAX

6.0 DCR VALHALLA 4100ATC (SAMPLE)

(1-4) = (5-8) = 2.4 +/- 15% Ohms

(16-13) = (12-9) = 2.4 +/- 15% Ohms

(1-2) = (3-4) +/- 2%

(5-6) = (7-8) +/- 2%

7.0 LONGITUDINAL BALANCE FIG. 1 (SAMPLE)

(1-4) INPUT, (16-13) OUTPUT 50KHZ - 300KHZ 60dB MIN

(5-8) INPUT, (12-9) OUTPUT 1MHz 48dB MIN

8.0 HIPOT (1-4) TO (16-13) 2000VRMS 1 MINUTE (100%)
(5-8) TO (12-9) 2200VRMS 6SEC

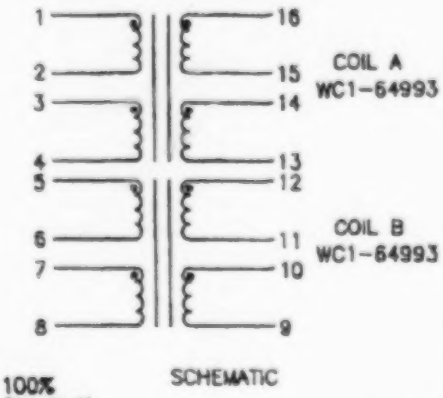

SCHEMATIC

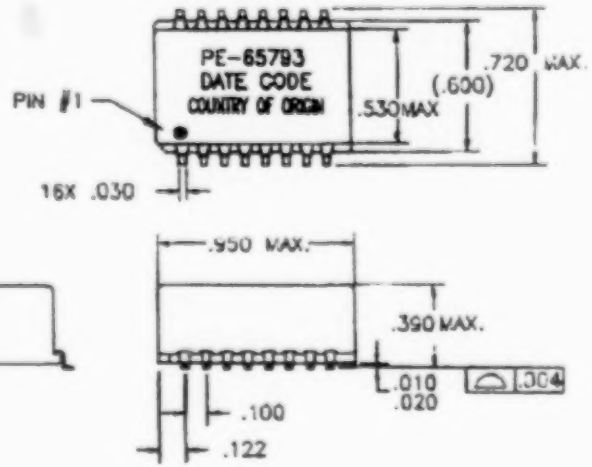

FINAL OUTLINE

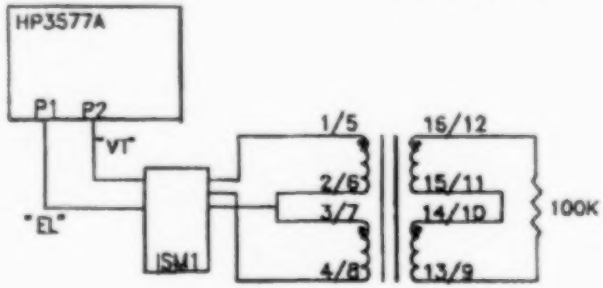

FIG. 1 LONGITUDINAL BALANCE

FINAL NOTES:

1.0 TEST 100% PER TEST NOTES 1.0,2.0 & 8.0.
2.0 SAMPLE TEST PER REMAINING NOTES.
3.0 TRIM LEADS PER FINAL OUTLINE

B	01961	PE-65793	A
SCALE NONE	CAD FILE 65793-3	SHEET 3 OF 3	

Pulse Engineering Inc.
San Diego, California 92112

CUSTOMER CATALOG PE – 65793
JOB NUMBER _____ REV _____

LIST OF MATERIALS

ITEM NO.	QTY REQD	PART NUMBER	DESCRIPTION	SPECIFICATIONS OR NOTES
1	2	WC1-64993	WOUND COIL ASSEMBLY	
2	± 2	024-0170.001	LEAD FRAME	
3	1	043-1241.001	CASE - 16 PIN	
4	GL .0005	081-0185.001	EPOXY XT5038-6	AMICON
5	GL .00005	081-0185.002	HARDENER B-100	AMICON
6	A/R	081-0176.001	COATING 1-2577	
7	A/R	081-0174.002	CATALYST #176	
8	A/R	083-0054.001	SOLDER Sn10 BAR	
9	A/R	082-0007.001	INK: MARKEM 9060	

TEXT FIXTURE AND/OR PROCEDURE

NOTES:

1.0 IN THE EVENT OF CONFLICT BETWEEN THIS SPECIFICATION AND THE CUSTOMER SPECIFICATIONS, THE LATTER SHALL GOVERN.

2.0 INTERPRET THIS SPECIFICATIONS PER MIL-D-1000 AND STANDARDS REFERENCED THEREIN

3.0 ALL TEST CONDITIONS PER MIL-STD-202, PARA2.2, EXCEPT TEMPERATURE TO BE 25 ±5°C.

PRIORIDAD
Orden Prototipo
TENTATIVE

PJ12513CPK Qty 25 /s/ [Illegible] 9/17/91

LTR	DESCRIPTION	ECO NO.	DATE	APPROVED

REV STATUS REVISION
OF SHEETS SHEET 1 2 3 4 5 6 7 8 9 10 11 12 13 14 15 16 17 18 19 20 21 22 23

NOTICE: THE INFORMATION AND DESIGN CONTAINED HEREIN IS THE PROPERTY OF PULSE ENGINEERING, INC. AND RESERVES ALL RIGHTS THERETO.

UNLESS OTHERWISE SPECIFIED, DIMENSIONS IN INCHES BEFORE PLATING.
TOLERANCES ON:
FRACTIONS = ± _____
ANGLES = ± _____
DECIMALS: 0.XX = ± _____
0.XXX = ± _____

REF: CUSTOMER CATALOG
DRAWING _____ REV _____
DATE _____ ☐ EXCEPTIONS; NOTE _____

		DATE
DRAWN		
CHECKED		
ENG.APPD.		
PROJ.APPD.		
APPROVED		

Pulse Engineering, Inc.
San Diego, California 92112

TITLE
TRANSFORMER
ISDN, SMT

SIZE	CODE IDENT.	DRAWING NO.	REV
		PE-65793	XO1

SCALE = | OK /s/ [Illegible] 9/17/91 | SHEET 1 of 3

NOTICE: THE INFORMATION AND DESIGN CONTAINED HEREON IS THE PROPERTY OF PULSE ENGINEERING INC. AND IS RESERVED. ALL RIGHTS THEREIN.

WINDING DATA

	COIL A		COIL B	
WINDING				
WIRE SIZE				
TRAVERSE				
TURNS/LAYER				
LAYER INSULATION	SEE WC1-64993		SEE WC1-64993	
NUMBER OF LAYERS	FOR LATEST DESIGN		FOR LATEST DESIGN	
TOTAL TURNS				
INSULATION				
LEAD IDENT.				

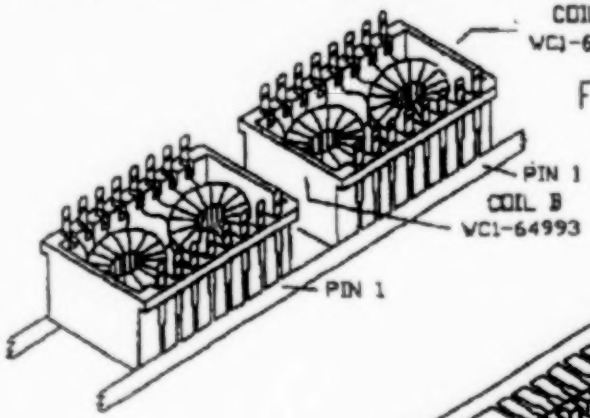

FIG. 1

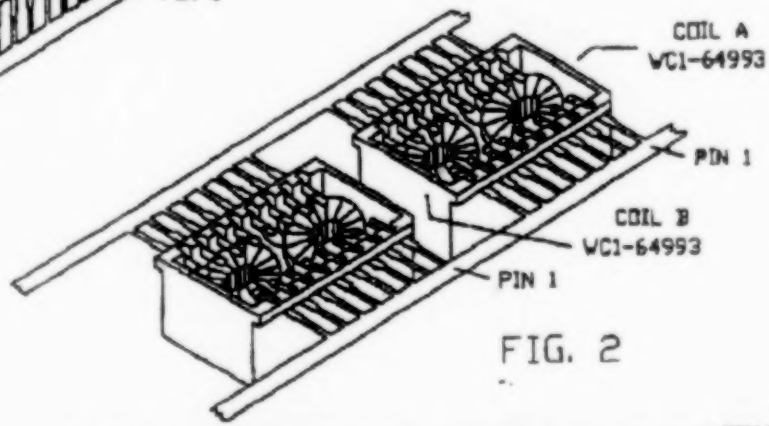

FIG. 2

ASSEMBLY NOTES:

1.0 DIP TWO TIMES IN SILICON 1-2577 PER P20913 PROCEDURE (2 COILS)
2.0 PLACE THE COILS INTO CASE AND TERMINATE WIRES TO ASSIGNED LEADS (SEE FIG. 1).
3.0 FLUX DIP LEAD TIPS, SOLDER DIP LEAD TIPS AND CLEAN ASSEMBLY OF FLUX RESIDUE
4.0 ROTATE LEAD FRAMES TO THE HORIZONTAL POSITION & ENCAPSULATE PER PROCEDURE P20964 (SEE FIG. 2).
5.0 REMOVE COMPONENTS FROM FIXTURES
6.0 STAMP TOP SURFACE OF COMPONENTS
7.0 TRIM TIE BARS
8.0 FINAL TEST
9.0 FORM GULLWING
10.0 LOAD INTO SHIPPING TUBES

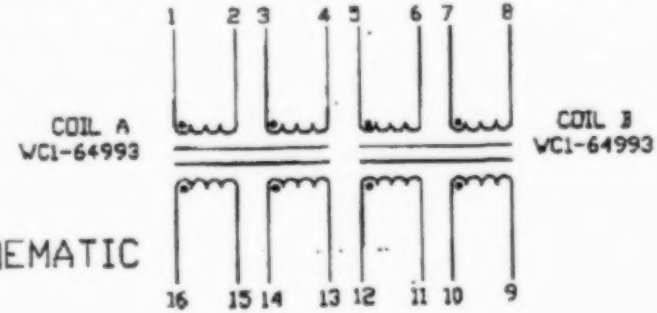

SCHEMATIC

SIZE	CAGE IDENTIFICATION	DRAWING NUMBER	REV
B	01961	PE-65793	X01
SCALE		SHEET 2 OF 3	

NOTICE: THE INFORMATION AND DESIGN CONTAINED HEREON IS THE PROPERTY OF PULSE ENGINEERING INC. AND RESERVED ALL RIGHTS THEREIN.

TEST NOTES

1.0 TURNS RATIO 1.0VRMS 10KHZ (100%)

$\frac{(1-4)}{(16-13)} = \frac{(5-8)}{(12-9)} = 1.0 +/-2\%$

$\frac{(1-2)}{(3-4)} = \frac{(16-15)}{(14-13)} = \frac{(5-6)}{(7-8)} = \frac{(12-11)}{(10-9)} = 1.0 +/-2\%$

2.0 INDUCTANCE 1.0KHZ .01VRMS (100%) 20mV

(1-4) WITH (2-3) SHORT => 22nH MIN 8.0Adc 100%

(5-8) WITH (6-7) SHORT 20nH MIN 1mAdc (SAMPLE)

3.0 LEAKAGE INDUCTANCE 100KHZ .02V (SAMPLE)

(16-13) WITH 15-14),(1-4),(2-3)SHORT = 5uH MAX

(12-9) WITH (11-10),(5-8),(6-7)SHORT = 5uH MAX

4.0 CVW 100KHz .02VRMS (SAMPLE)

(1,2,3,4)SHORT TO (16,15,14,13) = 100pF MAX

(5,6,7,8)SHORT TO (12,11,10,9) = 100pF MAX

5.0 DISTRIBUTED CAPACITANCE 1MHZ (SAMPLE)

(1-4) WITH(2-3),(15-14)SHORT = 40pF MAX

(5-8) WITH (6-7),(11-10)SHORT = 40pF MAX

6.0 DCR VALHALLA 4100ATC (SAMPLE)

(1-4) = (5-8) = 2.4 +/- 15% Ohms

(16-13) = (12-9) = 2.4 +/- 15% Ohms

7.0 LONGITUDINAL BALANCE FIG. 1 (SAMPLE)

(1-4) INPUT, (16-13) OUTPUT 50KHZ - 300KHZ 60dB MIN

(5-8) INPUT, (12-9) OUTPUT 1MHz 48dB MIN

8.0 RISE TIME FIG. 2 RS = 100OHMS, RL=50 OR 400 OHMS. (SAMPLE)

INPUT (1-4) OR (5-8) 400nS INPUT RISETIME

OUTPUT (16-13) OR (12-9) = 470nS MAX

9.0 HIPOT (1-4) TO (16-13) 2000VRMS 1 MINUTE (100%)

(5-8) TO (12-9) 2200VRMS 6SEC

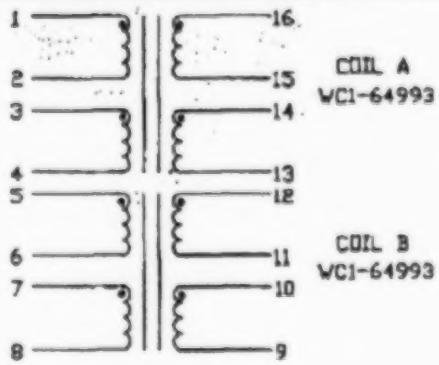

SCHEMATIC

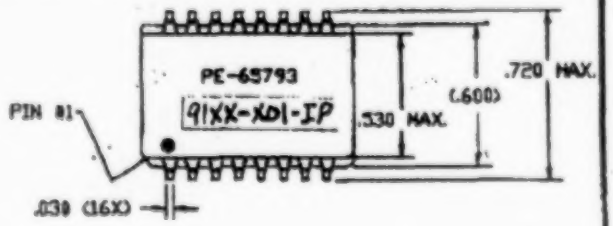

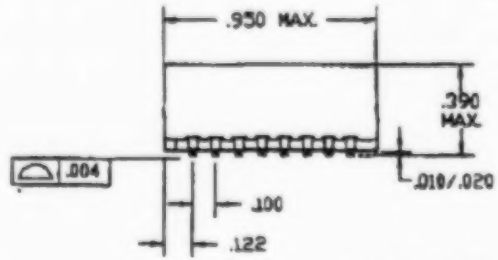

FINAL OUTLINE

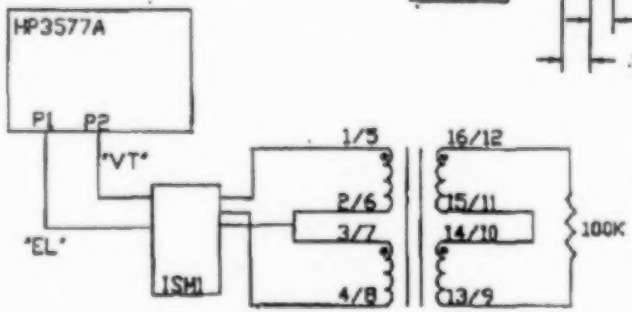

FIG. 1 LONGITUDINAL BALANCE

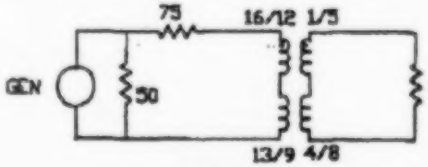

FIG. 2
RISETIME

FINAL NOTES:

1.0 TEST 100% PER TEST NOTES 1.0,2.0 & 9.0

2.0 SAMPLE TEST PER REMAINING NOTES.

3.0 TRIM LEADS PER FINAL OUTLINE

SIZE	CODE IDENTIFICATION	DRAWING NUMBER	REV
B	01961	PE-65793	X01
SCALE		SHEET 3 of 3	

NOTICE: THE INFORMATION AND DESIGN CONTAINED HEREIN IS THE PROPERTY OF PULSE ENGINEERING, INC. AND RESERVED ALL RIGHTS THERETO.

WINDING DATA

WINDING	SEC A	SEC B	PRI A	PRI B
WIRE SIZE	38QPN R	38QPN G	38QPN N	38QPN G
TRAVERSE	350	350	350	350
TURNS/LAYER				
LAYER INSULATION				
NUMBER OF LAYERS				
TOTAL TURNS	34	34	34	34
INSULATION				
LEAD IDENT.	4. 5	5. 6	1. 2	2. 3

IT.2 TWISTED — IT.3 TWISTED

BIFILAR

REVISIONS					
ZONE	LTR	DESCRIPTION	ECO NUMBER	DATE	APPROVED
	D	CHANGE PER ECN	22948	2/21/91	AD
	F	CHANGE PER ECN	22960	3/14/91	
	G	CHANGE PER E C N	PL23024	5/3/91	

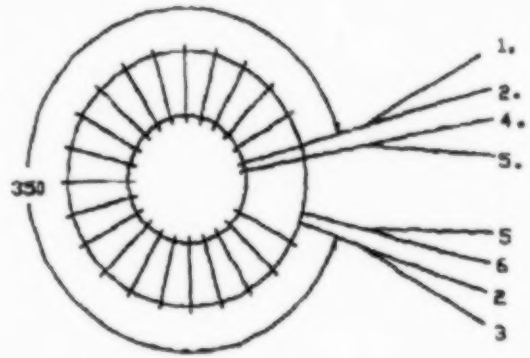

NOTES:

1. WIND FULL COIL ON TWISTED WIRE KENT MACHINE.
2. SAMPLE TEST PER TEST NOTES:
   - 2.1 TURNS RATIO: 1V 10KHZ
     (1-3)/(4-6) = 1.0+/-2%
   - 2.2 INDUCTANCE 100KHZ ,02V
     (1-3) = 22mH MIN
   - 2.3 LEAKAGE 100KHZ .02V
     (4-6) TO (1-3) Y (5-5)
     (2-2) SHORT
     [illegible] MAX.

ENG. RELEASED

ITEM	QTY	PART NO.	DESCRIPTION	CODE IDENT	MFR'S PART NO.	SPECIFITION
6		094-SP380-0191	WIRE: 38Q E/N T80 BOND			
5		094-SP380-0179	WIRE: 38Q E/G T80 BOND			
4		021-0478AAE	CORE YW-41005-TC		MAG INC	[illegible]
3		094-SP380-0192	WIRE 38Q R/N T120 BOND			ALT-6
2		094-SP380-0194	WIRE 38Q R/G T120 BOND			ALT-5
1		021-0438AAE	CORE LTA-AQ5C-5D/1P		KRYST.	ALT-4

LIST OF MATERIALS

NEXT ASSY	USED ON
APPLICATION	

DRAWN M McV

CHECKED Rodriguez

ENGG APPR

PROJ APPR

APPROVED

MATERIAL:

FINISH:

Pulse Engineering, Inc.
San Diego California 92112

TITLE
WOUND COIL, ISDN

SIZE	CODE IDENTIFICATION	DRAWING NUMBER	REV
B	01961	WC1-64993	G

SCALE NONE — SHEET 1 OF 1

[LOGO] **PULSA PROTOTYPES.**

TEST DATA SHEET.

PE-65793		**CUSTOMER:**	CATALOG	**DATE:**	2-Nov-91
CORE:		**TURNS:**	Twist. 34v bifilar	**WIRE:**	38 Q
WDG. GEOM.		**GAP:**		**IN PROCESS:**	
HEAD/CASE:		**COATING:**		**FINAL:**	
WDG. TYPE:	bobinado Automatico	**TECHNICIAN:**	Adriana V.		

SPECIFICATION:

	(1-4) with S/B (2-3) SHT OCL	(5/8) with C/B (6-7) SHT OCL	(16-13) with (15-14) (1-4) (2-3) SHT LL	(12-9) with (11-10) (5-8) SHT (6-7) LL	(1,2,3,4) TO (16,15,14,13) CWW	(5,6,7,8) TO (12,11,10,9) CWW
1	27.13	27.30	2.95	2.83	44.41	44.19
2	28.10	24.29	2.26	2.56	44.28	42.37
3	28.35	27.09	2.67	2.23	35.88	42.65
4	28.16	25.01	2.29	2.21	43.26	42.18
5	27.26	25.89	2.02	2.57	45.30	44.26
6	26.01	27.05	2.51	3.27	44.00	40.80
7						
8	25.82	24.52	2.41	2.19	43.40	44.07
9	26.53	26.95	2.28	2.52	41.86	40.15
10						
	22 mH MIN 0 ADC 1 KHZ 20 MV 4284 A	20 mH MIN 1mADC 1 KHZ 20 MV 4284 A	5 mH MAX 100 KHZ 20 MV 4284 A	5 mH MAX 100 KHZ 20 MV 4284 A	100 pf MAX 100 KHZ 20 MV 4284 A	100 pf MAX 100 KHZ 20 MV 4284 A

/s/ [Illegible]

[LOGO] **PULSA PROTOTYPES.**

TEST DATA SHEET.

PE-65793		**CUSTOMER:**	CATALOG	**DATE:**	2-Nov-91
CORE:		**TURNS:**	Twist. 34v bifilar	**WIRE:**	38 Q
WDG. GEOM.		**GAP:**	N/A	**IN PROCESS:**	
HEAD/CASE:		**COATING:**		**FINAL:**	
WDG. TYPE:	bobinado Automatico	**TECHNICIAN:**	Adriana V.		

SPECIFICATION:

	(1-4) with (2-3) (15-14) SHT COL	(5-8) with (6-7) (11-10) SHT COL	(1-4) DCR	(5-8) DCR	(16-13) DCR	(12-9) DCR
1	30.64	30.48	2.50	2.43	2.34	2.37
2	30.33	30.24	2.43	2.44	2.38	2.37
3	28.82	30.31	2.45	2.40	2.34	2.37
4	30.52	30.35	2.50	2.48	2.39	2.39
5	29.82	30.43	2.48	2.53	2.41	2.40
6	29.42	30.16	2.49	2.42	2.38	2.38
7						
8	29.40	28.75	2.44	2.40	2.35	2.35
9	29.01	30.23	2.42	2.42	2.39	2.32
10						
	40 pf MAX 1 MHz 4284 A	40 pf MAX 1 MHz 4284 A	2.04 Ω MAX 2.76 Ω MAX 4100 ATC	2.04 Ω MAX 2.76 Ω MAX 4100 ATC	2.04 Ω MAX 2.76 Ω MAX 4100 ATC	2.04 Ω MAX 2.76 Ω MAX 4100 ATC

/s/ [Illegible]
11/5/91

[LOGO] **PULSA PROTOTYPES.**

TEST DATA SHEET.

PE-65793		**CUSTOMER:**	CATALOG	**DATE:**	5-Nov-91
CORE:		**TURNS:**	Twist. 34v bifilar	**WIRE:**	38 Q
WDG. GEOM.		**GAP:**	N/A	**IN PROCESS:**	
HEAD/CASE:		**COATING:**		**FINAL:**	
WDG. TYPE:	bobinado Automatico	**TECHNICIAN:**	Adriana V.		

SPECIFICATION:

	TR	Pol.	Hipot	Rise T.	Rise T.	
1	0 K	0 K	0 K	392	384	
2	0 K	0 K	0 K	381	388	
3	0 K	0 K	0 K	385	382	
4	0 K	0 K	0 K	387	390	
5	0 K	0 K	0 K	384	391	
6	0 K	0 K	0 K	388	388	
7						
8	0 K	0 K	0 K	389	385	
9	0 K	0 K	0 K	391	393	
10						
				470 ns MAX	470 ns MAX	/s/ [Illegible] 11/5/91

[LOGO] **PULSA PROTOTYPES.**

TEST DATA SHEET.

PE-65793		**CUSTOMER:**	CATALOG	**DATE:**	5-Nov-91
CORE:		**TURNS:**	Twist. 34v bifilar	**WIRE:**	38 Q
WDG. GEOM.		**GAP:**	N/A	**IN PROCESS:**	
HEAD/CASE:		**COATING:**		**FINAL:**	
WDG. TYPE:	bobinado Aut	**TECHNICIAN:**	Adriana V.		

SPECIFICATION:

	50 KHZ	300 KHz	1 MHz	50 KHz	300 KHz	1 MHz
1	-69.81	-63.83	-54.34	-70.20	-63.95	-54.21
2	-70.39	-63.99	-54.02	-69.99	-63.73	-54.34
3	-70.55	-63.07	-54.25	-70.23	-63.98	-54.27
4	-70.62	-63.65	-54.23	-69.75	-63.43	-54.19
5	-70.95	-63.36	-54.36	-69.36	-63.52	-54.20
6	-70.09	-63.47	-54.10	-70.23	-67.77	-54.18
7						
8	-69.43	-63.81	-54.22	-69.85	-63.89	-54.31
9	-70.03	-63.77	-54.27	-70.34	-63.57	-54.18
10						
	60 dB MIN	60 dB MIN	48 dB MIN	60 dB MIN	60 dB MIN	48 dB MIN /s/ [Illegible] 11/5/91

[LOGO] **INDUSTRIAS PULSA DE C.V.**

TEST DATA SHEET

CUST. P.N. J AIDACO *REV.* B PE- 65793 *REV.* B DATE CODE 923B

INSPECTOR Rosalba *DATE* 17-Agosto-92

NO	TURNS RATIO POL	CWW	CWW	OCL	OCL	OCL	OCL	LL	LL	CD	CD	DCR	DCR	DCR	DCR	HIPOT	
1	OK	66.91	71.90	27.02	25.56	24.07	22.55	1.86	1.96	29.22	30.19	2.51	2.53	2.41	2.39	OK	
2	OK	70.33	65.29	25.35	23.68	25.20	22.88	2.21	2.19	28.84	28.60	2.55	2.51	2.40	2.41	OK	
3	OK	68.72	68.06	27.31	25.68	27.03	24.40	2.86	2.06	28.77	27.95	2.52	2.54	2.44	2.41	OK	
4	OK	69.63	73.48	24.69	23.31	29.54	25.66	2.31	1.73	28.93	28.66	2.54	2.54	2.41	2.40	OK	
5	OK	67.99	68.05	25.14	23.66	24.94	23.20	3.76	2.18	30.10	29.24	2.52	2.55	2.42	2.41	OK	
6	OK	70.46	68.70	24.88	23.74	23.67	21.93	1.54	2.16	29.71	28.94	2.55	2.59	2.40	2.42	OK	
7	TR*	68.46	70.42	25.50	23.47	24.52	22.63	1.89	1.99	25.84	30.27	2.39	2.31	2.52	2.52	OK	
8	OK	70.63	68.25	23.29	22.02	25.44	23.74	2.30	2.91	27.63	30.76	2.57	2.54	2.41	2.42	OK	
9	OK	68.47	62.51	26.28	24.54	28.14	24.44	2.31	3.04	29.47	28.27	2.53	2.53	2.40	2.41	OK	
0	OK	68.92	67.97	27.35	25.07	23.67	22.79	2.95	2.20	28.50	29.74	2.55	2.57	2.43	2.43	OK	
1		100 KHz .02 VRMS 100PF MAXIMUM	100 KHz .02 VRMS 100PF MAXIMUM	1.0 KHz .02 VRMS 22MH MIN	1.0 KHz .02 VRMS 20 MH MIN IMADC	1.0 KHz .02 VRMS 22MH MIN	1.0 KHz .02 VRMS 20MH MIN IMADC	100 KHz .02 V 50UH MAXIMUM	100 KHz .02 V 50UH MAXIMUM	1 MHz SAMPLE 42 PF MAXIMUM	1 MHz SAMPLE 42PF MAXIMUM	2.04 MIN-2.76 MAX OHMS	2.04 MIN-2.76 MAX OHMS	2.04 MIN-2.76 MAX OHMS	2.04 MIN-2.76 MAX OHMS	2200 VRMS 6/SEC.	
2																	
3																	
4																	
5																	
6																	
7																	
8																	
9																	
0																	

COMMENTS * PIEZA MALA OK

/s/ [Illegible] 8/17/92

[LOGO] **INDUSTRIAS PULSA DE C.V.**

TEST DATA SHEET

CUST. P.N. J AIDACO *REV.* B PE- 65793 *REV.* B DATE CODE 9233

INSPECTOR Rosalba *DATE* 17-Agosto-92

NO	50 KHz	300 KHz	1 MHz			50 KHz	300 KHz	1 MHz									
1	70.25	63.81	54.26			70.22	63.64	54.22									
2	70.45	63.67	54.24			70.11	68.74	54.30									
3	70.10	63.89	54.28			70.18	63.96	54.33									
4	70.23	63.67	54.29			69.97	63.79	54.35									
5	70.15	63.68	54.29			69.89	63.61	54.33									
6	70.26	63.73	54.26			69.92	63.66	54.31									
7	70.21	63.76	54.30			69.99	63.89	54.34									
8	70.19	63.83	54.28			70.26	63.87	54.40									
9	70.10	63.93	54.26			70.43	63.89	54.32									
0	70.33	63.84	54.31			70.25	63.83	54.27									
1	60 dB MIN	60 dB MIN	48 dB MIN			60 dB MIN	60 dB MIN	48 dB MIN									
2																	
3																	
4																	
5																	
6																	
7																	
8																	
9																	
0																	

COMMENTS OK

/s/ [Illegible] 8/17/92

Supreme Court
FILED
DEC - 9 2
OFFICE OF THE

No. 14-1513

In the Supreme Court of the United States

HALO ELECTRONICS, INC.,

Petitioner,

v.

PULSE ELECTRONICS, INC.,
PULSE ELECTRONICS CORPORATION,

Respondents.

On Writ of Certiorari to the United States Court of Appeals for the Federal Circuit

PETITIONER'S OPENING BRIEF

CRAIG E. COUNTRYMAN
Counsel of Record
Fish & Richardson P.C.
12390 El Camino Real
San Diego, CA 92130
(858) 678-5070
countryman@fr.com

MICHAEL J. KANE
WILLIAM R. WOODFORD
JOHN A. DRAGSETH
Fish & Richardson P.C.
3200 RBC Plaza
60 South Sixth Street
Minneapolis, MN 55402
(612) 335-5070

Counsel for Petitioner Halo Electronics, Inc.

QUESTION PRESENTED

Whether the Federal Circuit erred by applying a rigid, two-part test for enhancing patent infringement damages under 35 U.S.C. § 284, that is the same as the rigid, two-part test this Court rejected last term in *Octane Fitness, LLC v. ICON Health & Fitness, Inc.*, 134 S. Ct. 1749 (2014) for imposing attorney fees under the similarly-worded 35 U.S.C. § 285.

RULES 14.1(b) AND 29.6 STATEMENT

All parties are identified in the caption of this petition. No publicly held corporation owns 10% or more of Halo Electronics, Inc.

TABLE OF CONTENTS

Page

QUESTION PRESENTED i
RULES 14.1(b) AND 29.6 STATEMENT ii
OPINIONS BELOW 1
JURISDICTION 1
CONSTITUTIONAL, STATUTORY, AND REGULATORY PROVISIONS INVOLVED 1
INTRODUCTION 2
STATEMENT OF THE CASE 3
A. Pulse Copied Halo's Invention and Then Expanded Its Infringement After Spurning Halo's Invitations to License. 3
B. The Proceedings Below 6
1. The District Court Was Bound by the Federal Circuit's Rigid, Erroneous Test for Enhancement 6
2. The Federal Circuit Failed to Follow This Court's 2014 Decision in Octane. 7
SUMMARY OF THE ARGUMENT 10
ARGUMENT 12
I. Section 284 Gives District Courts Flexibility to Balance All Relevant Facts When Deciding to Enhance Damages. 12
A. The Statutory Text Is Plain and Broad. 12
B. The Application of § 284's Predecessors Provided Flexibility for District Courts. 13
C. The Lower Courts Also Recognized § 284's Broad Language and Applied a Flexible Standard Before *Seagate* 16

TABLE OF CONTENTS—continued

Page

D. *Octane* and *General Motors* Require Enforcing § 284 as Written. 18

II. The Federal Circuit Has No Support for Its Application of § 284 19

A. There Is No Support for Requiring Willful Infringement to Enhance Damages 20

B. The Federal Circuit's Two-Part "Willfulness" Test Conflicts with the Statute 21

C. There Is No Basis for the Federal Circuit's "Any-Defense-at-Any-Time" Approach. 24

D. The Federal Circuit's Standards of Proof and Appellate Review Are Unsupported. 25

III. This Court Should Restore Enhanced Patent Damages Law to the Flexible Inquiry Required by § 284. 27

IV This Court Should Vacate the Judgment and Remand So the District Court Can Apply the Correct Legal Standard. 29

CONCLUSION 30

TABLE OF AUTHORITIES

Page(s)

Cases

Am. Safety Table Co. v. Schreiber,
415 F.2d 373 (2d Cir. 1969) 16

Aro Mfg. Co. v. Convertible Top Replacement Co.,
377 U.S. 476 21

Bard Peripheral Vascular, Inc. v. W.L. Gore & Associates, Inc.,
682 F.3d 1003 (Fed. Cir. 2012) 26

Brooks Furniture Manufacturing, Inc. v. Dutailier International, Inc.,
393 F.3d 1378 (Fed. Cir. 2005) 8, 26

Carneige Mellon Univ. v. Marvell Tech. Gp.,
2015 WL 4639309 (Fed. Cir. Aug. 4, 2015) 24, 28

Day v. Woodworth,
54 U.S. 363 (1851) 15, 20

General Motors Corp. v. Devex Corp.,
461 U.S. 648 (1983) 15, 18, 19

Global Traffic Techs., LLC v. Morgan,
__ F. App'x __, 2015 WL 3513416
(Fed. Cir. June 4, 2015) 24, 28

Highmark, Inc. v. Allcare Health Management Sys., Inc., 134 S. Ct. 1744 (2014) 26

iLOR, LLC v. Google, Inc., 631 F.3d 1372 (Fed. Cir. 2011) 24

Innovention Toys, LLC v. MGA Entm't, Inc., 611 Fed. Appx. 693 (Fed. Cir. 2015) 28

Jurgens v. CBK, Ltd., 80 F.3d 1566 (Fed. Cir. 1996) 12, 20

Kloster Speedsteel AB v. Crucible, Inc., 793 F.2d 1565 (Fed. Cir. 1986) 22

Knorr-Bremse Sys. v. Dana Corp., 383 F.3d 1337 (Fed. Cir. 2004) (en banc) 22, 24, 25

Lam, Inc. v. Johns-Manville Corp., 668 F.2d 462 (10th Cir. 1982) 16

Martin v. Frankline Capital Corp., 546 U.S. 132 136 (2005) 12

New York Trust Co. v. Eisner, 256 U. S. 345 (1921) (Holmes, J.) 13

Octane Fitness, LLC v. ICON Health & Fitness, Inc., 134 S. Ct. 1749 (2014) ..... *passim*

Professional Real Estate Investors, Inc. v. Columbia Pictures Industries, Inc., 508 U.S. 49 (1993) 26

Read Corp. v. Portec, Inc.,
970 F.2d 816, 827-28 (Fed. Cir. 1992) ..... *passim*

Root v. Railway Co.,
105 U.S. 189 (1882) 14

Safeco Insurance Co. of Am. v. Burr,
551 U.S. 47 (2007) 23

In re Seagate Technology, LLC,
497 F.3d 1360 (Fed. Cir. 2007) (*en banc*) ..... *passim*

Sebelius v. Cloer,
133 S. Ct. 1886 (2014) 12

Seymour v. McCormick,
57 U.S. 480 (1854) 14, 15, 28

Spine Solutions, Inc. v. Medtronic Sofamor Danek USA, Inc.,
620 F.3d 1305 (Fed. Cir. 2010) 24

Teese v. Huntingdon,
64 U.S. 2 (1860) 15, 20

Tilghman v. Proctor,
125 U.S. 136 (1888) 15

Topliff v. Topliff,
145 U.S. 146,164 (1892) 25

Trio Process Corp. v. L. Goldstein's Sons, Inc.,
638 F.2d 661 (3d Cir. 1981) 16

Underwater Devices, Inc. v. Morrison-Knudsen Co., 717 F.2d 1380 (Fed. Cir. 1983) 22

Union Carbide Corp. v. Graver Tank & Mfg. Co., 282 F.2d 653 (7th Cir. 1960) 16

Univ. of Pittsburgh of the Commonwealth Sys. of Higher Educ. v. Varian Med. Sys., 561 Fed. Appx. 934 (Fed. Cir. 2014) 28

WesternGeco L.L.C. v. Ion Geophysical Corp., 791 F.3d 1340 (Fed. Cir. 2015) 28

Statutes

15 U.S.C. § 1681n(a) 23

35 U.S.C. § 67 (1946 ed.) 14

35 U.S.C. § 284 ..... *passim*

35 U.S.C. § 285 ..... *passim*

Patent Act of 1793, Ch 11, § 5 13

Patent Act of 1800, Ch. 25, § 3 13

Patent Act of 1836, ch. 357, 5 Stat. 117 (1836) 14

Patent Act of 1870, ch. 230, § 59, 16 Stat. 198, 207 (1870) 14

Other Authorities

S. Rep. No. 79-1503, at 2 (1946)..... 17

OPINIONS BELOW

The district court granted judgment as a matter of law of no willful infringement, as reported at 2013 WL 2319145 (D. Nev. May 28, 2013), and reproduced at Pet. App. 32a-67a. The court of appeals affirmed the judgment, (Pet. App. 1a-31a), as reported at 769 F.3d 1371 (Fed. Cir. 2014), and denied rehearing *en banc* (Pet. App. 137a-154a), as reported at 780 F.3d 1357 (Fed. Cir. 2015).

JURISDICTION

The Federal Circuit's panel opinion issued on October 22, 2014, and that Court denied a timely rehearing petition on March 23, 2015. Halo petitioned for *certiorari* on June 22, 2015, and this Court granted *certiorari* on October 19, 2015. This Court has jurisdiction under 28 U.S.C. § 1254(1).

CONSTITUTIONAL, STATUTORY, AND REGULATORY PROVISIONS INVOLVED

35 U.S.C. § 284 provides in relevant part:

> Upon finding for the claimant the court shall award the claimant damages adequate to compensate for the infringement, but in no event less than a reasonable royalty for the use made of the invention by the infringer, together with interest and costs as fixed by the court.
>
> When the damages are not found by a jury, the court shall assess them. In either event the court may increase the damages up to three times the amount found or assessed.

INTRODUCTION

This appeal centers on the construction of a statute with text that is plain and broad that was historically applied in a flexible manner. For reasons untethered to either interpretive source, the Federal Circuit has adopted a narrow, rigid framework that repeats the same type of error this Court recently corrected in *Octane Fitness, LLC v. ICON Health & Fitness, Inc.*, 134 S. Ct. 1749 (2014) for a similar statute.

Section 284 says simply that "the court may increase the damages up to three times the amount found or assessed." The text imposes no bright-line rules, and permits district judges to address any factual scenario that may justify treble damages, some lesser enhancement, or even no enhancement at all. The statute parallels 35 U.S.C. § 285, which says that a "court in exceptional cases may award reasonable attorney fees to the prevailing party." *Octane* eliminated the Federal Circuit's two-part test for attorney fees, calling it an "inflexible framework" for "inherently flexible" statutory text. Section 284 is broader than Section 285 (it is not limited to "exceptional cases"), yet the Federal Circuit continues to engraft a similar inflexible framework as a prerequisite to enhancing damages. For example, the Federal Circuit bars enhancement if a defendant presents a "non-sham" trial defense, even if it was developed only after years of copying and other bad behavior.

Section 284 should be returned to a plain, "inherently flexible" analysis that, once again, allows district courts to consider and balance all relevant factors when assessing enhancement. The Federal Circuit's rigid *per se* rule ties the hands of judges and lets bad faith infringers off the hook.

STATEMENT OF THE CASE

A. Pulse Copied Halo's Invention and Then Expanded Its Infringement After Spurning Halo's Invitations to License.

1. This suit concerns Halo's patented packaging for "surface mount" transformers, a common circuit component in devices ranging from laptops and networking equipment to heart rate monitors and automobiles. These packages must withstand the expansion of internal components as they are heat-soldered or otherwise attached to the surface of circuit boards. Before Halo's invention, this tremendous heat would often cause the package to crack and fail, imposing enormous costs on customers. (J.A. 21-22, 44-52, 164-165.) These failures plagued everyone in the industry. (*Id.*) Halo's invention solved this problem, which many others, including Pulse, had tried and failed to solve for years. (*Id.*)

Halo began work on its invention in late 1993 and spent months perfecting its patented design. (Dkt. No. 435 at 35-47, 217-38, Dkt. No. 442 at 203-07.) Failure was not an option—Halo is a 15-employee family-owned company, and the surface-mount transformer was its flagship product. (Dkt. No. 435 at 7-13; Dkt. No. 440 at 51-54.) Without a solution, Halo would have been out of business. (*Id.*) While others had focused on tightly encapsulating the materials inside the package, Halo devised an "open construction," that allowed for expansion during heating. (Pl. Trial Exs. 1, 2, 5.) Halo's "open construction" had several other unique features that distinguished it from prior open bottom products, including a critical way of molding the "terminal pins" that attach to the circuit board within the package walls and connecting them to the wires inside the package. (*Id.*)

When Halo introduced the new package to customers, they were initially skeptical it would work. (J.A. 25-28, 55-57.) But the invention's superior performance overcame these worries, and, by 1997, Halo's customers for the patented products included industry stalwarts like Cisco.

2. Pulse, which has about 10,000 employees, had for years been trying to solve the cracking problem, even before Halo's founding. Pulse introduced a variety of unsuccessful designs starting in the mid-1980s and continued to promote those products until Halo's first patent issued, which disclosed its design to competitors. (U.S. Patent 5,015,981 at 1:57-2:3, Figs. 1 & 5; U.S. Patent 5,212,345 at 1:33-43, 3:35-36; J.A. 165-169; Pl. Trial Ex. 154.) Pulse's early-1990s publications criticized Halo's design approach, while touting a different attempt at a solution. (*Id.*) Pulse ultimately failed. Its employees admitted that its design "will crack during the [solder] reflow process" used to affix those transformers to circuit boards. They described this as a "typical failure," and believed "this is a killer for us." (Pl. Trial Ex. 310.)

So Pulse copied. A Pulse engineer saw Halo's first patent in 1998. (J.A. 62-63, 148-151.) That same year, Pulse introduced products with the exact construction disclosed in Halo's patents. (Dkt. No. 464 at 87.) Once Pulse adopted the Halo design, its sales of infringing products soon dwarfed Halo's. (Pl. Trial Ex. 380c.) But, for years, Pulse management did nothing to analyze or investigate its infringement of the patents, even though Pulse employees kept running into Halo's patents. (J.A. 62-63, 148-153.)

The much-smaller Halo could not stop Pulse's infringement. It sent Pulse two mid-2002 invitations to negotiate a license. (J.A. 195-198.) But Pulse never

responded. Meanwhile, Pulse's corporate representative admitted that "I'm not aware of anyone in the company that I know of that made a conscious decision" that Pulse could sell the infringing products after receiving Halo's letters. (J.A. 66-67, 148.) Pulse counted on the fact that a small family business didn't have the resources to take legal action. And for a time, Pulse was right. Halo's financial pressures prevented it from filing suit until 2007 (Pet. App. 60a.)

Pulse never tried to design around Halo's patents and, instead, more than doubled its infringement. (J.A. 59-60, 136-37; Pl. Trial Ex. 380c.) Even after Halo sued, Pulse continued to expand its infringement. A 2008 Pulse email admitted that it was now trying to design "all" new products using Halo's "open" construction. (Pl. Trial Ex. 260.) A 2009 Pulse presentation went even further, explaining that not only would "all" new products use Halo's "open" construction, but that the plan was to "convert" any old models to Halo's "open" construction to meet new standards for lead-free products that required even higher soldering temperatures. (Pl. Trial Ex. 253.)

Pulse's only response at trial was the testimony of an engineer who said he had concluded in 2002 that the patents were invalid (though there were no records of his work). Pulse's corporate representative admitted that the engineer's alleged review was "cursory." (J.A. 132-34, 146-48.) Another Pulse engineer on the project admitted that the products on which his colleague had relied as allegedly invalidating were "irrelevant" to Halo's invention. (J.A. 126-27, 158-59.) In addition, the Pulse engineer who supposedly reviewed Halo's patents was unfamiliar with the relevant law and did not rely on legal advice from anyone in analyzing validity. (J.A. 132-36, 128-29.) Anyway,

the review turned out to be irrelevant, because no corporate decision-maker ever relied on it. (J.A. 147-48.)

B. The Proceedings Below

1. The District Court Was Bound by the Federal Circuit's Rigid, Erroneous Test for Enhancement

Halo sued in 2007 to stop Pulse from infringing three of its patents and sought enhanced damages, based in part on Pulse's willful infringement. (J.A. 15-18.) A jury found the patents valid and infringed, and awarded $1.5 million; the court then enjoined Pulse.

The jury rejected Pulse's defense that the patents were obvious, and credited evidence that showed (i) Pulse and others in the industry copied Halo's invention, (ii) Pulse's own prior publications taught away from Halo's invention, (iii) the Patent Office had already considered and distinguished materially similar prior art to what Pulse relied upon at trial, and (iv) other competitors had licensed Halo's technology based on its technical merits. (Pet. App. 38a-45a.)

The jury also found that Pulse's infringement was willful. (J.A. 191.) The jury was instructed that, to find willfulness, it would have to conclude that "Pulse acted with reckless disregard" of Halo's patents, *i.e.*, "that Pulse actually knew, or it was so obvious that Pulse should have known, that Pulse's actions constituted infringement of a valid patent." (J.A. 174-75.) The jury was also told to consider "whether Pulse acted in a manner consistent with the standards of commerce for its industry." (*Id.*) The jury thus concluded that Pulse acted in bad faith and inconsistently with commercial standards.

Despite these findings, the Federal Circuit's rigid test for § 284 prevented the district court from enhancing damages. That test makes willful infringement a necessary prerequisite to enhanced damages, and then further requires proof that the accused infringer (1) "acted despite an objectively high likelihood that its actions constituted infringement of a valid patent," and (2) "this objectively-defined risk (determined by the record developed in the infringement proceeding) was either known or so obvious that it should have been known to the accused infringer." *In re Seagate Technology, LLC*, 497 F.3d 1360, 1371-72 (Fed. Cir. 2007) (*en banc*). Although the jury found the second prong had been met, the district court concluded that the first prong was blocked because Pulse presented an invalidity defense at trial that "was not objectively baseless, or a sham." (Pet. App. 64a.)

2. The Federal Circuit Failed to Follow This Court's 2014 Decision in *Octane*.

While the present case was before the Federal Circuit, this Court decided *Octane Fitness, LLC v. Icon Health & Fitness, Inc.*, 134 S. Ct. 1749 (2014). That decision eliminated the rigid, two-step test for attorney fee awards under 35 U.S.C. § 285, and it was directly relevant to the application of 35 U.S.C. § 284 because of the parallels in the statutory text:

35 U.S.C. § 284	35 U.S.C. § 285
"***[T]he court may increase*** the damages up to three times the amount found or assessed."	"***The court in exceptional cases may award*** reasonable attorney fees to the prevailing party."

Nevertheless, the Federal Circuit panel—bound by the prior *en banc* decision in *Seagate*—was unable to apply *Octane's* holding to § 284. The panel thus affirmed the finding of no willfulness because Pulse raised "a substantial question as to obviousness of the Halo patents." (Pet. App. 21a.)

Judges O'Malley and Hughes, however, recognized that *Seagate* is "analogous" to the now-rejected § 285 attorney fee test and inconsistent with *Octane*:

> Our current two-prong, objective/subjective test for willful infringement set out in [*Seagate*] is analogous to the test this court prescribed for the award of attorneys' fees under § 285 in *Brooks Furniture Manufacturing, Inc. v. Dutailier International, Inc.*, 393 F.3d 1378, 1381–82 (Fed. Cir. 2005), *overruled by Octane Fitness*, 134 S. Ct. at 1757-58. The parallel between our tests for these two issues is not surprising. Both enhanced damages and attorneys' fees are authorized under similar provisions in title 35. . . .

(Pet. App. 26a.)

They urged their colleagues to reconsider the issue *en banc* because nothing in § 284's text supports the application of a rigid, two-prong test, just as *Octane* held that § 285 did not justified use of the two-prong test for attorney fees:

> Because we now know that we were reading *PRE* [the Federal Circuit's source for the two-prong attorney fee test] too broadly, and have been told to focus on the governing statutory authorization to determine what standards should govern an award of attorneys' fees, we

> should reconsider whether those same interpretative errors have led us astray in our application of the authority granted to district courts under § 284. Just as "the *PRE* standard finds no roots in the text of § 285," [*Octane*, 134 S. Ct. at 1757-58], there is nothing in the text of § 284 that justifies the use of the *PRE* narrow standard. In rejecting the rigid two-prong, subjective/objective test for § 285 under *Brooks Furniture*, the Supreme Court told us to employ a flexible totality of the circumstances test. *Id.* at 1756. We should now assess whether a similar flexible test is appropriate for an award of enhanced damages.

(Pet. App. 28a.) They also urged *en banc* reconsideration of several other issues, including the *de novo* standard of review, the clear and convincing evidence burden of proof, and the submission of part of the inquiry to juries. (Pet. App. 28a-31a.)

But the full court denied rehearing *en banc*. (App. 138a-139a.) Two other judges acknowledged that § 284 "is close to content free in what it says about enhanced damages," (Pet. App. 141a), but thought this case wasn't an appropriate vehicle to reassess the standard. (*Id.* at 140a-145a (Taranto, J., concurring).)

Judges O'Malley and Hughes dissented. (App. 146a-154a.) They reiterated their prior points and noted that their court's test wrongly ignores bad faith behavior if a defendant concocts a non-frivolous defense after being sued by "requir[ing] that an evidentiary wall be erected between the objective and subjective portions of the inquiry," which "preclude[s] considerations of subjective bad faith—no matter how egregious—from informing our inquiry," of the "objective" prong. (Pet. App. 148a.)

SUMMARY OF THE ARGUMENT

1. Section 284's text is plain and broad. It says that "the court may increase the damages up to three times the amount found or assessed," and contains no limitations. The text is "inherently flexible"—just as *Octane* described similar text in § 285—and gives courts the freedom to consider all relevant circumstances in determining whether (and by how much) to enhance damages. Consistent with the broad statutory text, this Court has long approved enhancement "whenever the circumstances require it," including instances of bad faith infringement or where the infringer imposes unnecessary expense and burden on the patent holder. This Court has also said that enhancement can be appropriate even if the patent's validity "is by no means free from doubt," if other aggravating circumstances support it.

2. The Federal Circuit departed from the statutory text and historical application of § 284 in a series of decisions culminating in *In re Seagate Technology LLC*, 497 F.3d 1360 (Fed. Cir. 2007) (en banc). It first limited enhancement to cases of only willful infringement, even though § 284's text includes no such requirement and that limitation contradicts this Court's precedent permitting enhancement for other types of culpable conduct. Then, in *Seagate*, the court imposed a rigid, two-part test for willfulness that was still further from the statutory text, its historical application, and its purpose. The Federal Circuit's test bypasses the historic totality of the circumstances approach from this Court and allows a defendant—even the most malicious infringer—to escape enhancement by developing a non-sham defense at any time. It is also the same as the test rejected last term in *Octane* for the similarly-worded § 285.

3. The Federal Circuit's § 284 framework should be set aside and replaced with the flexible enhancement inquiry mandated by the statutory text, and followed by courts before the Federal Circuit added its atextual limits. District courts should be allowed to consider and balance all relevant facts, such as the defendant's copying, whether (and how much) the defendant investigated a charge of infringement, whether the defendant took steps to avoid infringement or seek a license, and any other commercial considerations that may be relevant in a particular case. No factor should be automatically dispositive, and each should be considered in the total context of the case. Enhancement, for example, should be possible even in a close case in which other aggravating conduct justifies enhancing damages to punish, deter, or compensate. Moreover, the preponderance standard should apply, and appellate review should be for abuse of discretion.

4. Because use of the wrong legal framework prevented the courts below from properly considering enhancement, this Court should vacate the judgment and remand for the district court to do so under the flexible text of § 284. The district court here could well have concluded that Pulse's copying, disregard of Halo's attempts to license, consistent expansion of its infringing product line, and other behavior that drove up costs of its much-smaller competitor warranted enhancement. Yet the district court's hands were tied because, under *Seagate*, Pulse's "non-sham" trial defense automatically wiped away a decade of culpable behavior.

ARGUMENT

I. Section 284 Gives District Courts Flexibility to Balance All Relevant Facts When Deciding to Enhance Damages.

A. The Statutory Text Is Plain and Broad.

This case turns on the proper construction of 35 U.S.C. § 284. When construing a statute, the Court "start[s], of course, with the statutory text" and generally interprets statutory terms "in accordance with their ordinary meaning." *Sebelius v. Cloer*, 133 S. Ct. 1886, 1893 (2014). Section 284's text is undeniably plain—it says only that "the court may increase the damages up to three times the amount found or assessed." Nothing in the text calls for a particular approach to assessing enhancement. Nothing restricts enhancement to cases of "willful infringement." And nothing imposes any *per se* rule against enhancing damages in particular situations, such as when a defendant raises a non-sham trial defense. Rather, the text uses the word "may," which "clearly connotes discretion," *Martin v. Frankline Capital Corp.*, 546 U.S. 132 136 (2005), and leaves the proper considerations for "the court" to determine on a case-by-case basis.

The Federal Circuit itself recognized the text's plain and broad meaning when it acknowledged that it was imposing an artifice onto § 284 "absent a statutory guide." *In re Seagate Technology, LLC*, 497 F.3d 1360, 1368 (Fed. Cir. 2007) (*en banc*); *see also Jurgens v. CBK, Ltd.*, 80 F.3d 1566 (Fed. Cir. 1996) ("*Absent statutory instructions*, we have interpreted the increased damages part of section 284 as requiring a two step process."). Some Federal Circuit judges rightly expressed concern about this approach, protesting their court's imposition of a willfulness requirement

where "the language of the statute unambiguously omits any such requirement" and "there is no principled reason for continuing to engraft a willfulness requirement onto section 284." *Seagate*, 497 F.3d at 1377 (Gajarsa, J., concurring).

B. The Application of § 284's Predecessors Provided Flexibility for District Courts.

This case is one in which "a page of history is worth a volume of logic." *New York Trust Co. v. Eisner*, 256 U. S. 345, 349 (1921) (Holmes, J.). The history of § 284 shows that enhanced damages were used to punish many types of culpable conduct, not just willful infringement, and to ensure a plaintiff was fully compensated. It also shows that earlier, similarly-worded versions of § 284 were interpreted with the same flexibility that the current text provides.

The first patent statute (of 1790) provided only for actual damages, without any possibility of enhancement. In the Patent Acts of 1793 and 1800, Congress made trebling mandatory in all patent cases:

- Patent Act of 1793, Ch 11, § 5 (patentee entitled to damages that are "at least equal to three times the price, for which the patentee has usually sold or licensed to other persons, the use of [the invention]...");
- Patent Act of 1800, Ch. 25, § 3 (patentee entitled to "a sum equal to three times the actual damages sustained by patentee.").

Mandatory trebling proved too draconian, however, because it hit all defendants equally, even those who may not have been culpable. Congress thus amended the statute in 1836 to give "the court" the discretion (but not the obligation) to increase damages

in an appropriate case up to three times the amount awarded by the jury:

> [I]t shall be in the power of the court to render judgment for any sum above the amount found by such verdict . not exceeding three times the amount thereof, according to the circumstances of the case.

Patent Act of 1836, ch. 357, 5 Stat. 117 (1836). As this Court explained with respect to that change, "experience has shown the very great injustice of a horizontal rule equally affecting all cases, without regard to the merits." *Seymour v. McCormick*, 57 U.S. 480, 488 (1854). "The defendant who acted in ignorance or good faith, claiming under a junior patent, was made liable [under the 1793 and 1800 Acts] to the same penalty with the wanton and malicious pirate." *Id.* "It was to obviate this that the Patent Act of 1836 confined the jury to the assessment of actual damages, leaving it to the discretion of the court to inflict punitive damages to the extent of trebling the verdict." *Root v. Railway Co.*, 105 U.S. 189, 196 (1882). The 1836 Act thus "restore[d] the flexibility of remedy that is the traditional judicial province." *Seagate*, 497 F.3d at 1378 (Gajarsa, J., concurring).

Congress carried this discretionary language into subsequent statutory revisions in the 1870 and 1946 Acts. The 1870 Act, in relevant part, stated, "the court may enter judgment thereon for any sum above the amount found by the verdict as the actual damages sustained, according to the circumstances of the case, not exceeding three times the amount of such verdict, together with the costs." Patent Act of 1870, ch. 230, § 59, 16 Stat. 198, 207 (1870). The 1946 Act had nearly identical language. *See* 35 U.S.C. § 67 (1946 ed.). In the 1952 Act, the language was simplified into

its current form. The changes to § 284 simply "consolidated" the damages provisions for law and equity from the prior statutes, and were "merely 'reorganization in language to clarify the statement of the statutes,'" not an attempt to substantively change anything. *General Motors*, 461 U.S. at 652 (quoting H.R. Rep. No. 1923, 82d Cong., 2d Sess., at 10, 29 (1952)).

This Court consistently interpreted § 284's predecessors to give district courts wide latitude to enhance damages whenever the relevant facts required it. For example, in *Seymour v. McCormick*, the Court noted that district courts were to apply sound "discretion and judgment," as permitted by the plain statutory language:

> The power to inflict vindictive or punitive damages is committed *to the discretion and judgment of the court* within the limit of trebling the actual damages found by the jury.

57 U.S. 480, 488-89 (1853) (emphasis added). Other precedent reiterated this flexible view of the statute. *See Tilghman v. Proctor*, 125 U.S. 136, 143-44 (1888) ("[T]he court may, *whenever the circumstances of the case appear to require it*, inflict vindictive or punitive damages, by rendering judgment for not more than thrice the amount of the verdict.").

Precedent also permitted enhancement for bad faith infringement *or* other circumstances in which the defendant "caused unnecessary expense and injury" to the plaintiff. *Teese v. Huntingdon*, 64 U.S. 2, 9 (1860); *see also Day v. Woodworth*, 54 U.S. 363, 372 (1851). The upshot was that enhancement could be appropriately punitive, compensatory, or both, depending on the facts of the case.

C. The Lower Courts Also Recognized § 284's Broad Language and Applied a Flexible Standard Before *Seagate*.

Following the plain text and historical practice underlying § 284, the lower courts, in large part, analyzed enhancement in the flexible manner required by its text. There was some difference of opinion on whether enhancement should be a single inquiry, or should instead be a two-step inquiry, in which there must first be an initial showing of "willfulness" or other culpability, followed by a subsequent consideration of whether to enhance.‡ Nevertheless, courts generally applied a flexible approach in which they looked at all the relevant facts.

The Federal Circuit in *Read Corp. v. Portec, Inc.*, compiled a list of the common factors considered by courts in enhancing damages under § 284:

- Whether the infringer deliberately copied;
- Whether the infringer, when he knew of the other's patent protection, investigated the scope of the patent and formed a good-faith belief that it was invalid or that it was not infringed;

---

‡ *Compare, e.g., Lam, Inc. v. Johns-Manville Corp.*, 668 F.2d 462, 474 (10th Cir. 1982), *and Union Carbide Corp. v. Graver Tank & Mfg. Co.*, 282 F.2d 653, 675 (7th Cir. 1960) (enhancement limited to cases of willfulness), *with Am. Safety Table Co. v. Schreiber*, 415 F.2d 373, 379 (2d Cir. 1969) (enhancing based on the totality of the circumstances for infringement "with deliberation and abandon" but not "with the ultimate willfulness"), *and Trio Process Corp. v. L. Goldstein's Sons, Inc.*, 638 F.2d 661, 662-63 (3d Cir. 1981) (declining to limit enhancement to willfulness).

- The infringer's behavior as a party to the litigation;
- Defendant's size and financial condition;
- Closeness of the case;
- Duration of the defendant's misconduct;
- Remedial action, if any, taken by the defendant;
- Defendant's motivation for the harm; and
- Whether defendant attempted to conceal its misconduct.

970 F.2d 816, 827-28 (Fed. Cir. 1992) (citing prior cases discussing each factor). *Read* directed district courts to balance these considerations with § 284's flexibility in mind, explaining that the enhancement determination should be "based on all the facts and circumstances" and that courts "must consider factors that render defendant's conduct more culpable, as well as factors that are mitigating or ameliorating." *Id.* at 826.

These factors captured both this Court's concern that enhancement should be tied with some level of culpability, and the flexibility of § 284's text. Taken together, the factors permit a judge to consider all the facts about a particular defendant's conduct and determine how much (if any) enhancement is needed to compensate the plaintiff for any unrecovered costs, to punish the defendant for misconduct, and to deter others from similar bad behavior. In this way, they serve the statutory purpose, which was to "discourage infringement of a patent by anyone thinking that all he would be required to pay if he loses the suit would be a royalty." S. Rep. No. 79-1503, at 2 (1946).

D. *Octane* and *General Motors* Require Enforcing § 284 as Written.

This Court has already recognized that open and flexible statutory text like that here should not be narrowed by judicial fiat.

The prime example, decided just last term, is *Octane Fitness, LLC v. Icon Health & Fitness, Inc.*, 134 S. Ct. 1749 (2014). There, this Court interpreted the attorney fee provision of 35 U.S.C. § 285, and observed that "our analysis begins and ends with the text of § 285," which was "patently clear" and imposed "one and only one constraint on district courts' discretion to award attorney's fees in patent litigation: The power is reserved for exceptional cases." *Id.* at 1755-56. After observing that "exceptional" simply means a case that "stands out from others," this Court eliminated the Federal Circuit's rigid, two-prong test and freed district courts to consider and balance all relevant facts.

The same analysis applies here. The text of § 284 is even broader than that of § 285 because it does not restrict enhancement to "exceptional cases." History teaches that enhancement should be reserved for culpable conduct, analyzed using the traditional factors collected by *Read* and other cases. No basis exists for a rigid, multi-prong test that makes any one fact dispositive or requires the district court to close its eyes to egregious behavior like copying or purposely ignoring a patentee's attempts to license. And nothing in the statute requires a district court to ignore almost a decade of bad pre-suit conduct simply because the defendant develops a non-frivolous defense after it is sued. The statutory text and historical practice allow the district court to consider and weigh every fact.

Another example, which addressed part of § 284, is *General Motors Corp. v. Devex Corp.*, 461 U.S. 648 (1983). That provision, which is also plain and broad, says that "the court shall award ... interest." This Court refused to constrain a district court's ability to award interest, because "on the face of § 284, a court's authority to award interest is not restricted to exceptional circumstances," and "when Congress wished to limit an element of recovery in a patent infringement action, it said so explicitly." *Id.* at 653. The Court contrasted the interest provision with the attorney fee provision, noting that the latter was restricted to "exceptional cases," while "the power to award interest was not similarly restricted." *Id.*

The same is true here. Section 284 does not impose any limitations on enhancement of damages, so district courts have discretion to analyze the issue consistent with this Court's historical practice and to look to all factors that may indicate that the defendant has the necessary culpability. If Congress wanted to further constrain that discretion, it would have said so explicitly. No statutory basis exists to treat enhanced damages more restrictively than attorney fees, given that the statute itself imposes greater constraints on fee awards. Therefore, given *Octane*'s holding that a rigid two-prong test cannot stand in the attorney fee context, it certainly cannot stand in the broader and more flexible enhanced damages context.

II. The Federal Circuit Has No Support for Its Application of § 284.

The Federal Circuit's current approach to enhanced damages has diverged from the statutory text and this Court's precedent in five ways. First, that court has required that willfulness be found as a pre-

requisite to considering any other enhancement considerations. Second, *Seagate* imposed a rigid two-part test that required a patentee to prove the defendant's position was objectively reckless before it would even consider the defendant's actual behavior. Third, in this case, the court held that the objective recklessness could be measured, not against the facts that faced the defendant when it infringed, but with an any-defense-at-any-time approach, that allows even the most egregious infringer to escape punishment if it can develop a non-sham defense at trial. Fourth, it imposed a clear and convincing burden of proof. Fifth, the court has applied *de novo* review inconsistent with the discretionary nature of the flexible district court-level enhancement determination. The Federal Circuit has thus layered scar on top of scar, and spun a straightforward statute into an artifice unsupported by the § 284 text or this Court's precedent.

A. There Is No Support for Requiring Willful Infringement to Enhance Damages.

The Federal Circuit made willfulness a necessary prerequisite to enhancement in *Jurgens v. CBK, Ltd.*, 80 F.3d 1566, 1570 (Fed. Cir. 1996) and again in *Seagate*. Setting willfulness as a necessary predicate over every other possible consideration conflicts with this Court's precedent. For example, in *Teese v. Huntingdon*, 64 U.S. 2, 9 (1860), the Court noted that, "if, in the opinion of the court, the defendant *has not acted in good faith, or has caused unnecessary expense and injury to the plaintiff*, the court may render judgment for a larger sum, not exceeding three times the amount of the verdict." And in *Day v. Woodworth*, 54 U.S. 363, 372 (1851), the Court again focused on bad faith or other culpable activity: "If, in the opinion of the court, the defendant has *not acted in good faith, or*

has been stubbornly litigious, or has caused unnecessary expense and trouble to the plaintiff, the court may increase the amount of the verdict, to the extent of trebling it."

Contrary to the Federal Circuit's view in *Seagate*, this Court's post-1952 decision in *Aro Mfg. Co. v. Convertible Top Replacement Co.*, 377 U.S. 476, did not narrow § 284 to permit enhancement for only "willful infringement." The Court listed a number of remedies available to a patentee, including that "it could in a case of willful or bad-faith infringement recover punitive or 'increased' damages under the statute's trebling purpose." *Id.* at 508. *Aro* thus simply reiterated that willfulness is one basis to enhance damages—it did not change the law and make willfulness the only basis for enhancement. *Seagate*, 497 F.3d at 1381 (Gajarsa, J., concurring) (explaining that this Court's post-1952 cases "do not hold that a finding of willfulness is *necessary* to support an award of enhanced damages," but, at most, "stand for the uncontroversial proposition that a finding of willfulness is *sufficient* to support an award of enhanced damages"). Therefore, willfulness is one factor—perhaps an important factor—for the court to consider along with any other factors that may be relevant in a particular case.

B. The Federal Circuit's Two-Part "Willfulness" Test Conflicts with the Statute.

The Federal Circuit further compounded its error in *Seagate* by departing from traditional patent precedent on the level of culpability required for enhancement. *Seagate* arose as an attempt to fix years or problems that had plagued the Federal Circuit's earlier willfulness jurisprudence. The trouble began after the Federal Circuit imposed an affirmative duty on a defendant who had learned of a patent to get an

exonerating opinion of counsel, and then forced them to either waive privilege over that opinion or face an adverse inference that it was negative. *See, e.g., Underwater Devices, Inc. v. Morrison-Knudsen Co.*, 717 F.2d 1380, 1389-90 (Fed. Cir. 1983); *Kloster Speedsteel AB v. Crucible, Inc.*, 793 F.2d 1565, 1580 (Fed. Cir. 1986). The Federal Circuit partially corrected this problem by eliminating the adverse inference in *Knorr-Bremse Sys. v. Dana Corp.*, 383 F.3d 1337 (Fed. Cir. 2004) (*en banc*). But this still left lingering questions about the scope of the privilege waiver for defendants who nevertheless wanted to rely upon an opinion of counsel.

Seagate dealt with one such question—whether a defendant's waiver of privilege over a pre-suit opinion of counsel also extended to its later communications with trial counsel on the same issue. *Seagate*, 497 F.3d at 1366-67. The *Seagate* majority dealt with this, in part, by restricting "willful infringement" to only "objectively reckless" behavior, and therefore held that "a patentee must show by clear and convincing evidence that the infringer acted despite an objectively high likelihood that its actions constituted infringement of a valid patent." *Id.* at 1371. The majority stressed that "the state of mind of the accused infringer is not relevant to this objective inquiry," and thereby created a way for defendants to negate willfulness without discussing their own actions or thoughts, or whether they obtained a pre-suit opinion. *Id.* The Court further added a second prong to the willfulness test—"the patentee must also demonstrate that this objectively-defined risk (determined by the record developed in the infringement proceeding) was either known or so obvious that it should have been known to the accused infringer." *Id.*

Seagate attempted to justify its new rigid test not with the text of § 284 or this Court's precedent that addressed the predecessor provisions, but rather with a citation to *Safeco Insurance Co. of Am. v. Burr*, 551 U.S. 47 (2007), a case that interpreted the statutory language of the Fair Credit Reporting Act that imposed liability against anyone who "willfully fails to comply" with the Act. *See* 15 U.S.C. § 1681n(a). *Safeco* addressed whether this language extended "only to acts known to violate the Act" or also included "reckless disregard of a statutory duty." *Safeco*, 551 U.S. at 56-57. After acknowledging that "willfully is a word of many meanings whose construction is often dependent on the context in which it appears," *id.* at 57, the Court held that, for that particular statute, the provision included both knowing and reckless statutory violations, and then enunciated a test for recklessness. *Id.* at 57-60, 68-71. *Seagate* wrongly imported that objective recklessness test into patent law as the sole prerequisite to enhancing damages, even though *Safeco* itself plainly held that both knowing *and* reckless violations were "willful." *Id.* at 57-60. And it did so based on a word—willful—that does not appear in § 284.

Seagate thus repeated the same error that this Court corrected last term in *Octane*. There, the Federal Circuit had improperly imported a comparable two-prong test involving the *Noerr-Pennington* exception for antitrust liability into the patent statute dealing with attorney fees. *Octane*, 134 S. Ct. at 1756-58. This Court rejected that approach because the antitrust standard "finds no roots in the text of § 285, and it makes little sense in the context" of patent law. *Id.* at 1757. Here, the Federal Circuit has imported a test for the Fair Credit Reporting Act into another flexible patent statute. Indeed, the Federal Circuit has

equated the two-prong test for enhancement with its two-prong test for attorney fees. *See iLOR, LLC v. Google, Inc.*, 631 F.3d 1372, 1377 (Fed. Cir. 2011). And, as with § 285, the two-prong test "finds no roots" in the text of § 284, and it "makes little sense" given the purpose and historical application of § 284.

C. There Is No Basis for the Federal Circuit's "Any-Defense-at-Any-Time" Approach.

Seagate's progeny have further compounded the Federal Circuit's error by looking not to the facts that faced a defendant when it infringed, but to later-developed defenses. Those subsequent decisions have held that a defendant does not meet the "objective" part of the *Seagate* test if the defendant presents any non-sham trial defense, even one developed only after years of bad behavior that forces a patentee to file a lawsuit. *See, e.g., Spine Solutions, Inc. v. Medtronic Sofamor Danek USA, Inc.*, 620 F.3d 1305, 1319 (Fed. Cir. 2010); *Halo*, 769 F.3d at 1382-83; *Global Traffic Techs., LLC v. Morgan*, 2015 WL 3513416, at *7-8 (Fed. Cir. June 4, 2015); *Carneige Mellon Univ. v. Marvell Tech. Gp.*, 2015 WL 4639309, at *12 (Fed. Cir. Aug. 4, 2015). These cases require district courts to ignore the defendant's real-world acts (e.g., copying), because they treat it as relevant only to *Seagate*'s "subjective" prong.

This is a dramatic departure from this Court's precedent. No legal basis exists to let a willful infringer off the hook solely because it raised a reasonable, but unsuccessful defense at trial. In fact, this Court previously remarked that it would "not have disturbed the decree of the court below, if it had seen fit to increase the damages," in a complicated case that involved the validity of a reissue patent, even

though "the patentable novelty in [the patented] device is *by no means free from doubt*." *Topliff v. Topliff*, 145 U.S. 146,164, 174 (1892). That contradicts any *per se* rule against enhancement even in close cases. Instead, it shows that if a defendant acts culpably for some period of time, the district court has discretion to consider if, and by how much, to enhance damages no matter what defenses were ultimately raised at trial.

Seagate and its progeny are also a dramatic departure from the Federal Circuit's prior approach. Indeed, just a few years earlier, the *en banc* Federal Circuit had repudiated any *per se* rule, stressing that a "determination of willfulness is made on consideration of the totality of the circumstances," *Knorr-Bremse*, 383 F.3d at 1343, and declining to make the existence of a defense to infringement a fact that could always defeat willfulness. *Id.* at 1347 On the latter point, the court wisely explained that, although the existence of a defense should "be considered among the totality of the circumstances," it was inappropriate to abstract it "for *per se* treatment, for this greater flexibility enables the trier of fact to fit the decision to all of the circumstances." *Id.* This more flexible view was also consistent with *Read*, which identified "closeness of the case" as one factor relevant to enhancement, but left open the possibility that other factors (e.g., copying and failure to design around) could justify enhancement in an appropriate case. *Seagate* and its progeny abruptly abandoned this approach.

D. The Federal Circuit's Standards of Proof and Appellate Review Are Unsupported.

Judge O'Malley astutely flagged two other parts of the Federal Circuit's current approach that diverge from the statute. (Pet. App. 28a-29a.)

For starters, the Federal Circuit applies the clear and convincing evidence standard for proving willfulness. (Pet. App. 28a-29a.) Yet Section 284 itself imposes no heightened burden, and, as in *Octane*, provides no basis to depart from the typical burden in civil cases. *Octane*, 134 S. Ct. at 1758 ("[W]e reject the Federal Circuit's requirement that patent litigants establish their entitlement to fees under § 285 by clear and convincing evidence.").

Moreover, the Federal Circuit reviews the "objective recklessness" prong of *Seagate de novo*. *See Bard Peripheral Vascular, Inc. v. W.L. Gore & Associates, Inc.*, 682 F.3d 1003, 1007 (Fed. Cir. 2012). The court reasoned that it should follow the approach from *Brooks Furniture Manufacturing, Inc. v. Dutailier International, Inc.*, 393 F.3d 1378 (Fed. Cir. 2005), which, in turn, borrowed from *Professional Real Estate Investors, Inc. v. Columbia Pictures Industries, Inc.*, 508 U.S. 49 (1993). But this Court wholly undercut the connection between *PRE* and *Brooks Furniture* in *Highmark, Inc. v. Allcare Health Management Sys., Inc.*, 134 S. Ct. 1744 (2014), making clear that the rationale underlying *PRE* had no application to the very different situation involved in *Brooks Furniture* and thus to the award of attorney fees in patent law. Likewise, *PRE* has no application to the enhancement determination of § 284, which is virtually identical to the attorney fees determination of § 285. In particular, the text of § 284 (just like § 285) uses the word "may" to connote discretion, which makes sense, because the district court "is better positioned" to decide enhancement "because it lives with the case over a prolonged period of time." *Highmark*, 134 S. Ct. at 1748.

III. This Court Should Restore Enhanced Patent Damages Law to the Flexible Inquiry Required by § 284.

The proper approach to determining whether, and by how much, to enhance damages under § 284 should be a simple, flexible one that is consistent with the statutory text. The *Read* factors provide a starting point to guide district courts. Some may be more important that others, especially in a particular case. For example, considerations relevant to the defendant's culpability—*e.g.*, copying, failing to investigate a known patent or to take steps to avoid infringement, and any actions the defendant took that inflicted further expense on the plaintiff—can be given more weight than other factors. Context is also important when assessing the factors. A defendant that learns of a patent in the course of copying a competitor's product or through letters from the patent owner is plainly more culpable than one who stumbles upon the patent in a stack of dozens without any knowledge that it might infringe.

District judges are well-positioned to apply and balance all relevant factors. After all, culpable conduct often falls along a continuous spectrum, rather than at one extreme end or the other. Some aspects of the inquiry are binary (did the defendant copy or not?), but others are more fluid (was the defendant's investigation non-existent, cursory, average, or thorough?). Similarly, a party's level of culpability may change over time as it receives more information (such as new legal advice) or as it changes its products to be more or less like the patent. Some factors may have a different level of importance depending on the totality of the defendant's conduct. Although enhancement

may not be warranted for a close case where the defendant was mildly culpable, it may well be warranted where the case was close but should never have been necessary because the defendant copied, ignored the plaintiff's licensing attempts, or otherwise acted unreasonably. The problem with the Federal Circuit's current approach is that it makes one factor—closeness of the case—dispositive, even in situations in which all the other facts show that enhancement is needed to punish, deter, and compensate.

The Federal Circuit has created a situation in which patent holders will almost never receive enhanced damages. Every defendant, no matter how culpable, can concoct a non-sham argument that the patent is invalid, even if they are the most "malicious pirate" this Court called out in *Seymour*. 57 U.S. at 488. The Federal Circuit has blocked enhancement in seven cases involving bad faith conduct in little over a year, including the two consolidated cases here. *See, e.g.*, *Carnegie Mellon*, 2015 WL 4639309, at *12; *WesternGeco L.L.C. v. Ion Geophysical Corp.*, 791 F.3d 1340, 1354 (Fed. Cir. 2015); *Global Traffic*, 2015 WL 3573416, at *7-8 (Fed. Cir. Jun. 4, 2015); *Innovention Toys, LLC v. MGA Entm't, Inc.*, 611 F. App'x 693, 701 (Fed. Cir. 2015); *Univ. of Pittsburgh of the Commonwealth Sys. of Higher Educ. v. Varian Med. Sys.*, 561 Fed. Appx. 934, 945 (Fed. Cir. 2014). We are thus back to the "very great injustice of a horizontal rule equally affecting all cases, without regard to the merits," *Seymour*, 57 U.S. at 488, because copyists owe no more than unwitting infringers.

Returning the enhancement inquiry to the statutory text will not open a Pandora's box of runaway trebling. Experienced district judges will be analyzing enhancement, subject to abuse of discretion review on

appeal. This Court's precedent, and other appropriate guidance, like that provided in *Read*, can identify the factors that are typically relevant and the proportionate importance of each such factor in a particular case.

The bottom line is that Congress entrusted the decision to enhance to the sound discretion of district courts 180 years ago. The flexible statutory text has never materially changed. And there was no history of problems with over-zealous judges improperly enhancing. Instead, the Federal Circuit crafted an atextual analysis in *Seagate* to resolve a privilege dispute. It is time to restore district courts' authority to apply that statute flexibly to serve its appropriate purpose.

IV. This Court Should Vacate the Judgment and Remand So the District Court Can Apply the Correct Legal Standard.

The district court here should have the opportunity to consider enhancement under the correct legal standard based on all the relevant facts. The evidence showed an ample basis to conclude that Pulse engaged in culpable conduct that warrants an enhancement of the damages awarded to Halo.

For example, Pulse copied Halo's invention after seeing Halo's patents, after failing for years to solve the cracking problem on its own, and despite previously criticizing aspects of the very design it copied. Pulse then expanded its infringement for nearly a decade while ignoring Halo's attempts to license the patents. Its only excuse was an admittedly "cursory" analysis by a non-lawyer who knew nothing about the relevant legal principles, could not produce any written evidence of the analysis, and relied on prior art that his colleague said at trial was "irrelevant" to

Halo's invention. In fact, Pulse's corporate representative admitted that no one in the company made a conscious decision that Pulse could properly sell its infringing product.

Pulse's conduct only worsened after it was sued in 2007. It shifted "all" its new surface mount transformers to Halo's design, and litigated this case to the bitter end, even after the Patent Office rejected its obviousness arguments in a reexamination, and even after a jury rejected materially similar obviousness arguments at trial. Pulse's conduct stood in stark contrast to its competitors, four of which licensed the Halo patents. Through it all, Pulse used its much-greater resources to take advantage of a small competitor, betting on the fact that Halo would not be able to defend its rights.

The district court could certainly have found that those facts provide a sufficient basis to enhance damages. Instead, the Federal Circuit's *Seagate* test required the court to ignore Pulse's years of malfeasance only because its lawyers concocted a "non-sham" obviousness defense for trial. The court could certainly have considered that defense as one factor among the others. But the court should have had the opportunity to consider all the facts together. *Seagate* denied it that opportunity.

CONCLUSION

For the reasons above, this Court should vacate the judgment and remand so the district court can entertain a motion for enhanced damages under the correct legal standard.

Respectfully submitted,

CRAIG E. COUNTRYMAN
Counsel of Record
Fish & Richardson P.C.
12390 El Camino Real
San Diego, CA 92130
(858) 678-5070
countryman@fr.com

MICHAEL J. KANE
WILLIAM R. WOODFORD
JOHN A. DRAGSETH
Fish & Richardson P.C.
3200 RBC Plaza
60 South Sixth Street
Minneapolis, MN 55402
(612) 335-5070

Counsel for Petitioner
Halo Electronics, Inc.

December 9, 2015

Supreme Court, U.S.
FILED
JAN 13 2016
OFFICE OF THE CLERK

No. 14-1513

IN THE

Supreme Court of the United States

HALO ELECTRONICS, INC.,

Petitioner,

v.

PULSE ELECTRONICS, INC. AND
PULSE ELECTRONICS CORPORATION,

Respondents.

On Writ of Certiorari to the United States Court of Appeals for the Federal Circuit

BRIEF OF RESPONDENTS

CARTER G. PHILLIPS
SIDLEY AUSTIN LLP
1501 K Street, N.W.
Washington, D.C. 20005
(202) 736-8000

CONSTANTINE L. TRELA, JR.
STEVEN J. HOROWITZ
SIDLEY AUSTIN LLP
One South Dearborn
Chicago, IL 60603
(312) 853-7000

MARK L. HOGGE*
VICTOR H. BOYAJIAN
SHAILENDRA K. MAHESHWARI
CHARLES R. BRUTON
RAJESH C. NORONHA
DENTONS US LLP
1900 K Street, N.W.
Washington, DC 20006
(202) 496-7500
mark.hogge@dentons.com

Counsel for Respondents

January 13, 2016

* Counsel of Record

WILSON-EPES PRINTING CO., INC. – (202) 789-0096 – WASHINGTON, D. C. 20002

QUESTION PRESENTED

Section 284 of the Patent Act provides that a court presiding over an action for patent infringement may increase the damages awarded to a successful patent holder up to three times the compensatory damages assessed. It has been settled for more than 150 years that this authority to increase damages may be exercised only where the infringer acted in a willful manner warranting punishment. The question presented in this case is:

Whether a defendant may be held to have engaged in willful infringement required for the assessment of punitive damages under section 284, where that defendant, on first learning of the patents, analyzed them and concluded that they were invalid and, after being accused of infringement in litigation, presented an invalidity defense that, although ultimately unsuccessful, was nonetheless substantial and objectively reasonable.

RULES 14.1(b) AND 29.6 STATEMENT

All parties are identified in the caption of this opposition brief.

Pulse Electronics, Inc. operates as a subsidiary of Pulse Electronics Corporation. Pulse Electronics Corporation is a direct, wholly owned subsidiary of OCM PE Holdings, L.P., a wholly owned indirect subsidiary of Oaktree Capital Group LLC (NYSE:OAK).

TABLE OF CONTENTS

	Page
QUESTION PRESENTED	i
RULES 14.1(b) AND 29.6 STATEMENT	ii
TABLE OF AUTHORITIES	v
OPINIONS BELOW	1
JURISDICTION	1
STATUTORY PROVISION INVOLVED	1
INTRODUCTION	2
STATEMENT	4
SUMMARY OF THE ARGUMENT	10
ARGUMENT	12
I. INCREASED DAMAGES CAN BE AWARDED UNDER SECTION 284 ONLY IF THE DISTRICT COURT DETERMINES THAT THERE HAS BEEN WILLFUL PATENT INFRINGEMENT	12
A. When Congress Enacted Section 284, It Did So Against The Backdrop Of A Long-Established Willfulness Requirement	13
B. Since 1952, Congress And The Courts Have Left Untouched And Reaffirmed The Willfulness Requirement This Court Has Imposed For Increased Damages	19
C. The Willfulness Requirement Reflects Common Law And Due Process Requirements For Punitive Damages	25

TABLE OF CONTENTS—continued

Page

II. *SEAGATE'S* TEST FOR INCREASED DAMAGES, AS APPLIED IN THIS CASE, APPROPRIATELY IMPLEMENTS THE WILLFULNESS REQUIREMENT 33

A. *Seagate* Implements The Willfulness Requirement By Applying An Established Recklessness Standard 33

B. Halo Cannot Establish Willful Infringement Under Any Appropriate Test 39

III. A STANDARD THAT LIMITS ENHANCEMENT TO KNOWING OR OBJECTIVELY OBVIOUS VIOLATIONS ADVANCES THE OVERARCHING POLICIES OF THE PATENT ACT 42

A. A Too-Lenient Standard For Increased Damages Will Chill, Not Promote, Innovation 43

B. A Too-Lenient Standard For Increased Damages Will Foster The Abusive Use Of Patents And Reintroduce Wasteful Practices Prevalent Before *Seagate* 48

IV. NEITHER A WILLFUL INFRINGEMENT REQUIREMENT IN GENERAL, NOR THE SPECIFIC STANDARD APPLIED BY THE FEDERAL CIRCUIT, IS INCONSISTENT WITH THE COURT'S DECISIONS IN *OCTANE* AND *HIGHMARK* 50

CONCLUSION 54

TABLE OF AUTHORITIES

CASES Page

Addington v. Texas, 441 U.S. 418 (1979) 41, 42
Amfac, Inc. v. Waikiki Beachcomber Inv. Co., 839 P.2d 10 (Haw. 1992) 41
Aro Mfg. Co. v. Convertible Top Replacement Co., 377 U.S. 476 (1964) 19
B.F. Goodrich Co. v. Consol. Rubber Tire Co., 251 F. 617 (7th Cir. 1918) 17
Baumstimler v. Rankin, 677 F.2d 1061 (5th Cir. 1982) 20
Bell v. McCullough, 3 F. Cas. 108 (C.C.S.D. Ohio 1858) (No. 1,256) 16
Blonder-Tongue Labs., Inc. v. Univ. of Ill. Found., 402 U.S. 313 (1971) 49
Bonito Boats, Inc. v. Thunder Craft Boats, Inc., 489 U.S. 141 (1989) 44
Brodie v. Ophir Silver Mining Co., 4 F. Cas. 202 (C.C.D. Cal. 1867) (No. 1,919) 16
Brooks Furniture Mfg., Inc. v. Dutailier Int'l, Inc., 393 F.3d 1379 (Fed. Cir. 2005), *abrogated by Octane Fitness, LLC v. ICON Health & Fitness, Inc.*, 134 S. Ct. 1749 (2014) 50
Buerk v. Imhaeuser, 4 F. Cas. 594 (C.C.S.D.N.Y. 1876) (No. 2,107) 16
Cabe v. Lunich, 640 N.E.2d 159 (Ohio 1994) 41
Carr v. Rice, 5 F. Cas. 140 (C.C.S.D.N.Y. 1856) (No. 2,440) 15, 38
Commil USA, LLC v. Cisco Sys., Inc., 135 S. Ct. 1920 (2015) ..... *passim*
Cooper Indus., Inc. v. Leatherman Tool Grp., Inc., 532 U.S. 424 (2001) 28
Corning v. Burden, 56 U.S. (15 How.) 252 (1854) 15

TABLE OF AUTHORITIES—continued

Page

Dean v. Mason, 61 U.S. (20 How.) 198 (1858) 14, 29
Dowling v. United States, 473 U.S. 207 (1985) 19
eBay Inc. v. MercExchange, L.L.C., 547 U.S. 388 (2006) 53
Egry Register Co. v. Standard Register Co., 23 F.2d 438 (6th Cir. 1928) 17
Eltra Corp. v. Basic Inc., 599 F.2d 745 (6th Cir. 1979) 20
Enter. Mfg. Co. v. Shakespeare Co., 141 F.2d 916 (6th Cir. 1944) 39
Exxon Shipping Co. v. Baker, 554 U.S. 471 (2008) 26, 29, 31, 48
Farmer v. Brennan, 511 U.S. 825 (1994) 35
Festo Corp. v. Shoketsu Kinzoku Kogyo Kabushiki Co., 535 U.S. 722 (2002) 44
Fla. Prepaid Postsecondary Educ. Expense Bd. v. Coll. Sav. Bank, 527 U.S. 627 (1999) 21
Ford v. Kurtz, 12 F. 789 (C.C.N.D. Ill. 1882) 16
Gen. Motors Corp. v. Devex Corp., 461 U.S. 648 (1983) 27
Graham v. John Deere Co. of Kan. City, 383 U.S. 1 (1966) 6
Guyon v. Serrell, 1 Blatchf. 244 (C.C.S.D.N.Y. 1847) 15, 17, 39
Highmark, Inc. v. Allcare Health Mgmt. Sys., Inc., 134 S. Ct. 1744 (2014) 9
Hobart Corp. v. Scoggins, 776 So. 2d 56 (Ala. 2000) 41
Hodges v. S.C. Toof & Co., 833 S.W.2d 896 (Tenn. 1992) 41

TABLE OF AUTHORITIES—continued

Page

Hogg v. Emerson, 52 U.S. (11 How.) 587 (1850) 16

Jonathan Woodner Co. v. Breeden, 665 A.2d 929 (D.C. 1995), *amended on other grounds by* 681 A.2d 1097 (D.C. 1996) 41

Knorr-Bremse Systeme Fuer Nutzfahrzeuge GmBH v. Dana Corp., 383 F.3d 1337 (Fed. Cir. 2004) 25, 33

KSR Int'l Co. v. Teleflex Inc., 127 S. Ct. 1727 (2007) 53

Lab. Corp. of Am. Holdings v. Metabolite Labs., Inc., 548 U.S. 124 (2006) 45

Landgraf v. USI Film Prods., 511 U.S. 244 (1994) 30

Lear, Inc. v. Adkins, 395 U.S. 653 (1969) 45

Livingston v. Woodworth, 56 U.S. (15 How.) 546 (1854) 16

Mayo Collaborative Servs. v. Prometheus Labs., Inc., 132 S. Ct. 1289 (2012) 44, 47

Medtronic, Inc. v. Mirowski Family Ventures, LLC, 134 S. Ct. 843 (2014) 44, 46

Merchant v. Lewis, 17 F. Cas. 37 (C.C.S.D. Ohio 1857) (No. 9,437) 16

Microsoft Corp. v. i4i Ltd. P'ship, 131 S. Ct. 2238 (2011) 18, 19, 53

Milwaukee & St. Paul Ry. v. Arms, 91 U.S. 489 (1876) 36

Morss v. Union Form Co., 39 F. 468 (C.C.D. Conn. 1889) 16

Nautilus Inc. v. Biosig Instr., Inc., 134 S. Ct. 2120 (2014) 45

Neder v. United States, 527 U.S. 1 (1999) 18

Octane Fitness, LLC v. ICON Health & Fitness, Inc., 134 S. Ct. 1749 (2014) 9, 46, 51, 52

TABLE OF AUTHORITIES—continued

	Page
Owens-Ill., Inc. v. Zenobia, 601 A.2d 633 (Md. 1992)	41
Pac. Mut. Life Ins. Co. v. Haslip, 499 U.S. 1 (1991)	41
Pfaff v. Wells Elecs., Inc., 525 U.S. 55 (1998)	44
Phila., Wilmington & Balt. R.R. v. Quigley, 62 U.S. (21 How.) 202 (1859)	31
Philip v. Nock, 84 U.S. (17 Wall.) 460 (1873)	28
Reeves v. Carlson, 969 P.2d 252 (Kan. 1988)	41
Rockwood v. Gen. Fire Extinguisher Co., 37 F.2d 62 (2d Cir. 1930)	17, 39
Rodriguez v. Suzuki Motor Corp., 936 S.W.2d 104 (Mo. 1996)	41
Root v. Railway, 105 U.S. 189 (1882)	14, 29
Safeco Ins. Co. of Am. v. Burr, 551 U.S. 47 (2007)	*passim*
In re Seagate Tech., LLC, 497 F.3d 1360 (Fed. Cir. 2007)	2, 34, 35, 37
Seymour v. McCormick, 57 U.S. (16 How.) 480 (1854)	14, 15, 29
Smith v. Wade, 461 U.S. 30 (1983)	31
State Farm Mut. Auto. Ins. Co. v. Campbell, 538 U.S. 408 (2003)	26, 28
Steadman v. SEC, 450 U.S. 91 (1981)	40
Story Parchment Co. v. Paterson Parchment Paper Co., 282 U.S. 555 (1931)	28
Thompson v. Better-Bilt Aluminum Prods. Co., 832 P.2d 203 (Ariz. 1992)	41

TABLE OF AUTHORITIES—continued

Page

Tilghman v. Proctor, 125 U.S. 136 (1888), *superseded on other grounds by statute*, Act of August 1, 1946, ch. 726, 60 Stat. 778, *as recognized in Gen. Motors Corp. v. Devex Corp.*, 461 U.S. 648 (1983)... 14, 27, 29

Topliff v. Topliff, 145 U.S. 156 (1892) 17

Trans World Airlines, Inc. v. Thurston, 469 U.S. 111 (1985) 32

Tuttle v. Raymond, 494 A.2d 1353 (Me. 1985) 41

Underwater Devices, Inc. v. Morrison-Knudsen Co., 717 F.2d 1380 (Fed. Cir. 1983), *overruled by In re Seagate Tech., LLC*, 497 F.3d 1360 (Fed. Cir. 2007)..... 25

Union Carbide Corp. v. Graver Tank & Mfg. Co., 282 F.2d 653 (7th Cir. 1960)..... 20

Wangen v. Ford Motor Co., 294 N.W.2d 437 (Wis. 1980)..... 41

Wilden Pump & Eng'g Co. v. Pressed & Welded Prods. Co., 655 F.2d 984 (9th Cir. 1981) 20, 39

STATUTES

Patent Act of 1793, ch. 11, 1 Stat. 318 13

Patent and Plant Variety Protection Remedy Clarification Act, Pub. L. No. 102-560, 106 Stat. 4230 (1992)..... 21

Domestic Publication of Foreign Filed Patent Applications Act of 1999, Pub. L. No. 106-113, 113 Stat. 1501A-561..... 22, 23

Leahy-Smith America Invents Act, Pub. L. No. 112-29, 125 Stat. 284 (2011) 9

15 U.S.C. § 1117(a)..... 34

35 U.S.C. § 67 (1946)..... 30

TABLE OF AUTHORITIES—continued

	Page
35 U.S.C. § 154(d)	22
§ 284	1, 26, 30
§ 284 (2012)	18
§ 298	24, 47
Alaska Stat. § 09.17.020(b)	41
Ark. Code Ann. § 16-55-207	41
Cal. Civil Code § 3294(a)	41
Colo. Rev. Stat. § 13-25-127(2)	41
Fla. Stat. § 768.725	41
Ga. Code Ann. § 51-12-5.1(b)	41
Idaho Code § 6-1604(1)	41
Ind. Code § 34-51-3-2	41
Ky. Rev. Stat. Ann. § 411.184(2)	41
Minn. Stat. § 549.20(1)(a)	41
Miss. Code Ann. § 11-1-65(1)(a)	41
Mont. Code Ann. § 27-1-221(5)	41
Nev. Rev. Stat. § 42.005(1)	41
N.J. Stat. Ann. § 2A:15-5.12(a)	41
N.C. Gen. Stat. § 1D-15(b)	41
N.D. Cent. Code § 32-03.2-11(1)	41
Okla. Stat. tit. 23, § 9.1(B)	41
Or. Rev. Stat. § 31.730(1)	41
S.C. Code Ann. § 15-33-135	41
S.D. Codified Laws § 21-1-4.1	41
Tex. Civ. Prac. & Rem. Code § 41.003	41
Utah Code Ann. § 78-18-1(1)(a)	41

LEGISLATIVE HISTORY

Patent Reform Act of 2009, S. 515, 111th Cong. (2009)	24
H.R. Rep. No. 82-1923 (1952)	18
105-39 (1997)	23
S. Rep. No. 24-338 (1836)	13
82-1979 (1952)	18

TABLE OF AUTHORITIES—continued

Page

S. Rep. No. 102-280 (1992) 21
111-18 (2009) 24
Cong. Rec. S1348 (daily ed. Mar. 8, 2011) 24
S1360 (daily ed. Mar. 8, 2011) 24

SCHOLARY AUTHORITIES

7 *Chisum on Patents* (2015) 46
4 Blackstone, *Commentaries* 42
W. Keeton et al., *Prosser and Keeton on Law of Torts* (5th ed. 1984) 32
Mark A. Lemley & Carl Shapiro, *Patent Holdup and Royalty Stacking*, 85 Tex. L. Rev. 1991 (2007) 46

OTHER AUTHORITY

Restatement (Second) of Torts (1979) 26, 29, 31, 36

OPINIONS BELOW

The district court granted summary judgment of non-infringement with respect to Pulse products made, sold, and offered for sale outside the United States, a decision reported at 810 F. Supp. 2d 1173 (D. Nev. 2011), and reproduced at Pet. App. 67a-136a. The district court granted judgment as a matter of law of no willful infringement, as reported at 2013 WL 2319145 (D. Nev. May 28, 2013), and reproduced at Pet. App. 32a-66a. The court of appeals affirmed both judgments (Pet. App. 1a-31a), as reported at 769 F.3d 1371 (Fed. Cir. 2014), and denied panel rehearing and rehearing en banc (Pet. App. 137a-154a), as reported at 780 F.3d 1357 (Fed. Cir. 2015).

JURISDICTION

The Federal Circuit's panel opinion issued on October 22, 2014, and that court denied timely petitions for panel rehearing and rehearing en banc on March 23, 2015. Petitioner Halo Electronics, Inc. ("Halo") petitioned for certiorari on June 22, 2015, and the Court granted Halo's petition in part on October 19, 2015. This Court has jurisdiction under 28 U.S.C. § 1254(1).

STATUTORY PROVISION INVOLVED

Section 284 of Title 35 provides as follows:

> Upon finding for the claimant the court shall award the claimant damages adequate to compensate for the infringement, but in no event less than a reasonable royalty for the use made of the invention by the infringer, together with interest and costs as fixed by the court.

> When the damages are not found by a jury, the court shall assess them. In either event the court may increase the damages up to three times the amount found or assessed. Increased damages under this paragraph shall not apply to provisional rights under section 154(d).
>
> The court may receive expert testimony as an aid to the determination of damages or of what royalty would be reasonable under the circumstances.

INTRODUCTION

For more than 150 years, United States patent statutes have allowed federal courts to increase the damages awarded for patent infringement up to three times the amount assessed. Throughout that time, this Court and the lower federal courts have understood that such increased damages are punitive in nature and, as such, may be awarded only for culpable conduct warranting punishment, specifically, willful infringement. And over the same period, Congress has made clear that the courts' understanding of the enhancement provision was correct and that willful infringement is a prerequisite to increased infringement damages. Willful infringement, like other willful misconduct, requires at a minimum that the defendant act in the face of an objectively obvious risk that it is violating the patentee's legitimate rights.

In *In re Seagate Technology, LLC*, 497 F.3d 1360 (Fed. Cir. 2007), the en banc Federal Circuit adopted a standard for identifying such willful infringement that is consistent both with the history and purpose of Section 284, and with the broader policies underlying the patent laws—specifically, to provide appropriate incentives for inventors, while

encouraging competitors and the public to innovate up to the very edges of legitimate patent monopolies and to proceed without being hamstrung by illegitimate monopolies. The *Seagate* standard, under which punitive, increased damages may be assessed only where an infringer acted willfully and behaved in a way that cannot be justified by objectively reasonable doubts about a patent's scope or validity, protects patent owners from willful violations of their legitimate rights, but still allows competitors and the public to innovate and challenge patent monopolies without the risk of being punished for doing so.

In this case, Respondent Pulse was confronted with Halo patents that, a Pulse engineer determined, described nothing more than obvious, trivial variants of products that others, including Pulse itself, had previously manufactured and sold. Pulse, which Halo had not accused of infringement, continued to sell its products. Years later, when Halo finally did accuse Pulse of infringement by filing this lawsuit, Pulse established, first, that the vast bulk of its supposedly infringing sales had no connection to this country and thus could not infringe Halo's U.S. patents as a matter of law and, second, that as its engineer had recognized years earlier, all of the elements of Halo's claimed inventions could be found in the prior art. Although the jury ultimately did not accept Pulse's defense that the Halo patents were invalid, it is undisputed here that, as the Federal Circuit held, Pulse raised "a substantial question as to the obviousness of the Halo patents." Pet. App. 21a.

On this record, the district court and Federal Circuit both properly concluded that increased damages were not available. That result was plainly correct under the *Seagate* standard, and Halo does

not argue to the contrary. That result was also correct under any standard that takes into account the punitive nature of increased damages under Section 284 and the corresponding need for a showing of willful misconduct before such damages may be awarded. The judgment should be affirmed.

STATEMENT

Halo sued Pulse in 2007, alleging that Pulse infringed various claims of three related patents by making and selling certain electronic components. The district court entered summary judgment rejecting Halo's infringement claims with respect to the vast majority of the accused Pulse sales, a ruling the Federal Circuit affirmed on appeal. The case went to trial on the relatively few remaining accused sales. The jury found that these Pulse sales infringed the Halo patents and awarded reasonable royalty damages of $1.5 million. The jury and district court rejected Pulse's defense that the Halo patents were invalid as obvious. Although the jury found that it was highly probable that Pulse's infringement was willful, the district court found that Pulse had not engaged in willful infringement because Pulse had reasonably relied on its obviousness defense. The Federal Circuit affirmed these determinations as well.

1. The three patents at issue, all derived from a single application, are directed to surface mount electronic packages containing magnets used as transformers for mounting on printed circuit boards for use in devices such as computers and routers. Pet. App. 4a. Halo makes and sells such components in the United States. Pulse likewise designs and sells surface mount electronic packages, but does so primarily outside the United States, with only a

relatively small part of its sales involving deliveries to customers in this country. *Id.*, 5a.

In 2002, Halo sent Pulse two letters referencing its patents and offering to negotiate for licenses. Halo did not, however, accuse any Pulse products of infringing its patents or provide any analysis or comparison of its patents' claims to any Pulse products. *Id.*, 7a. Upon receiving Halo's letters, Pulse's president instructed a Pulse engineer to review the patents. After doing so, that engineer concluded that the products described in the patents were indistinguishable from products Pulse had sold years earlier.[1] Pulse therefore did not respond to Halo's license offer and continued to sell its surface mount products. *Id.*

2. Five years later, Halo sued Pulse for infringement. This was the first time Halo accused any Pulse product of infringing any of its patents. Pulse promptly asserted defenses and counterclaims, including, among others, that the patents were invalid because they were obvious in light of the prior art, and that the vast majority of the products Halo accused of infringement were not made, used, sold, or offered for sale in the United States and thus could not infringe Halo's patents regardless of their scope or validity. *Id.*

Pulse moved for summary judgment of non-infringement with respect to the products it made,

---

[1] Halo makes much of the fact that the Pulse engineer devoted "only" about two hours to reviewing the patents. *E.g.*, Halo Br. 5. Halo neglects to mention, however, that each of the patents, which are all substantially identical, consists of no more than five pages of text, much of which simply recounts information admittedly already known to those of ordinary skill in the art, and several pages of accompanying drawings.

sold, and offered for sale outside the United States. Halo vigorously opposed that motion, but the district court rejected its arguments and entered judgment as a matter of law for Pulse on those sales, *id.*, 128a-130a, leaving Halo with a much narrower case of dramatically lower value.

That case was tried to a jury, which concluded, as noted above, that Pulse's sales in the United States infringed the Halo patents; Pulse had not proven that those patents were invalid as obvious; and it was highly probable that Pulse's infringement was willful. Pulse challenged those determinations, particularly with respect to invalidity, in post-trial motions. In considering Pulse's arguments as to obviousness, the district court found Pulse had shown that "all of the elements of the asserted claims, save two, were present in the prior art," *id.*, 38a, and that Pulse's expert had testified that "it would have been obvious and logical to combine" those elements to produce Halo's claimed invention, *id.* Pulse also had presented evidence on the *Graham v. John Deere Co. of Kansas City*, 383 U.S. 1 (1966), factors which pointed to a conclusion that Halo's claims would have been obvious. Pet. App. 40a-44a. The district court held, however, that because Pulse had failed to move for a judgment of obviousness at the close of the evidence, the factual findings implicit in the jury's verdict must be accepted as true, *id.*, 36a, and that Pulse's obviousness defense therefore could not be accepted.

The lack of a motion for judgment, however, did not affect the question of willful infringement. As the district court held, its task was to "determine[] the reasonableness of [Pulse's] defenses in light of all of the evidence," and so it was not bound by the jury's implicit findings. *Id.*, 62a n.3. Based on its review of

the evidence, the district court found that Pulse had presented substantial evidence supporting each element of its obviousness defense, had "reasonably relied" on that defense, and "did not act in the face of an objectively high likelihood that [it] was infringing." *Id.*, 64a-65a. The court therefore rejected Halo's contention that Pulse's infringement had been willful. *Id.*, 65a.

3. a. Halo appealed, challenging the district court's ruling that most of Pulse's sales did not infringe and that Pulse's infringement in connection with the remaining sales was not willful. Pulse cross-appealed with respect to invalidity and infringement. The Federal Circuit affirmed the district court in all respects.

The court of appeals first rejected Halo's arguments with respect to infringement, holding that the undisputed record established for most of the sales at issue that Pulse had neither sold nor offered to sell the accused products in the United States. *Id.*, 14a, 19a. The court thus affirmed the district court's determination that Halo had failed to establish liability with respect to the bulk of the sales it had accused of infringement. This issue is not before this Court.

The court of appeals affirmed as to obviousness as well, relying exclusively upon Pulse's failure to move for judgment as a matter of law during trial:

> It is true that the record evidence indisputably shows that almost all the limitations in the asserted claims were known elements of electronic packages that existed in the prior art. However, Pulse did not file a motion during trial under Fed. R. Civ. P. 50(a) on the issue of obviousness before that issue was submitted to

> the jury and thus waived its right to challenge the jury's implicit factual findings underlying the nonobviousness general verdict. The district court thus correctly presumed that the jury resolved all factual disputes relating to the scope and content of the prior art and secondary considerations in Halo's favor. Based upon those presumed factual findings, the court did not err in reaching the ultimate legal conclusion that the asserted claims were not invalid for obviousness.

Id., 22a-23a.

With respect to willful infringement, the court of appeals observed that Halo had given Pulse notice of its patents in 2002 and that, even though Halo did not then accuse Pulse of infringing those patents, Pulse had reviewed the patents and concluded that they were likely invalid in light of prior art products. *Id.*, 20a-21a. Likewise, at trial Pulse had presented "a substantial question as to the obviousness of the Halo patents." *Id.*, 21a. As the court explained:

> Pulse presented evidence that the prior art disclosed each element of the asserted claims, that it would have been predictable to combine and modify the prior art to create the claimed electronic packages, and that there were differences between the prior art considered by the PTO and the prior art introduced at trial. Pulse also challenged Halo's evidence of secondary considerations.

Id., 21a (citation omitted). Thus, the district court "properly considered the totality of the record evidence, including the obviousness defense that Pulse developed during the litigation," in finding no willfulness. *Id.*, 21a.

Judge O'Malley, joined by Judge Hughes, concurred, but wrote separately to suggest that the court of appeals reexamine its standard for the imposition of increased damages. In their view, this Court's decisions in *Octane Fitness, LLC v. ICON Health & Fitness, Inc.*, 134 S. Ct. 1749 (2014), and *Highmark, Inc. v. Allcare Health Management Systems, Inc.*, 134 S. Ct. 1744 (2014), called for a review of the *Seagate* standard, and of the question whether the jury should play a role in the enhancement decision. Pet. App. 25a-31a. But Judges O'Malley and Hughes agreed that, under existing law, Halo had failed to establish any entitlement to increased infringement damages.

b. Halo petitioned for rehearing en banc with respect to the panel's willful infringement holding. The en banc court of appeals denied the petition, over a dissent by Judge O'Malley, again joined by Judge Hughes, that largely restated their panel concurrence.

Judge Taranto, joined by Judge Reyna, filed an opinion concurring in the denial of rehearing. Judge Taranto observed that although a variety of questions might be raised concerning the standard for increased damages, most were not raised by Halo in this case. Halo did not dispute, for example, that willful infringement was a necessary predicate for an award of increased damages under section 284. *Id.*, 144a. Judge Taranto noted in this regard that the legislative history of the America Invents Act, Pub. L. No. 112-29, 125 Stat. 284 (2011), made clear that Congress was aware of the *Seagate* standard for increased damages under Section 284 and chose not to amend that statute, and took other actions that indicated it accepted willfulness as a pre-condition to

increased damages under Section 284. Pet. App. 141a-142a.

Judge Taranto noted that beyond not disputing the predicate requirement of willful infringement, Halo also had not raised any questions regarding who was to make the enhancement decision (judge or jury), the standard of proof, or the standard of review on appeal.[2] The only question Halo had raised was whether the objective reasonableness of Pulse's invalidity defense must be assessed based only on Pulse's beliefs at the time of infringement. That question, Judge Taranto explained, was readily answered in the negative by controlling precedent, in particular this Court's "authoritative *Safeco* [*Insurance Co. of America v. Burr*, 551 U.S. 47 (2007)] decision addressing the meaning of 'willfulness' in non-criminal contexts," *id.*, 144a-145a, an answer not affected in any way by the decision in *Octane*.

SUMMARY OF THE ARGUMENT

1. Proof of willful patent infringement is required for an award of increased damages under Section 284. Congress enacted Section 284 in 1952 in the face of more than a century of statutory history and case law that made clear that increased damages were a punitive remedy available only for the kind of aggravated, malicious infringement that would today be described as willful. This settled understanding was incorporated into Section 284's enhancement provision in 1952. Since then, Congress and this Court have underscored that Section 284 authorizes

---

[2] With respect to the standard of appellate review, Judge Taranto noted that beyond Halo's waiver, the standard of review was not an issue in this case in any event, given that the district court had rejected Halo's claim of willful infringement at trial. Pet. App. 144a.

the award of increased damages only in cases involving willful infringement. Beyond this legislative history and patent-law precedent, the common law and due process principles that apply to punitive damages in general independently compel the conclusion that increased damages may be awarded only for willful infringement.

2. The Federal Circuit's *Seagate* decision established an appropriate, dependable, and fair methodology for determining which cases involving patent infringement are appropriate for awards of increased damages under Section 284. That decision was the result of the proper interpretation of the history of the statutory provision, Congress's intent reflected in that history, and prior case law. The *Seagate* test for willful infringement reflects the analysis applied by this Court and the regional circuit courts prior to 1982, and it embodies well-settled concepts of willfulness from other areas of law, where willfulness requires at least reckless disregard for the rights of another, with recklessness assessed by an objective standard.

3. Sound policy considerations weigh heavily in favor of the view that Section 284 authorizes an award of increased damages only for willful patent infringement. A less-stringent standard will threaten innovation by discouraging competitors and the public from challenging the scope and validity of patent monopolies. As this Court has recognized, a patent right is a two-edged sword which, when kept within proper limits, will spur invention and creativity, but when expansively applied will stifle competition and innovation. Petitioners' ambiguous and freewheeling "totality of the circumstances" test poses that danger by making increased damages both too readily available and utterly unpredictable.

Further, a lower bar for increased damages will result in an increase in demands and lawsuits by non-practicing entities aimed at extracting unjustified settlements and licensing fees from those who actually develop, make, and sell products. Efforts to extort windfalls of this type will increase costs and consumer prices while providing no countervailing public benefits.

4. Because of the fundamental differences between Sections 284 and 285, this Court's decisions in *Octane* and *Highmark* regarding attorneys' fees are not inconsistent with, nor do they call for a change in, the Federal Circuit's approach to increased infringement damages. Neither the long-established willfulness requirement in general, nor the standard applied in *Seagate*, is called into question by *Octane* and *Highmark* because nothing in either opinion addressed increased damages under the Patent Act. Sections 284 and 285, although adjacent to one another in the U.S. Code, are largely unrelated, with vastly different purposes, legislative histories, and judicial interpretations. Moreover, the policy considerations that supported the results in *Octane* and *Highmark* point to affirmance of the existing standard in this case.

ARGUMENT

I. INCREASED DAMAGES CAN BE AWARDED UNDER SECTION 284 ONLY IF THE DISTRICT COURT DETERMINES THAT THERE HAS BEEN WILLFUL PATENT INFRINGEMENT.

Since 1836, increased damages for patent infringement have been available only for aggravated, malicious—*i.e.*, willful—patent infringement. Like punitive damages in other contexts, the

enhancement remedy is designed to make an example of those whose conduct is not just unlawful but *willfully* so. Congress has had ample opportunity to alter the prevailing rule—including when it enacted Section 284—but it has chosen not to do so. Instead, through a series of recent amendments to the Patent Act, Congress has repeatedly reaffirmed the willfulness requirement.

A. When Congress Enacted Section 284, It Did So Against The Backdrop Of A Long-Established Willfulness Requirement.

1. Section 284 was enacted as part of the 1952 Patent Act, but it ultimately traces back to the 1836 Act, which overhauled the nation's patent system to deal with the harms arising from a massive proliferation of bad patents. Prior to 1836, patents were granted without any formal review of the novelty of the applicant's claimed invention, and treble damages were mandatory. Patent Act of 1793, ch. 11, § 3, 1 Stat. 318, 321-22 (issuance requirements); *id.* § 5 (treble damages), 1 Stat. at 322. This system "flooded" the nation with patents, giving rise to a "great number of lawsuits" that were "ruinous to the parties." S. Rep. No. 24-338, at 3 (1836). As the sponsor of the 1836 Act explained in a report to the Senate—in terms that find echoes in the modern rise of non-practicing entities—owners of purported "inventions" long in public use, "armed" with invalid patents, "scour[ed] the country, and by threats of prosecution, compel[led] those who [were] found using the thing patented, to pay the patent price or commutation tribute. This exaction, unjust and iniquitous as it [was], [was] usually submitted to." *Id.* at 3-4.

Against this backdrop, the 1836 Act is best known for its creation of the modern patent examination

process to block issuance of invalid patents, but more pertinent here, it also replaced mandatory treble damages with a discretionary regime that reserved increased damages for wanton and malicious infringement. As this Court explained in *Seymour v. McCormick*, 57 U.S. (16 How.) 480, 488 (1854):

> Experience had shown the very great injustice of a horizontal rule equally affecting all cases, without regard to their peculiar merits. The defendant who acted in ignorance or good faith, claiming under a junior patent, was made liable to the same penalty with the wanton and malicious pirate. This rule was manifestly unjust.

In contrast to the earlier regime, the 1836 Act gave courts authority "to inflict vindictive or punitive damages." *Id.* at 489.

Seymour is in line with other early decisions from this Court recognizing the punitive and extraordinary nature of increased damages under the 1836 Act. In *Dean v. Mason*, 61 U.S. (20 How.) 198, 203 (1858), for example, the Court noted that compensatory damages are generally "sufficient to protect the rights of the owner; but where the wrong has been done, under aggravated circumstances, the court has the power, under the statute, to punish it adequately, by an increase of the damages." *See also Tilghman v. Proctor*, 125 U.S. 136, 143-44 (1888) ("[T]he court may, whenever the circumstances of the case appear to require it, inflict vindictive or punitive damages, by rendering judgment for not more than thrice the amount of the verdict."); *Root v. Railway*, 105 U.S. 189, 196 (1882) (1836 Act allowed the court to "inflict punitive damages to the extent of trebling the verdict"). And the lower courts followed this Court's direction in this respect, noting that departure from

the "general rule" of actual damages was appropriate only for "aggravated" cases—as opposed to cases where an infringer "honestly supposed that [the patent] was void." *Guyon v. Serrell*, 1 Blatchf. 244, 246 (C.C.S.D.N.Y. 1847); *see also, e.g.*, *Carr v. Rice*, 5 F. Cas. 140, 145 (C.C.S.D.N.Y. 1856) (No. 2,440) ("There can be rarely occasion for vindictive damages; because, almost invariably, the infringement arises out of some colorable claim of right, by the party sued.").

Making actual damages the rule and punitive damages the exception brought patent infringement in line with other torts. As *Seymour* noted, "there is no good reason why taking a man's property in an invention should be trebly punished, while the measure of damages as to other property is single and actual damages [except] where the injury is wanton or malicious." 57 U.S. (16 How.) at 488-89. And as is true for other punitive remedies, the authority to increase damages for patent infringement has always been limited. Indeed, from the earliest days under the 1836 Act, enhancement has been reserved for cases of willful misconduct.

2. This Court's first cases analyzing increased patent damages under the 1836 Act drew a sharp distinction between "good faith" infringers, on the one hand, and "willful" or "wanton" infringers, on the other. Under these cases, the "good faith" infringer would pay only actual damages, but the "willful" infringer—the "pirate"—could face increased damages. *See, e.g.*, *id.* at 488 (distinguishing between a "defendant who acted in ignorance or good faith" and "the wanton and malicious pirate"); *Corning v. Burden*, 56 U.S. (15 How.) 252, 271 (1854) (explaining that a defendant acting "in good faith," was not "a wanton infringer," and should not face "the same

stringent and harsh rule of damages which might be justly inflicted on a mere pirate"); *Livingston v. Woodworth*, 56 U.S. (15 How.) 546, 560 (1854) (holding that the accused infringers, who were not "wanton infringers," should not face "damages, by way of penalty"); *Hogg v. Emerson*, 52 U.S. (11 How.) 587, 607 (1850) (explaining that, under the 1836 Act, treble damages were inappropriate "if the maker of the machine appeared in truth to be ignorant of the existence of the patent right, and did not intend any infringement").

The early cases from the lower courts are in accord. Many courts recognized that the object of increased damages under the 1836 Act was to deal with "the case of a willful and aggravated violation of a patent right." *Merchant v. Lewis*, 17 F. Cas. 37, 37 (C.C.S.D. Ohio 1857) (No. 9,437); *Bell v. McCullough*, 3 F. Cas. 108, 109 (C.C.S.D. Ohio 1858) (No. 1,256) ("The object of this provision was to remunerate patentees who were compelled to sustain their patents against wanton and persevering infringers."); *Brodie v. Ophir Silver Mining Co.*, 4 F. Cas. 202, 203-04 (C.C.D. Cal. 1867) (No. 1,919) (Field, J.) (explaining that enhancement authority "should only be exercised to remunerate parties who have been driven to litigation to sustain their patents by wanton and persistent infringement"); *Buerk v. Imhaeuser*, 4 F. Cas. 594, 595 (C.C.S.D.N.Y. 1876) (No. 2,107) ("They were not willful infringers, and, therefore, are not to be visited with punitive damages."); *Ford v. Kurtz*, 12 F. 789, 789 (C.C.N.D. Ill. 1882) (Harlan, J.) (holding that, because infringement "was neither wilful nor malicious," the case did "not justify a decree . . . beyond the net profits realized from the manufacture and sale of the patented articles"); *Morss v. Union Form Co.*, 39 F. 468, 474 (C.C.D. Conn. 1889)

(refusing to enhance based merely on defendants' "forceful method of business," but allowing enhancement during a narrow window of time in which infringement was "willful or wanton"); *Rockwood v. Gen. Fire Extinguisher Co.*, 37 F.2d 62, 66 (2d Cir. 1930) ("In the absence of a deliberate purpose to infringe, no such punitive damages should have been granted.").

Furthermore, courts refused to award increased damages where the infringer had good reason to believe the accused conduct was lawful, such as where the patent's validity was questionable.[3] *See, e.g.*, *Guyon*, 1 Blatchf. at 246 (refusing enhancement where the infringer may "have honestly supposed that [the patent] was void"); *B.F. Goodrich Co. v. Consol. Rubber Tire Co.*, 251 F. 617, 624-25 (7th Cir. 1918) ("It is, of course, the rule that, if the manufacturer honestly believed that he had a right to manufacture this rubber tire, he should not be mulcted in punitive damages."); *Egry Register Co. v. Standard Register Co.*, 23 F.2d 438, 443 (6th Cir. 1928) (holding that there was no basis for enhancement where conduct was not "willful," since

---

[3] Petitioners argue that *Topliff v. Topliff*, 145 U.S. 156 (1892), holds that increased damages may be appropriate even where a patent's validity is subject to doubt. Halo Br. 24-25; Stryker Br. 48 n.12. In doing so, Petitioners misleadingly suggest that *Topliff* involved a "patented device" covered by a single patent of dubious validity, when in fact *Topliff* involved two separate patents, only one of which presented a close question on validity. *Compare* 145 U.S. at 161 (affirming without reservation the validity of Augur patent), *with id.* at 164 (noting that validity of Topliff and Ely reissue patent was "by no means free from doubt"). *Topliff* is therefore consistent with *Seagate*: a defendant's objectively reasonable defense to the infringement of one patent does not immunize him from increased damages where his infringement involves others as well.

"[b]oth as to validity and infringement there was doubt"). Under these cases, willful misconduct was not merely a factor to be weighed; it was an absolute prerequisite to enhancement.

3. This is the backdrop against which Congress passed Section 284 as part of the Patent Act of 1952. Guided by *Seymour* and other early decisions of this Court, the law had clearly settled on a willfulness requirement, notwithstanding the seemingly open-ended language of the statute. Congress obviously could have superseded the prevailing rule, but it did not do so. To the contrary, Section 284 merely consolidated the two prior statutory provisions (one for actions at law and the other for claims in equity), without altering in any way the existing practice in the federal courts. *See* S. Rep. No. 82-1979, at 29 (1952); H.R. Rep. No. 82-1923, at 29 (1952); *see also* 35 U.S.C. § 284 (2012) ("Historical and Revision Notes").

Where Congress legislates against the backdrop of such a consistent body of law, and expresses no dissatisfaction with it and no intent to change it, it is understood to have incorporated that prior law into the statute. *See, e.g., Microsoft Corp. v. i4i Ltd. P'ship*, 131 S. Ct. 2238, 2246 (2011); *Neder v. United States*, 527 U.S. 1, 23 (1999) (invoking the "rule that Congress intends to incorporate the well-settled meaning of the common-law terms it uses").

On this point, *Microsoft* is particularly instructive. In *Microsoft*, as in this case, the petitioner argued that the Federal Circuit had created a specific rule—there, a standard of proof for invalidity; here, a willfulness requirement—where the statute's text did not expressly prescribe that rule. *See* Petition at 2, *Microsoft v. i4i*, No. 10-290 (S. Ct. Aug. 27, 2010). But in *Microsoft*, as in this case, the specific rule had

long been applied by the time Congress enacted the specific provision at issue. As this Court explained, "had Congress intended to drop" the established rule, "we assume it would have said so expressly." *Microsoft*, 131 S. Ct. at 2250.

Willfulness had been a prerequisite for increased damages for more than 100 years when Congress enacted Section 284, and nothing in Section 284 indicates any intent to change course. The statute is therefore best read to incorporate the existing willfulness requirement.

B. Since 1952, Congress And The Courts Have Left Untouched And Reaffirmed The Willfulness Requirement This Court Has Imposed For Increased Damages.

1. This Court's decisions since 1952, along with the weight of the authority in the lower courts prior to the creation of the Federal Circuit, further support the willfulness requirement for increased damages. In *Aro II*, for example, the Court indicated that a patentee "could in a case of willful or bad-faith infringement recover punitive or 'increased' damages under the statute's trebling provision." *Aro Mfg. Co. v. Convertible Top Replacement Co.*, 377 U.S. 476, 508 (1964) (*Aro II*) (plurality). Likewise, *Dowling v. United States*, 473 U.S. 207, 227 n.19 (1985), noted that the patent laws permitted "treble damages for willful infringement."

Petitioners suggest that *Aro II* and *Dowling* are ambiguous—that the cases stand for the proposition that willfulness may be sufficient for enhancement, but not necessary. Halo Br. 21; Stryker Br. 34. But Petitioners never explain why, if enhancement is permitted in such a wide range of circumstances, this Court has consistently singled out *willfulness* as the

relevant inquiry. Nor do they explain how *Aro II* and *Dowling* can remain ambiguous when read in light of the century of cases that preceded them. In truth, it is more sensible to read those statements to reflect the principle that willfulness is a necessary, but not sufficient, requirement for enhanced damages and that the district court, even after finding willfulness, would have discretion not to award any additional damages or to award less than treble damages.

In any event, long before *Seagate*, the regional courts of appeals reaffirmed the willfulness requirement under Section 284. The Sixth Circuit, for example, held that "there *must* be a finding that the infringement was wilful" in order to justify increased damages, and that the "existence of honest doubt concerning the validity of a patent precludes a finding of wilfulness." *Eltra Corp. v. Basic Inc.*, 599 F.2d 745, 757 (6th Cir. 1979) (emphasis added); *see also Union Carbide Corp. v. Graver Tank & Mfg. Co.*, 282 F.2d 653, 675 (7th Cir. 1960) ("it is only on the basis of conscious and wilful infringement that exemplary or punitive damages are allowed"); *Wilden Pump & Eng'g Co. v. Pressed & Welded Prods. Co.*, 655 F.2d 984, 989 (9th Cir. 1981) ("[I]ntent is crucial to the imposition of increased damages."). Likewise, in *Baumstimler v. Rankin*, 677 F.2d 1061, 1073 (5th Cir. 1982), the Fifth Circuit explained that enhancement was discretionary "when the infringement is willful and wanton," but there was no such willfulness—and could be no enhancement—where the accused infringer "could have maintained a reasonable doubt as to the validity of the . . . patent."

2. Congress has not just acquiesced in the willfulness requirement; it has implicitly endorsed and thereby ratified the requirement in three separate amendments to the Patent Act since 1992.

Patent and Plant Variety Protection Remedy Clarification Act, 106 Stat. 4230 (1992) (Patent Remedy Act). — In 1992, Congress enacted a law that purported to abrogate state sovereign immunity from patent infringement suits. During the debates over what would become the Patent Remedy Act, one of the concerns raised by legislators was that states should not be routinely subjected to treble damages. To address this concern, Senator Thurmond offered an amendment that would have barred treble damages awards against states. S. Rep. No. 102-280, at 9 (1992).

But Senator Thurmond's amendment was not adopted in the face of counter-arguments that treble damages are "awarded in only the most flagrant cases" in light of the willfulness requirement. *Id.* at 10; *see also id.* (explaining that a "plaintiff must prove that the infringement was willful under 35 U.S.C. 284"). Against the backdrop of the willfulness requirement, Congress enacted the statute, which made states liable for "treble damages under section 284." Patent Remedy Act, Pub. L. No. 102-560, § 2, 106 Stat. 4230, 4230 (1992) (enacting 35 U.S.C. § 296(b)). It is inconceivable that Congress would have exposed the states to potentially ruinous liability in the absence of a substantial hurdle to recovering enhanced damages, which of course willfulness is.[4]

---

[4] Congress's abrogation of state sovereign immunity for patent cases was struck down in *Florida Prepaid Postsecondary Education Expense Board v. College Savings Bank*, 527 U.S. 627 (1999), as beyond Congress's enforcement power under § 5 of the Fourteenth Amendment. But that does not change the fact that, when Congress enacted the statute, it did so in reliance on an understanding that increased damages would be available only for willful misconduct.

Domestic Publication of Foreign Filed Patent Applications Act of 1999, 113 Stat. 1501A-561. — In 1999, Congress enacted another law that endorsed the existing willfulness requirement, this time in connection with so-called "provisional rights."

As a general rule, only an issued patent gives its owner the right to exclude others from practicing an invention, whereas an application for a patent provides no such rights. But when Congress enacted a statute that provided for the broader and earlier publication of patent applications prior to issuance, it worried that an applicant's competitors might copy an invention disclosed in a published patent application with impunity. To address this concern, Congress gave patentees "provisional rights," *i.e.*, the right to obtain (in addition to all other remedies) a reasonable royalty from certain infringers who began making or using the patented invention after the application that led to the patent was published but before the patent issued. *See* 35 U.S.C. § 154(d).

As part of the same law that created provisional rights, Congress amended Section 284 to provide that increased damages "shall not apply to provisional rights under section 154(d)." Pub. L. No. 106-113, § 4506, 113 Stat. 1501A-561, 1501A-566 (1999). A House Report on what would later become this Act (when the bill was reintroduced in the next Congress) explained why increased damages for provisional rights made no sense:

> This amendment has been made because *the willfulness necessary for the award of increased damages* cannot exist in the context of provisional rights because the fact of infringement cannot be determined until a patent has issued. That is, there can be no willful infringement in the period for which

> provisional rights may be available because 'infringement' within that period can only be defined by the terms of the patented claims that are, of course, not available until a patent issues.

H.R. Rep. No. 105-39, at 64 (1997) (emphasis added).

The fact that the amendment to Section 284 was expressly enacted as a "conforming amendment" underscores this point from the legislative history. *See* 113 Stat. at 1501A-566. In light of the willfulness requirement, increased damages under Section 284 for copying an invention disclosed in a patent application are not merely bad policy; they are nonsensical. One cannot willfully infringe before the patent issues, because the claims may change during prosecution of the patent, and the issued claims may be sufficiently narrow that they do not apply to the accused infringer's conduct, or broad enough to give rise to serious validity concerns. On the other hand, Petitioners' reading of Section 284 does not explain why the conforming amendment would have been necessary, since—in the absence of the willfulness requirement—there would be no logical inconsistency between provisional rights and increased damages.

Leahy-Smith America Invents Act, 125 Stat. 284 (2011) (America Invents Act). — Most recently and tellingly, Congress endorsed the existing willfulness requirement in connection with the America Invents Act.

The America Invents Act was passed after years of concerted efforts to reform the patent laws. In earlier iterations, the package of reforms included provisions addressing patent damages, including increased damages. For example, Senator Leahy (a named co-sponsor of the America Invents Act) introduced the Patent Reform Act of 2009, which would have

significantly narrowed the circumstances in which increased damages are available. Patent Reform Act of 2009, S. 515, 111th Cong., § 4 (2009); *see also* S. Rep. No. 111-18, at 12 (2009) (endorsing *Seagate*, including its "objectively reckless standard for finding willful infringement," as "a positive development," but explaining that further "statutory guidance" was required to "reduce unwarranted allegations of willfulness"). But by 2011, in light of the "great strides" in the Federal Circuit's damages jurisprudence, Senator Leahy noted that there was a "consensus that legislation need not and, in fact, should not affect the law of damages." Cong. Rec. S1348, S1350 (daily ed. Mar. 8, 2011) (statement of Sen. Leahy). In other words, Congress determined on further study that the existing law of damages—including the willfulness requirement in general and *Seagate* in particular—should not be disturbed.

Likewise, Senator Kyl, speaking in support of the America Invents Act, explained that the 2009 bill would have made the "grounds for allowing awards of treble damages . . . exceedingly narrow." Cong. Rec. S1360, S1374 (daily ed. Mar. 8, 2011) (statement of Sen. Kyl). According to Senator Kyl, "Treble damages are authorized in order to deter manufacturers," when they discover a given feature "is protected by a valid patent," from choosing to "infringe [a] competitor's patent." *Id.* By retaining the existing regime and rejecting the reforms proposed in 2009, the America Invents Act preserved the role of increased damages "as a meaningful deterrent to reckless or wanton conduct." *Id.*

Congress's endorsement of the existing willfulness requirement made its way into the enacted text of the America Invents Act as well. In 35 U.S.C. § 298, Congress enacted a prohibition on the use of an

accused infringer's failure "to obtain advice of counsel" as evidence "that the accused infringer willfully infringed the patent." This provision is unquestionably directed to the willfulness requirement for increased damages, since neither "willfully infringed" nor "willful infringement" appears anywhere else in the Patent Act. The negative inference from failing to obtain advice of counsel emerged from the Federal Circuit's much-criticized decision in *Underwater Devices, Inc. v. Morrison-Knudsen Co.*, 717 F.2d 1380 (Fed. Cir. 1983), which misapplied the willfulness concept in a number of ways. *See id.* at 1389-90 (holding that a potential infringer with notice of a patent had an "affirmative duty" to "seek and obtain competent legal advice from counsel before the initiation of any possible infringing activity"); *but see Knorr-Bremse Systeme Fuer Nutzfahrzeuge GmBH v. Dana Corp.*, 383 F.3d 1337, 1341 (Fed. Cir. 2004) (en banc) (abolishing "adverse inference" from "failure to obtain or produce an exculpatory opinion of counsel").

Considered in isolation, the text of Section 298 is consistent with either the established willfulness requirement or with a regime that treats willfulness as sufficient but not necessary to authorize increased damages. But read in the context of the history of increased damages in Congress and the courts, as well as the legislative history of the America Invents Act itself, Section 298 provides further evidence that increased damages are reserved for only willful infringement.

C. The Willfulness Requirement Reflects Common Law And Due Process Requirements For Punitive Damages.

As discussed above, and as the government concedes, increased damages under Section 284 are

punitive. US Br. 17. Section 284's willfulness requirement reflects the historical common law and due process requirements for the award of punitive damages.

1. An initial teaching of the common law, which is reflected in the willfulness requirement, is that the imposition of punitive damages must be justified by the misconduct itself. As this Court explained in *Exxon Shipping Co. v. Baker*, 554 U.S. 471, 493 (2008), "[t]he prevailing rule in American courts . . . limits punitive damages to cases of . . . 'enormity,' where a defendant's conduct is 'outrageous.'" *See also* Restatement (Second) of Torts § 908(1) (1979) ("Punitive damages are damages . . . awarded against a person to punish him for his outrageous conduct and to deter him and others like him from similar conduct in the future."). Indeed, this common law principle has a constitutional dimension: this Court has held that, as a matter of due process, the punishment imposed upon the defendant must be "for the conduct that harmed the plaintiff, not for being an unsavory individual or business." *State Farm Mut. Auto. Ins. Co. v. Campbell*, 538 U.S. 408, 423 (2003).

The text of Section 284 codifies the background rule that punitive damages must be based on the underlying tortious conduct. The "damages" that may be increased under the second paragraph of Section 284 are the "damages . . . *for the infringement*" described in the first paragraph. 35 U.S.C. § 284 (emphasis added). In the end, the total award—including the enhancement—is always damages "for the infringement." Thus, contrary to Stryker's suggestion in the companion case, Section 284 does not authorize a district court to pile on

additional damages based on other bad acts of the defendant. Stryker Br. 30-32.

For example, increased damages are not available to recover the fees associated with a defendant's abusive conduct in litigation—that is separately provided for by Section 285 under the standard set forth in *Octane*. Likewise, enhancement is not available to cover the harm associated with the delayed payment of a royalty to which the patentee is entitled—a patent owner's right to recover interest is separately provided for under the first paragraph of Section 284, and it has nothing to do with the punitive purposes of increased damages. *See generally Gen. Motors Corp. v. Devex Corp.*, 461 U.S. 648 (1983).[5]

This Court's recognition that increased damages for patent infringement are punitive also precludes any enhancement for compensatory purposes. *See, e.g.*, *Tilghman*, 125 U.S. at 143-44 (describing increased patent damages as "punitive"). Indeed, to use increased damages to correct for perceived shortfalls in compensation, *see* Stryker Br. 42, conflicts with the text of Section 284 itself, which requires that the award of actual damages be "adequate to compensate

---

[5] Petitioners cite *General Motors*'s interpretation of Section 284's prejudgment interest provision to suggest that it is improper to read the increased damages provision to include any constraints. Halo Br. 19; Stryker Br. 20. But *General Motors* distinguished the prejudgment interest provision, which Congress added for the first time in 1946, from a case—like this one—"in which Congress has reenacted statutory language that the courts had interpreted in a particular way," in which it "may well be appropriate to infer that Congress intended to adopt the established judicial interpretation." 461 U.S. at 653. Indeed, Halo agrees that increased damages are limited by "this Court's historical practice." Halo Br. 19. The parties dispute only the extent of those limits.

for the infringement." It is the patent owner's burden to "show his damages by evidence" at trial, and in the end, the damages "must be proved, and not guessed at." *Philip v. Nock*, 84 U.S. (17 Wall.) 460, 462 (1873). A disappointed patentee may challenge the jury's compensatory award in the court of appeals, but he may not correct his own failure to persuade the jury by appealing to the district judge's authority to increase damages under Section 284. *Cf. State Farm*, 538 U.S. at 419 ("It should be presumed a plaintiff has been made whole for his injuries by compensatory damages . . . ."). The damages found by the jury are by statutory definition "adequate to compensate for the infringement."[6] Moreover, the suggestion that district judges can award additional compensatory damages raises serious Seventh Amendment concerns. *See Cooper Indus., Inc. v. Leatherman Tool Grp., Inc.*, 532 U.S. 424 , 437 (2001) (distinguishing between "the level of punitive damages," which "is not really a 'fact,'" and "the measure of actual damages suffered, which presents a question of historical or predictive fact" and thus "implicate[s] Seventh Amendment concerns").

---

[6] Where a defendant's wrongdoing makes it difficult for the plaintiff to establish the precise amount of its injury, the courts in patent, as in other, cases invoke the principles of *Story Parchment Co. v. Paterson Parchment Paper Co.*, 282 U.S. 555, 563 (1931), to ease the plaintiff's burden; they do not simply "increase" damages over and above what the plaintiff has been able to prove. The suggestion of *amicus* Nokia that the Federal Circuit has used Section 284's enhancement authority to address patentees' inability to establish compensatory damages badly misreads the cases it cites. Nokia Br. 10. Those cases merely reflect that damages "adequate to compensate for the infringement" under Section 284 may exceed the "reasonable royalty" that is the statutory minimum.

Stryker's brief in the companion case relies on decisions of lower courts suggesting that increased damages may sometimes have been awarded for compensatory purposes, particularly before the Patent Act was amended to permit injunctive relief. Stryker Br. 30-34. But Stryker's reliance on these early cases is misplaced.

First, the lower court cases suggesting a compensatory purpose for enhancement conflict with this Court's repeated recognition that increased patent damages are punitive. *See Tilghman*, 125 U.S. at 143-44; *Seymour*, 57 U.S. (16 How.) at 489 (referring to "vindictive or punitive damages"); *Dean*, 61 U.S. (20 How.) at 203 (referring to court's power "to punish . . . by an increase of the damages"); *Root*, 105 U.S. at 196 (citing court's power "to inflict punitive damages"). As recently as 2008, this Court noted that Section 284 is an example of a statute that "peg[ged] punitive to compensatory damages using a ratio or maximum multiple." *Exxon*, 554 U.S. at 506-07.

Second, as this Court recognized in *Exxon*, the general understanding of the purposes of punitive awards has evolved over time, and "[r]egardless of the alternative rationales over the years, the consensus today is that punitives are aimed not at compensation but principally at retribution and deterring harmful conduct." *Id.* at 492 & n.9; *see also* Restatement (Second) of Torts § 908 cmt. a ("The purposes of awarding punitive damages . . . are to punish the person doing the wrongful act and to discourage him and others from similar conduct in the future."). To the extent that early discussions of increased patent damages sometimes stray from the remedy's core punitive function, they are best understood as relics of a bygone era. And even if the

predecessors to Section 284 had permitted enhancement for compensatory purposes, the addition of the statutory requirement that the jury's damages award be "adequate" compensation would have superseded the earlier rule. *Compare, e.g.*, 35 U.S.C. § 67 (1946) (providing merely for "damages for the infringement"), *with id.* § 284 (providing for "damages *adequate to compensate* for the infringement" (emphasis added)).[7]

Moreover, Stryker's suggestion that increased damages were also used as a substitute for injunctive relief only undercuts its argument that enhancements were sometimes compensatory. Stryker Br. 30. "[C]ompensatory damages are quintessentially backward looking," and are intended "to make victims whole" following an injury caused by the defendant's tortious conduct. *Landgraf v. USI Film Prods.*, 511 U.S. 244, 282 (1994). In contrast, a punitive award is at least partly forward-looking, because the increase is justified by the need to deter future misconduct. Thus, cases that used enhancement's deterrent function as a substitute for

---

[7] For similar reasons, Petitioners are wrong to suggest that ambiguous references in this Court's early cases to a patent owner's "unnecessary expense" or an accused infringer's litigiousness cast doubt on the well-established willfulness requirement. *See, e.g.*, Halo Br. 15 (citing *Teese v. Huntingdon*, 64 U.S. (23 How.) 2, 9 (1860), and *Day v. Woodworth*, 54 U.S. (13 How.) 363, 372 (1852)); Stryker Br. 30-31 (citing *Day* and *Clark v. Wooster*, 119 U.S. 322, 326 (1886)). None of the cases actually holds that litigation misconduct on its own—without any showing of willfulness—can authorize increased damages. And as Stryker acknowledges in the companion case, the "need to compensate some prevailing parties for their litigation expenses" has been addressed by a separate provision of the Patent Act since 1946. Stryker Br. 30 n.5 (citing 35 U.S.C. § 285).

injunctive relief further support the view that increased patent damages are punitive.

2. The common law of punitive damages does not merely preclude compensatory enhancements; it also constrains the circumstances in which a punitive award may be given. This Court has said, for example, that a plaintiff may recover only compensatory damages, "unless [the tortious act] was done wilfully, or was the result of that reckless indifference to the rights of others which is equivalent to an intentional violation of them." *Smith v. Wade*, 461 U.S. 30, 42 (1983) (emphasis removed) (quoting *Milwaukee & St. Paul Ry. v. Arms*, 91 U.S. 489, 493 (1876)); *see also Exxon*, 554 U.S. at 493 (noting rule that conduct must be "'outrageous,' owing to 'gross negligence,' 'willful, wanton, and reckless indifference for the rights of others,' or behavior even more deplorable" (internal citation omitted)); *Phila., Wilmington & Balt. R.R. v. Quigley*, 62 U.S. (21 How.) 202, 214 (1859) (explaining that injury must be "inflicted maliciously or wantonly"); Restatement (Second) of Torts § 908(2) (describing requirement that conduct be "outrageous, because of the defendant's evil motive or his reckless indifference to the rights of others"). The willfulness requirement for increased patent damages is consistent with these established common-law constraints.

To be sure, the cases use a variety of terms to identify the types of conduct that will authorize a punitive award. But the various terms—"willful," "wanton," "reckless," and the like—are largely interchangeable in practice. *See Safeco Ins. Co. of Am. v. Burr*, 551 U.S. 47, 57 (2007) (noting that "willfulness" is "generally taken . . . to cover not only knowing violations of a standard, but reckless ones as

well. This construction reflects common law usage, which treated actions in 'reckless disregard' of the law as 'willful' violations." (internal citations omitted)); *see also Trans World Airlines, Inc. v. Thurston*, 469 U.S. 111, 126 (1985) (holding that a "reckless disregard" standard was appropriate for ADEA's increased damages provision for "willful" violations); W. Keeton et al., *Prosser and Keeton on Law of Torts* § 34, at 212 (5th ed. 1984) (noting that any "distinctions [among the terms 'willful,' 'wanton,' and 'reckless'] have consistently been ignored, and the three terms have been treated as meaning the same thing, or at least as coming out at the same legal exit").[8] As the *Safeco* Court explained, the "common law has generally understood" the requisite "recklessness" (or its equivalents) "as conduct violating an objective standard: action entailing 'an unjustifiably high risk of harm that is either known or so obvious that it should be known.'" 551 U.S. at 68 (quoting *Farmer v. Brennan*, 511 U.S. 825, 836 (1994)).

Thus, at a minimum, the willfulness requirement for increased patent damages means that increased damages are authorized only where the defendant acted notwithstanding an objectively high risk, based on known or obvious facts, that his conduct would cause harm, *i.e.*, violate the plaintiff's legitimate patent rights.

---

[8] For this reason, the suggestion of the government and *amicus* Ericsson that this Court's passing use of the disjunctive "or" in *Aro II* implied some distinction between "willful" and "bad-faith" infringement is misplaced. US Br. 25; Ericsson Br. 23.

II. *SEAGATE'S* TEST FOR INCREASED DAMAGES, AS APPLIED IN THIS CASE, APPROPRIATELY IMPLEMENTS THE WILLFULNESS REQUIREMENT.

In many respects, *Seagate* is an unremarkable case. Taking the willfulness requirement as its starting point, the *Seagate* court simply applied an established "recklessness" standard, as the courts of appeals had done long before the creation of the Federal Circuit, and as has long been applied in the punitive damages context more broadly.

What makes *Seagate* a seminal decision is that it overruled the aberrant and patent-specific "duty of due care" approach to increased damages that culminated in *Underwater Devices*. That approach caused an explosion of allegations of willful infringement and the rise of a cottage industry in "opinions of counsel."[9] Neither the Petitioners in these companion cases nor the government overtly advocates a return to *Underwater Devices*, and for good reason. The Federal Circuit was right to overrule *Underwater Devices*, and it was right to establish a standard informed by this Court's precedent on willfulness and increased damages.

A. *Seagate* Implements The Willfulness Requirement By Applying An Established Recklessness Standard.

1. Relying on this Court's decisions in *Seymour*, *Aro II*, and *Dowling*, the *Seagate* court took the willfulness requirement for increased patent damages

---

[9] *See, e.g., Knorr-Bremse*, 383 F.3d at 1351 (Dyk, J., dissenting-in-part) (noting that "the due care requirement has fostered . a cottage industry of window-dressing legal opinions by third party counsel").

as a given. 497 F.3d at 1368. The question before the *en banc* Federal Circuit was whether to adhere to a regime that equated willfulness with mere negligence (*i.e.*, "duty of due care"), or whether to bring the willfulness requirement in patent law into harmony with willfulness in copyright and other civil law domains by requiring at least a showing of recklessness.

Seagate correctly took the latter course. The court noted that the "willfulness" required for increased statutory damages under the Copyright Act had "consistently been defined as including reckless behavior," *id.* at 1370 (citing cases),[10] and that a mere negligence standard for willfulness conflicted with the common understanding of the term in civil litigation and with this Court's punitive damages precedent, *id.* at 1370-71.

The Federal Circuit placed particular emphasis on this Court's decision in *Safeco*, 551 U.S. 47, which involved an analogous statutory scheme permitting the award of punitive damages for willful statutory violations. *Id.* at 53. In *Safeco*, this Court looked to "the traditional understanding of willfulness in the civil sphere" and held that a "willful" violation of the Fair Credit Reporting Act need not be a *knowing* violation—recklessness would also suffice. *Id.* at 59;

---

[10] In the companion case, Stryker makes much of the fact that increased damages are authorized for certain Lanham Act violations without a showing of willfulness. *See* Stryker Br. 21-22. But increased damages under the Lanham Act are compensatory by statutory definition, *see* 15 U.S.C. § 1117(a), and therefore the culpability of the defendant is irrelevant. Nevertheless, as Stryker acknowledges, increased damages for copyright infringement and certain trademark claims are only authorized upon a finding of willfulness, Stryker Br. 20-21, consistent with the *Seagate* approach.

see also id. at 57 ("This construction reflects common law usage, which treated actions in 'reckless disregard' of the law as 'willful' violations."). *Seagate* followed *Safeco*'s lead to conclude that the willfulness requirement for increased patent damages could be satisfied by a showing of recklessness.

To understand the contours of the recklessness standard, *Seagate* again looked to this Court. *See* 497 F.3d at 1371 (discussing *Farmer*, 511 U.S. 825). *Farmer* teaches that the "civil law generally calls a person reckless who acts . . . in the face of an unjustifiably high risk of harm that is either known or so obvious that it should be known." 511 U.S. at 836. This is the *Seagate* test. Enhancement is permissible when infringement is reckless under *Farmer*, and not otherwise. The "two-prong" approach associated with *Seagate* is simply the division of the civil law standard identified in *Farmer* into its two constituent elements for efficient, consistent application.

Recklessness has an objective component (the actual risk of harm) and a subjective component (the defendant's relevant knowledge). To avoid needless disputes over the discovery of privileged attorney-client communications—which would relate to the defendant's subjective knowledge of the risk—the *Seagate* court started with the objective inquiry. If there is no "unjustifiably high risk of harm," *i.e.*, an unjustifiably high risk that the defendant's conduct would violate the patent laws, there is no need to consider the defendant's subjective thought process. Infringement can justify a punitive enhancement only where the conduct was objectively likely to infringe a valid patent.

This Court could reassemble the two-part *Seagate* test and apply the *Farmer* standard directly, but

nothing of substance would change. The subjective and objective elements of *Seagate* necessarily flow from the common law recklessness standard.

2. *Seagate*'s application of a recklessness standard was appropriate in light of this Court's precedent. In *Milwaukee & St. Paul Railway v. Arms*, 91 U.S. 489, 493 (1876), for example, this Court explained that punitive damages were limited to cases where the wrongful act "was done wilfully, or was the result of that reckless indifference to the rights of others which is equivalent to an intentional violation of them." Likewise, *Safeco* noted that the "standard civil usage" treated "'reckless disregard' of the law as 'willful' violations." 551 U.S. at 57; *see also* Restatement (Second) of Torts § 908(2) (describing requirement that conduct be "outrageous, because of the defendant's evil motive or his reckless indifference to the rights of others").

Petitioners and the government each take issue with *Seagate*'s reliance on *Safeco*, but all of their concerns are misplaced.

First, Petitioners and the government argue that *Safeco*, which interpreted the term "willfully" in the Fair Credit Reporting Act, does not speak to the requirements for increased damages under Section 284. Halo Br. 23; Stryker Br. 45-46; US Br. 26-27. This argument is a red herring. *Seagate* does not look to *Safeco* for the willfulness requirement—that came from this Court's decisions in *Seymour*, *Aro II*, and *Dowling* and the history of Section 284 itself. Nor does *Safeco* even provide the definition of recklessness on which *Seagate* is based—that comes from *Farmer*. What *Safeco* persuasively teaches is that willfulness requires at a minimum a showing of recklessness under traditional common law

principles. There should not be any controversy on this point.

Second, Petitioners and the government emphasize that *Safeco* also allows willfulness to be shown by "knowing" misconduct. *E.g.*, Halo Br. 23. This much is true but irrelevant. As a logical matter, a defendant cannot *know* that his conduct violates the plaintiff's patent rights when the scope and validity of those rights is subject to reasonable dispute prior to resolution at trial. And as a practical matter, Halo cannot (and has not even attempted to) establish that Pulse *knew* it was infringing Halo's valid patent rights. Instead, the allegation all along has been that Pulse was reckless, and both the Federal Circuit and the district court rejected Halo's position. In short, Halo could not even show that Pulse was reckless, and it cannot possibly establish a "knowing" violation, which is a "more serious subcategory" of willfulness. *Safeco*, 551 U.S. at 59.

Finally, Petitioners and the government take issue with how *Seagate*'s objective prong permits the consideration of risk from the perspective of the reasonable person—without inquiring into the actual state of mind of the accused infringer. For example, under *Seagate*, infringement could not be reckless enough to support increased damages if every patent lawyer the defendant could consult would have told him with confidence that the patent in question is very likely invalid. (There simply would not be "an objectively high likelihood" that the act would "infringe[] . . . a valid patent." 497 F.3d at 1371.) But Petitioners and the government would demand to know whether the defendant *actually* consulted a lawyer, something that is now irrelevant under Section 298. If the infringer did not know about the specific invalidity defense at the time—no matter

how strong the defense might be—then in Petitioners' and the government's view, his conduct could not be objectively reasonable.

This approach is untenable. Most immediately, it guts recklessness of its objective component. Conduct is reckless when it involves an objectively high risk of harm, not when the actor misperceives the risk—thinking it may be high when it is objectively low—or simply fails to consider the risk one way or another. If two defendants stumble onto a questionable patent by engaging in identical activity, but only one calls a lawyer who tells him (the objective truth) that the patent is likely invalid, *neither* one has acted recklessly, and neither should be subject to increased damages.

The government's brief brings this problem sharply into focus. The government says that, given the "sophistication and ingenuity of the patent bar," lawyers "will generally be able to come up with plausible arguments that [a] patent is invalid or not infringed." US Br. 26 (quoting Lemley & Tangri, *Ending Patent Law's Willfulness Game*, 18 Berkeley Tech. L.J. 1085, 1092 (2003)). If this is true, one might be tempted to conclude that there should not be many cases in which increased damages are awarded, because there are few cases in which infringement is objectively obvious. *Cf. Carr*, 5 F. Cas. at 145 ("There can be rarely occasion for vindictive damages; because, almost invariably, the infringement arises out of some colorable claim of right, by the party sued."). But the government instead uses this premise to argue for a massive expansion of the cases in which increased damages will be available. In the government's view—and in a move that would resurrect in part the discredited *Underwater Devices* regime—the defendant who

actually calls an "ingenious" and "sophisticated" patent lawyer will escape treble damages, but the defendant who does not call such a lawyer (and perhaps cannot afford one) will not.

B. Halo Cannot Establish Willful Infringement Under Any Appropriate Test.

Although Halo's Petition focused solely on *Seagate*'s recklessness standard, its brief, like Stryker's, raises a number of other concerns with how *Seagate* is applied, including with respect to the standard of proof, the standards of appellate review, and the like. *E.g.*, Halo Br. 25-26. None of these details could change the result in this case, however, because Halo cannot establish willful infringement under any appropriate test.

The modern *Seagate* test may have its critics, but the lower courts have long held that honest doubts as to the validity of a patent preclude a finding of willfulness, and thus preclude increased damages. *See, e.g.*, *Guyon*, 1 Blatchf. at 246 (holding enhancement was not warranted where defendant "honestly supposed that [the patent] was void"); *Enter. Mfg. Co. v. Shakespeare Co.*, 141 F.2d 916, 921 (6th Cir. 1944) ("If honestly mistaken as to a reasonably debatable question of validity, an infringer should not be made to smart in punitive damages."); *Rockwood*, 37 F.2d at 66 (denying punitive damages where "validity of the patent and its infringement was open to honest doubt"); *Wilden Pump & Eng'g*, 655 F.2d at 989 ("Wilfulness is established only where it is shown that there was a deliberate purpose to infringe, and such a purpose is not found where the validity of the patent and any possible infringement is open to honest doubt." (quoting *Int'l Mfg. Co. v. Landon, Inc.*, 336 F.2d 723, 728 (9th Cir. 1964))). The reason for this consistent

thread in the cases is straightforward. There can be no willful violation of a known right where the existence of the right itself is unclear.[11]

In this case, there is no dispute that a Pulse engineer reviewed the patents promptly upon Pulse's receipt of Halo's 2002 letters referencing them. The engineer concluded that the patents were likely invalid in light of the prior art, which included Pulse's own products, and no further inquiry was made or required until five years later, when Halo actually accused Pulse of infringement by suing it. Pulse prevailed in establishing that most of the accused sales were not infringing at all, and it presented a strong invalidity defense built on the same principles that led the Pulse engineer to conclude years earlier that the patents were invalid. In these circumstances—under any reasonable standard for establishing willfulness, and regardless of the standard of proof—Pulse's conduct was not willful and did not justify a punitive award of increased damages.

Nevertheless, the clear and convincing standard of proof is well-justified. Where, as here, Congress has not prescribed a standard of proof, the courts must determine the appropriate standard. *See Steadman*

---

[11] *Commil USA, LLC v. Cisco Sys., Inc.*, 135 S. Ct. 1920 (2015), is not to the contrary. *Commil* held that an indirect infringer could not escape liability under 35 U.S.C. § 271(b) by establishing a good-faith belief in the invalidity of the patent, because Section 271(b) referred only to "infringement," which "is a different issue than validity." *Id.* at 1928. As Stryker concedes in the companion case, "[n]o such textual bar is presented here." Stryker Br. 40 n.10. For its part, Halo does not even mention *Commil*, much less argue that it bars consideration of the defendant's good-faith argument that a patent is invalid.

v. SEC, 450 U.S. 91, 95 (1981). In doing so, the courts ultimately make a policy decision regarding how best to "allocate the risk of error between the litigants and to indicate the relative importance attached to the ultimate decision." *Addington v. Texas*, 441 U.S. 418, 423 (1979). Although the baseline standard in civil litigation is generally a "preponderance of the evidence," there is an emerging consensus that punitive damages should be subject to a "clear and convincing" standard.[12] This consensus reflects the implicit and sound policy judgment—reflected in *Seagate* as well—that erroneously

---

[12] *See Pac. Mut. Life Ins. Co. v. Haslip*, 499 U.S. 1, 23 n.11 (1991) ("[T]here is much to be said in favor of a State's requiring, as many do, a standard of 'clear and convincing evidence' or, even, 'beyond a reasonable doubt'" (internal citation omitted)); *see also* Alaska Stat. § 09.17.020(b); *Hobart Corp. v. Scoggins*, 776 So. 2d 56, 58 (Ala. 2000) (per curiam); *Thompson v. Better-Bilt Aluminum Prods. Co.*, 832 P.2d 203, 210 (Ariz. 1992); Ark. Code Ann. § 16-55-207; Cal. Civil Code § 3294(a); *Jonathan Woodner Co. v. Breeden*, 665 A.2d 929, 938 (D.C. 1995); Fla. Stat. § 768.725; Ga. Code Ann. § 51-12-5.1(b); *Amfac, Inc. v. Waikiki Beachcomber Inv. Co.*, 839 P.2d 10, 37 (Haw. 1992); Idaho Code § 6-1604(1); Ind. Code § 34-51-3-2; *Reeves v. Carlson*, 969 P.2d 252, 313 (Kan. 1988); Ky. Rev. Stat. Ann. § 411.184(2); *Tuttle v. Raymond*, 494 A.2d 1353, 1354 (Me. 1985); *Owens-Ill., Inc. v. Zenobia*, 601 A.2d 633, 657 (Md. 1992); Minn. Stat. § 549.20(1)(a); Miss. Code Ann. § 11-1-65(1)(a); *Rodriguez v. Suzuki Motor Corp.*, 936 S.W.2d 104, 110 (Mo. 1996); Mont. Code Ann. § 27-1-221(5); Nev. Rev. Stat. § 42.005(1); N.J. Stat. Ann. § 2A:15-5.12(a); N.C. Gen. Stat. § 1D-15(b); N.D. Cent. Code § 32-03.2-11(1); *Cabe v. Lunich*, 640 N.E.2d 159, 164 (Ohio 1994); Okla. Stat. tit. 23, § 9.1(B); Or. Rev. Stat. § 31.730(1); S.C. Code Ann. § 15-33-135; S.D. Codified Laws § 21-1-4.1; *Hodges v. S.C. Toof & Co.*, 833 S.W.2d 896, 901 (Tenn. 1992); Tex. Civ. Prac. & Rem. Code § 41.003; Utah Code Ann. § 78-18-1(1)(a); *Wangen v. Ford Motor Co.*, 294 N.W.2d 437, 457-58 (Wis. 1980); *cf.* Colo. Rev. Stat. § 13-25-127(2) (beyond a reasonable doubt).

punishing conduct that is *not* culpable is worse than failing to punish conduct that is culpable. *Cf.* 4 Blackstone, *Commentaries* *358 ("[B]etter that ten guilty persons escape, than that one innocent suffer."). In contrast, in the context of compensatory damages, there is no *a priori* reason to err on the side of imposing the costs of harm on the plaintiff or on the defendant, particularly in light of society's "minimal concern with the outcome" of a purely monetary dispute between two parties. *Addington*, 441 U.S. at 423.

III. A STANDARD THAT LIMITS ENHANCEMENT TO KNOWING OR OBJECTIVELY OBVIOUS VIOLATIONS ADVANCES THE OVERARCHING POLICIES OF THE PATENT ACT.

As demonstrated above, and as virtually all parties and *amici* now agree, increased damages under Section 284 are punitive damages. Such damages, as this Court has held, are awarded not to compensate the plaintiff—particularly in patent cases, where the statute separately requires damages "adequate to compensate for the infringement"—but to promote the public interest by punishing, and thereby discouraging, socially undesirable conduct.

First, to serve that public interest, punitive damages must be predictable, so that future actors have notice of what specific conduct they are supposed to avoid. Second, punitive damages also must be narrowly targeted at and limited to conduct that truly is socially undesirable, so that their too-ready availability does not discourage conduct that actually furthers the public interest or encourage conduct that does not. An increased damages regime of the kind proposed by Petitioners and some of their *amici*—in which the objective strength of

infringement defenses is irrelevant if the defenses were not identified and developed at the first inkling of a potential claim, and in which increased damages are awarded based on an ambiguous "totality of the circumstances" standard—fails both of these fundamental tests. A willfulness standard that authorizes enhancement only for intentional or reckless violations, whether under the Federal Circuit's specific *Seagate* formulation or some variation, is essential to ensure that increased damages serve, and do not undermine, their intended purpose.

A. A Too-Lenient Standard For Increased Damages Will Chill, Not Promote, Innovation.

Petitioners and their *amici* maintain, correctly, that one purpose of the Patent Act is to promote innovation and invention. They err, however, in assuming that the Act pursues this goal at all costs or that expanding the availability of increased damages would actually advance this goal.

As this Court has long made clear, the statutory design is far more balanced. For example, the Court recently explained:

> Patent protection is, after all, a two-edged sword. On the one hand, the promise of exclusive rights provides monetary incentives that lead to creation, invention, and discovery. On the other hand, that very exclusivity can impede the flow of information that might permit, indeed spur, invention, by, for example, raising the price of using the patented ideas once created, requiring potential users to conduct costly and time-consuming searches of existing patents and

> pending patent applications, and requiring the negotiation of complex licensing arrangements.

Mayo Collaborative Servs. v. Prometheus Labs., Inc., 132 S. Ct. 1289, 1305 (2012). It is a core policy of federal patent law that the public "should be encouraged to pursue innovations, creations, and new ideas beyond the inventor's exclusive rights." *Festo Corp. v. Shoketsu Kinzoku Kogyo Kabushiki Co.*, 535 U.S. 722, 731 (2002).

Federal patent law therefore embodies "a careful balance" that recognizes "the need to promote innovation" by providing patent protection, while still facilitating the "imitation and refinement through imitation" that are "necessary to invention itself and the very lifeblood of a competitive economy." *Bonito Boats, Inc. v. Thunder Craft Boats, Inc.*, 489 U.S. 141, 146 (1989). This balance between "motivating innovation and enlightenment by rewarding invention with patent protection on the one hand, and the interest in avoiding monopolies that unnecessarily stifle competition on the other, has been a feature of the federal patent laws since their inception." *Pfaff v. Wells Elecs., Inc.*, 525 U.S. 55, 63 (1998).

The "delicate balance" reflected in the patent laws, *Festo Corp.*, 535 U.S. at 731, means that the public "has a paramount interest in seeing that patent monopolies . . . are kept within their legitimate scope." *Medtronic, Inc. v. Mirowski Family Ventures, LLC*, 134 S. Ct. 843, 851 (2014) (omission in original). To accomplish that goal requires that the public—in particular, those who compete with patent owners and thus have the incentive to challenge a patent's validity and sweep—be able to contest both the reach of a patent's claims, by offering products and services that come up to the patent's very edge, and whether

the patent should exist at all, by proceeding in the face of patents of dubious validity. The public, after all, is free to use anything not within the scope of the "clear notice" a patent's claims must provide. *Nautilus Inc. v. Biosig Instr., Inc.*, 134 S. Ct. 2120, 2129 (2014). And the public is not "required to pay tribute to would-be monopolists without need or justification." *Lear, Inc. v. Adkins*, 395 U.S. 653, 670 (1969).

These public interests are well served by requiring that increased damages be available only for conduct that is both subjectively culpable and objectively unjustified. Intentional or reckless infringement of plainly valid patents is, as Petitioners maintain, conduct that should be discouraged. Such conduct furthers no public interest and, if left unchecked, can undermine the incentives for invention that patents are supposed to provide.

But because "[p]atent law seeks to avoid the dangers of overprotection just as surely as it seeks to avoid the diminished incentive to invent that underprotection can threaten," *Lab. Corp. of Am. Holdings v. Metabolite Labs., Inc.*, 548 U.S. 124, 127 (2006) (Breyer, J. dissenting), an accused infringer's subjective state of mind cannot be the sole consideration. Rather, because the public interest requires that the limits and validity of patents be freely subject to challenge, an accused infringer's conduct must also be measured against an objective standard that considers the strength of the patent owner's claims of infringement and the strength of the defendant's defenses. The public interest is served when close questions as to patent scope and validity are raised and litigated, regardless of whether a particular accused infringer identified and addressed those questions when it first became aware

of the patent or only later. *See* 7 *Chisum on Patents* § 20.03[4][b][iii] (2009) (good faith challenges to patent scope and validity should be encouraged). As this Court recognized in *Octane*, the prospect of liability for treble damages can have a substantial chilling effect on conduct that serves the public interest. 134 S. Ct. at 1757.

A contrary rule—a rule that limits the inquiry only to defenses which the defendant fully developed at the outset—not only ignores the strong public interest in keeping patent monopolies "within their legitimate scope," *Medtronic*, 134 S. Ct. at 851, but also disregards practical realities. Modern sophisticated products can potentially implicate hundreds of patents, and companies that produce such products are routinely bombarded with demand letters, notices, licensing proposals, and the like.[13] A rule that required such companies, under threat of punitive damages, to drop what they are doing and launch full-blown analyses of patents they encounter or that are called to their attention by patent owners, often as in this case in entirely cursory and conclusory fashion, would be enormously inefficient and would divert massive resources from productive endeavors. As this case illustrates, a patent owner can send off notices or demands or licensing offers "very broadly and without prior investigation,"

---

[13] *See, e.g.*, *Commil*, 135 S. Ct. at 1930 (discussing rise of an industry in which patent owners send demand letters "very broadly and without prior investigation, assert[ing] vague claims of infringement," to extract payments); Askeladden Br. 17-18 (discussing demand letters in financial industry); Mark A. Lemley & Carl Shapiro, *Patent Holdup and Royalty Stacking*, 85 Tex. L. Rev. 1991, 1992 (2007) ("[M]odern products such as microprocessors, cell phones, or memory devices can easily be covered by dozens or even hundreds of different patents.").

Commil USA, LLP v. Cisco Sys., Inc., 135 S. Ct. 1920, 1930 (2015), and with no risk of adverse consequences from an unfounded assertion.[14] The situation is very different for the recipient, if the failure immediately to identify and develop all potential defenses exposes it to the risk of punitive damages. Under such a regime, mere notice of a potentially applicable patent would require that the target of a notice identify and develop today every defense that it might later raise in the event of litigation. "[C]ostly and time-consuming searches of existing patents," *Mayo Collaborative*, 132 S. Ct. at 1305, and procuring opinions of counsel regarding non-infringement and invalidity at a cost of as much as $100,000 each (Public Knowledge Br. 9; Licensing Execs. Br. 19) may benefit the patent bar, but no one else.[15]

An objective standard based on the issues actually litigated avoids such inefficient, wasteful activity and preserves for the public the benefit of robust inquiry concerning patent scope and validity. It also promotes the deterrent function of punitive damages by enhancing predictability. The "totality of the circumstances" approach advocated by Petitioners and some *amici* would lead to utterly unpredictable and inconsistent outcomes and unintended consequences, resulting in no guidance at all regarding

---

[14] This case is hardly the only, or the worst, example of such patent owner tactics. *Amicus* Public Knowledge cites a patent owner that sent more than 16,000 such notices in a two-year period. Public Knowledge Br. 26-27; *see also* Askeladden Br. 17-18, 24-25.

[15] To the extent that a relaxation of the willfulness standard resurrected the cottage industry in counsel opinions that had developed in the pre-*Seagate* era, it also would conflict with Congress's intent as reflected in 35 U.S.C. § 298.

what conduct is or is not subject to punishment. Such lack of guidance would undermine the primary justification for a punitive remedy like increased damages, *see Exxon*, 554 U.S. at 502 (to be effective, "a penalty should be reasonably predictable"), and would inevitably deter challenges to patent scope and validity that would advance the public interest. A standard that bases the award of increased damages on the objective merit of defenses presented in the litigation avoids those problems by ensuring that a clear, fully-litigated record is available to the public, and by making Federal Circuit review—under whatever standard—more meaningful as a guide to others.

B. A Too-Lenient Standard For Increased Damages Will Foster The Abusive Use Of Patents And Reintroduce Wasteful Practices Prevalent Before *Seagate*.

An expansion of increased damages would not only discourage conduct that serves the public interest, it would encourage conduct that does not. This is because patents today do not serve solely to protect and provide incentives for inventors, but have become, in many cases, instruments of extortion and financial speculation, directly and indirectly diverting resources from productive endeavors.

The Court is well aware of the rise of so-called non-practicing entities ("NPEs"), colloquially called "patent trolls." These firms use patents not to protect their inventive efforts—for they engage in none—but "primarily for obtaining licensing fees" from firms that actually provide goods and services to the public. *Commil*, 135 S. Ct. at 1930. These NPEs seek, as the Court has observed, "to obtain payments that are based more on the costs of defending litigation than on the merit of the patent claims." *Id.* Such entities

already wield significant leverage, particularly over younger, emergent firms, because of the high cost of patent litigation and the risk that a judge or jury in a plaintiff-friendly forum—where NPEs typically file their suits—might assess substantial compensatory damages.[16] That leverage often produces settlements that siphon funds from productive activities and increase prices to consumers, while leaving dubious patents untested. Providing an unbridled standard for increasing damages would only increase the threat posed by such NPEs, and the resulting diversion of productive resources and harm to consumer welfare, by "multiply[ing] the opportunities for holders of invalid patents to exact licensing agreements." *Blonder-Tongue Labs., Inc. v. Univ. of Ill. Found.*, 402 U.S. 313, 342 (1971).

If that were a necessary cost of deterring piracy and wanton misconduct, it might be a cost worth bearing, but that is not the case. Although Petitioners and their *amici* paint a picture of rampant deliberate infringement by unprincipled corporate predators, the reality is very different. Allegations of outright copying of patented inventions are extremely rare, and findings that copying actually occurred are rarer still. *See* Public Knowledge Br. 29. Patent litigation is enormously expensive, and no business, no matter how large and successful, can afford to incur that expense where it can be avoided. Beyond the litigation expense, the risk of large compensatory awards and injunctions provides more than sufficient incentive to respect legitimate patent rights—in a competitive global marketplace, rational businesses

---

[16] As several *amici* note, NPEs disproportionately target smaller companies, and the Eastern District of Texas has become the forum of choice for NPE suits. *See, e.g.*, Public Knowledge Br. 7 n.4, 14-15.

do not invest in and launch products where there is a significant risk that they will be ordered to share the returns on their investments with third-party patent owners or, worse still, stop selling those products altogether. Petitioners' call for a sweeping expansion of increased damages is a solution to a problem that does not exist, but their proposal will make worse a problem (patent trolls) this Court has determined does exist.[17]

IV. NEITHER A WILLFUL INFRINGEMENT REQUIREMENT IN GENERAL, NOR THE SPECIFIC STANDARD APPLIED BY THE FEDERAL CIRCUIT, IS INCONSISTENT WITH THE COURT'S DECISIONS IN *OCTANE* AND *HIGHMARK*.

Petitioners and the government argue that *Seagate* conflicts with this Court's decisions in *Octane* and *Highmark*. But those decisions do not address increased damages or willful infringement, and they interpret a statute that has a vastly different history, purpose, and meaning than Section 284.

Octane concerned the interpretation of Section 285's "exceptional case" standard for the award of attorneys' fees. The Federal Circuit had imported the "sham litigation" exception to *Noerr-Pennington* antitrust immunity to hold that, absent specific misconduct, attorneys' fees under Section 285 may not be recovered from the patentee unless the suit was brought in subjective bad faith and was objectively baseless. *See Brooks Furniture Mfg., Inc. v. Dutailier Int'l, Inc.*, 393 F.3d 1379, 1382 (Fed. Cir.

---

[17] Petitioners' assertion that increased damages have become virtually unavailable since *Seagate* is incorrect. Where infringement is truly willful, increased damages are awarded. *See* Public Knowledge Br. 28.

2005). Unlike the willfulness requirement for increased damages, the *Brooks Furniture* rule was a recent innovation without any basis in statutory history or the decisions of this Court or the lower courts. *See Octane*, 134 S. Ct. at 1754 ("In 2005 . . . the Federal Circuit abandoned [its prior approach] in favor of [the *Brooks Furniture* rule].").

Octane does not conflict with *Seagate*. On the one hand, *Octane* does not purport to address Section 284 or its willfulness requirement in any way. And on the other hand, *Seagate* is not based on the sham litigation exception to *Noerr-Pennington* immunity, and it has nothing to do with the *Brooks Furniture* rule.

Similarly, *Highmark* does not militate against *Seagate* or the willfulness requirement. *Highmark* concerned the standard of appellate review for the discretionary decision whether to award attorneys' fees under Section 285. As *Highmark* recognized, the standard for appellate review for attorneys' fee determinations under Section 285 flowed directly from the discretionary nature of those determinations. *Highmark* sheds no light on the standard of review that should apply to the very different punitive damages decision under Section 284. In any event, because Pulse prevailed in the district court on willfulness, the standard of review is irrelevant in this case.

Sections 284 and 285 may be adjacent to one another in the U.S. Code as a matter of happenstance, but they have very little to do with one another. For one thing, Section 284 has a history that traces back to the 1836 Patent Act, with a consistent line of cases supporting the willfulness requirement that forms the backbone of the Federal Circuit standard. In contrast, the first time any fee-

shifting provision appeared in the Patent Act was in 1946, and the "exceptional case" standard at issue in *Octane* was not introduced until 1952. *Octane*, 134 S. Ct. at 1756. And as this Court explained in *Octane*, *Brooks Furniture* was not an application of a long-established rule—it was an abandonment of the standard that had been applied by the Federal Circuit (and the regional courts of appeals before it) for decades. *Id.* at 1754.

The two statutes also have different purposes. As discussed, Section 284 authorizes increased damages to punish and deter willful acts of patent infringement. In this respect, it is a one-sided, punitive statute with ancient roots in tort law, and it can be invoked only by the patentee. Section 285 has nothing to do with the culpability of the infringer's conduct, and it is not at all one-sided. Instead, the statute is designed to shift the costs of litigation (contrary to the normal "American rule") based on a party's exceptionally weak "litigating position" or "the unreasonable manner in which the case was litigated." *Id.* at 1756. As a cost-shifting provision, Section 285 is inherently compensatory, and it is available to patent owners and accused infringers alike.

Moreover, the policy considerations that militated in favor of the results in *Octane* and *Highmark* point to preserving the willfulness requirement in this case. One of the important consequences of the *Octane* rule was that—because it applied to all parties—it served to check (or at least not to encourage) the efforts of NPEs to extract unjustified settlements. And there was no substantial risk that adopting a particular rule for fee-shifting based on litigation conduct would interfere with innovation on the ground. But in this case, departing from the

established willfulness requirement will serve only the interests of patent owners, who will use the *in terrorem* effect of treble damages to demand ever higher royalties regardless of "the merit of the patent claims," *Commil*, 135 S. Ct. at 1930, increasing the cost of products and services provided to the public and reducing innovation.

Octane and *Highmark* are part of a line of this Court's recent cases in the patent domain, including *eBay Inc. v. MercExchange, L.L.C.*, 547 U.S. 388 (2006), and *KSR International Co. v. Teleflex Inc.*, 127 S. Ct. 1727 (2007), in which the Court has rejected a Federal Circuit innovation in patent law that imposed rigid requirements having no basis in the statute or historical precedent.

Seagate is different. Like the "clear and convincing" standard of proof for obviousness affirmed by this Court in *Microsoft*, 131 S. Ct. 2238, the willfulness requirement has a long history in this Court's cases, and it has survived (and indeed informed) many of Congress's amendments to the Patent Act. *Seagate* appropriately implements the willfulness requirement based on established common law standards and should be reaffirmed. But even if the Court were to modify *Seagate*, Halo still would not be entitled to increased damages under any reasonable application of the willfulness requirement.

CONCLUSION

For the foregoing reasons, the judgment of the court of appeals should be affirmed.

Respectfully submitted,

CARTER G. PHILLIPS
SIDLEY AUSTIN LLP
1501 K Street, N.W.
Washington, D.C. 20005
(202) 736-8000

CONSTANTINE L. TRELA, JR.
STEVEN J. HOROWITZ
SIDLEY AUSTIN LLP
One South Dearborn
Chicago, IL 60603
(312) 853-7000

MARK L. HOGGE*
VICTOR H. BOYAJIAN
SHAILENDRA K. MAHESHWARI
CHARLES R. BRUTON
RAJESH C. NORONHA
DENTONS US LLP
1900 K Street, N.W.
Washington, DC 20006
(202) 496-7500
mark.hogge@dentons.com

Counsel for Respondents
* Counsel of Record

January 13, 2016

Supreme Court, U
FILED
FEB 12 20
OFFICE OF THE CL

No. 14-1513

In the Supreme Court of the United States

HALO ELECTRONICS, INC.,

Petitioner,

v.

PULSE ELECTRONICS, INC.,
PULSE ELECTRONICS CORPORATION,

Respondents.

On Writ of Certiorari to the United States Court of Appeals for the Federal Circuit

REPLY BRIEF FOR PETITIONER

CRAIG E. COUNTRYMAN
Counsel of Record
Fish & Richardson P.C.
12390 El Camino Real
San Diego, CA 92130
(858) 678-5070
countryman@fr.com

MICHAEL J. KANE
WILLIAM R. WOODFORD
JOHN A. DRAGSETH
Fish & Richardson P.C.
3200 RBC Plaza
60 South Sixth Street
Minneapolis, MN 55402
(612) 335-5070

Counsel for Petitioner Halo Electronics, Inc.

TABLE OF CONTENTS

Page

INTRODUCTION 1

ARGUMENT 2

I. Section 284 Provides Discretion to Enhance Damages in Egregious Circumstances, Even If There Is a Non-Sham Defense 2

A. The "Willful" Label Is Not a Prerequisite for Enhancement. 2

B. Even Decisions Addressing "Willful" or "Wanton" Infringement Did Not Impose *Seagate*'s Rigid, Two-Part Test. 5

C. No Authority Supports the Federal Circuit's Additional "Any-Defense-at-Any-Time" Approach. 11

D. *Seagate* is Wrong Even If Enhancement Has "Punitive" Purposes. 13

II. Allowing District Courts to Balance All Relevant Facts is Sound Policy. 15

III. Vacatur is Necessary to Permit the District Court to Reconsider Enhancement. 20

CONCLUSION 22

TABLE OF AUTHORITIES

Page(s)

Cases

Aro Mfg. Co. v. Convertible Top Replacement Co.,
377 U.S. 476 (1964) 3, 7

B.F. Goodrich v. Consolidated Rubber Tire Co.,
251 F. 617 (7th Cir. 1918) 8, 9

Baumstimler v. Rankin,
677 F. 2d 1061 (5th Cir. 1982) 8

Brodie v. Ophir Silver Mining Co.,
4 F. Cas. 202 (C.C.D. Cal. 1867) 9

Buerk v Imhaeuser,
4 F. Cas. 594 (C.C.S.D.N.Y. 1876) 9

Carr v. Rice,
5 F. Cas. 140 (C.C.S.D.N.Y. 1856) 9

Consolidated Rubber Tire Co. v. Diamond Rubber Co.,
226 F. 455 (S.D.N.Y. 1915) 7

Corning v. Burden,
56 U.S. 252 (1854) 5

Day v. Woodworth,
54 U.S. 363 (1851) 13

Dean v. Mason,
61 U.S. 198 (1858) 2

Dowling v. United States,
473 U.S. 207 (1985) 3

Eltra Corp. v. Basic, Inc.,
599 F.2d 745 (6th Cir. 1979) 8

Exxon Shipping Co. v. Baker,
554 U.S. 471 (2008) 14

Garcia v. United States,
469 U.S. 70 (1984) 4

Guyon v. Serrell,
1 Blatchf. 244, 246 (C.C.S.D.N.Y.
1847) 9

Hogg v. Emerson,
52 U.S. 587 (1850) 5

Jurgens v. CBK, Ltd.,
80 F.3d 1566 (Fed. Cir. 1996) 4

Livingston v. Woodworth,
56 U.S. 546 (1853) 5

Mayo Collaborative Servs. v.
Prometheus Labs., Inc.,
132 S. Ct. 1289 (2012) 15

Milwaukee & St. Paul Railway v. Arms,
91 U.S. 489 (1876) 14

Read Corp. v. Portec,
Inc., 970 F.2d 816 (Fed. Cir. 1992) 15, 18

Safeco Ins. Co. v. Burr,
551 U.S. 47 (2007) 2, 10, 11

Seymour v. McCormick,
57 U.S. 480 (1854) 3, 19

Teese v. Huntingdon,
64 U.S. 2 (1860) 13

Tilghman v. Proctor,
125 U.S. 136 (1888) 2

Topliff v. Topliff,
145 U.S. 156 (1892) 3, 6

Union Carbide Corp. v. Graver Tank & Mfg. Co.,
282 F.2d 653 (7th Cir. 1960) 8

United States v. Price,
361 U.S. 304 (1960) 10

United States v. Illinois Cent. R.R. Co.,
303 U.S. 239 6

Wilden Pump & Eng'g Co. v. Pressed and Welded Prods. Co.,
655 F.2d 984 (9th Cir. 1981) 8

Statutes

35 U.S.C. § 271(a) 20

35 U.S.C. § 284 ..... *passim*

35 U.S.C. § 285 ..... 1, 12

35 U.S.C. § 298 ..... 4, 5

Legislative History

S. Rep. No. 79-1503 (1946) 16

Other Authorities

Recovery in Patent Infringement Suits: Hearing on H.R. 5231 Before the H. Comm. on Patents, 79th Cong. 3, 15 (1946) 13

RESTATEMENT (SECOND) OF TORTS 14

RESTATEMENT (THIRD) OF TORTS: PHYS. & EMOT. HARM (2010) 10, 11

Albert H. Walker, THE PATENT LAWS OF THE UNITED STATES OF AMERICA (2d ed. 1889) 6, 13

INTRODUCTION

Pulse's response focuses on labels like "willful" and "punitive" to justify the *Seagate* standard. But the fact remains that Pulse's conduct—by whatever label—exemplifies the level of culpability that has historically merited enhancement. Pulse learned of Halo's patents in 1998 and copied them without deciding it had any legal basis to do so. Pulse received two letters from Halo but ignored them. A Pulse engineer testified at trial about an alleged investigation in 2002 (years after the copying began), but Pulse admitted it was "cursory" and never relied upon. The jury thus found that Pulse acted in subjective bad faith, with a belief that the patent was infringed and valid.

Pulse's conduct makes this what the United States describes (at 18) as the "paradigmatic" case for enhancement under this Court's precedent. But the district court could not consider enhancement because, under *Seagate* and its progeny, it found that Pulse's trial defense was not objectively baseless or a sham. No case from this Court, however, required that the infringer's conduct be objectively baseless, much less judged a defendant based on facts that were not before it at the relevant time. Precedent focused instead on the defendant's subjective beliefs and acts at the time, and made "bad faith" infringement a separate category of enhancement. Punitive damages law is in accord, permitting punishment for intentional bad acts like Pulse's.

So Pulse's labels provide no basis to ignore the statutory text or this Court's criticism in *Octane* of the Federal Circuit's similarly-rigid test for § 285. District courts should thus have discretion to consider and balance all the relevant facts in deciding whether the enhance damages under § 284.

ARGUMENT

I. Section 284 Provides Discretion to Enhance Damages in Egregious Circumstances, Even If There Is a Non-Sham Defense.

A. The "Willful" Label Is Not a Prerequisite for Enhancement.

The core of Pulse's response subjugates the statutory text to its history, and then misstates that history. Pulse focuses on the "willful" label because, without it, there would be no basis for the rigid two-part test that the Federal Circuit purported to borrow from *Safeco*. Halo agrees that the statute should be interpreted consistently with its history. But historically, courts flexibly considered all the relevant facts without a rule that any particular fact would have determinative weight in all cases.

1. Both pre- and post-1952 precedent from this Court and others broadly permitted enhancement for various kinds of culpable conduct beyond mere negligence, without imposing any single formulation or bright-line limitation. *See, e.g., Dean v. Mason*, 61 U.S. 198, 203 (1858). Enhancement was appropriate, instead, "whenever the circumstances of the case appear to require it." *Tilghman v. Proctor*, 125 U.S. 136, 143-44 (1888). For example, this Court would have enhanced where an infringer who worked for the patentee opened up a rival infringing business and took away customers, *Topliff v. Topliff*, 145 U.S. 156, 174 (1892), even though the validity of one patent was "by no means free from doubt," *id.* at 164, and the other patent had prior art that "approached very near the

[same] idea" and "might, by a slight modification" be used to make the invention. *Id.* at 161.*

The cases Pulse cites simply distinguished between the guilty "wanton and malicious pirate" and the innocent "defendant who acted in ignorance or good faith," but none said that ***only*** "wanton" or "willful" infringement could trigger enhancement. *Seymour v. McCormick*, 57 U.S. 480, 488 (1854); *see also Aro Mfg. Co. v. Convertible Top Replacement Co.*, 377 U.S. 476, 508 (1964); *Dowling v. United States*, 473 U.S. 207, 227 n. 19 (1985). Indeed, *Seymour* stressed that enhancement was "committed to the discretion and judgment of the court." *See* 57 U.S. at 488-89. And *Aro* noted, using open alternative language, that enhancement can be based on "willful ***or*** bad-faith infringement." 377 U.S. at 508 (emphasis added). Pulse's cases only show that "willful" infringement is a notable, but not exclusive, enhancement factor.

Any lower court decisions that limit enhancement to "wanton" infringement, of course, cannot trump this Court's broader pronouncements. The regional circuits used various labels to identify culpable conduct, and some decisions explicitly declined to make "willful" infringement a prerequisite to enhancement. *See* Halo Br. at 16 n.‡ (collecting cases). That persistent circuit split further demonstrates that this Court's precedent did not make "willfulness" a prerequisite to enhancement. It also shows that Congress could not have ratified a "willfulness" constraint on the otherwise flexible statutory text.

---

* Pulse cannot distinguish *Topliff* simply because it involved two patents. The validity of both patents was dubious, and the Court did not limit its comment in any way, suggesting it applied equally to both.

2. Pulse gets no help (at 21-25) from the legislative history of *other* statutes. One Senator's comments on the 1992 Patent and Plant Variety Protection Remedy Clarification Act are of little use because the courts have "eschewed reliance on the passing comments of one member." *Garcia v. United States*, 469 U.S. 70, 76 (1984). Statements in a 1997 Committee Report on a bill involving remedies for provisional patent infringement were unexplained stray comments made years after the 1952 Patent Act enacted the enhanced damages provision of § 284 and are irrelevant to what the prior Congress intended. *See, e.g., United States v. Price*, 361 U.S. 304, 313 (1960) ("[T]he views of a subsequent Congress form a hazardous basis for inferring the intent of an earlier one."). Moreover, that bill simply provided that enhanced damages were not available for the period before a patent issues—it did not attempt to address the appropriate standard for enhancement for infringement after the patent had issued. At most, the Committee's comments simply reflected that the Federal Circuit had by then made "willfulness" a prerequisite to enhancement in *Jurgens v. CBK, Ltd.*, 80 F.3d 1566, 1570 (Fed. Cir. 1996), but do not show Congress endorsing or ratifying that pronouncement.

Likewise, the discussion by individual Senators of provisions that were not incorporated into the 2011 America Invents Act shed no light on the proper standard for enhancement, because there is no evidence of why Congress, as a whole, declined to enact those provisions. *See, e.g., Price*, 361 U.S. at 310-11 (1960) ("[N]on-action by Congress affords the most dubious foundation for drawing positive inferences.").

Pulse's reliance on the newly-enacted 35 U.S.C. § 298 also fails to prove that willfulness is the only

prerequisite to enhancing damages. Pulse admits (at 25) that § 298's "text" is "consistent" with "a regime that treats willfulness as sufficient but not necessary to authorize increased damages," and Halo agrees. The other legislative history is ambiguous, because Congress's refusal to codify the *Seagate* standard equally signals the dissatisfaction of some members with it. So § 298 does not abrogate either the flexible text of § 284 or this Court's precedent that permits enhancement for other purposes.

B. Even Decisions Addressing "Willful" or "Wanton" Infringement Did Not Impose *Seagate*'s Rigid, Two-Part Test.

Although courts used a variety of labels for culpable conduct (*e.g.* "wanton," "malicious," "willful," or "bad faith" infringement), none imposed anything like *Seagate*'s two-part objective/subjective requirement. These decisions instead hold only that enhancement for punitive purposes must be based on culpable conduct beyond mere negligence or accident.

1. Courts before *Seagate* considered all relevant facts, focusing particularly on each defendant's subjective acts and knowledge. For example, although infringement can be a strict liability tort, an infringer that did not know about the patent pre-suit could not be subject to trebling—accidental infringement does not suffice. *Hogg v. Emerson*, 52 U.S. 587, 607 (1850). Likewise, an infringer's contemporaneous good faith beliefs and actions were balanced against other evidence of bad faith in determining whether to enhance. *Livingston v. Woodworth*, 56 U.S. 546, 560 (1853) (enhancement not appropriate where the infringer was acting under the subjective belief that its conduct was protected by another patent, but then immediately consented to an injunction and damages once it

learned it was wrong); *Corning v. Burden*, 56 U.S. 252, 271 (1854) (holding an infringer could introduce evidence of its own patent to show that "his machine is new, and not an infringement" and noting that it showed, at a minimum, the infringer's "good faith"). No decision superimposed a requirement that the infringer's position must be objectively baseless before enhancement can even be considered. In fact, *Topliff* demonstrates that enhancement can be appropriate when other evidence of bad faith (copying, stealing customers) outweighs the closeness of the case.

Consistent with this precedent, a contemporaneous treatise recognized that an infringer whose conduct was beyond mere negligence could be subject to enhancement. *See* Albert H. Walker, TEXTBOOK OF THE PATENT LAWS OF THE UNITED STATES OF AMERICA § 567 (2d ed. 1889) (explaining that enhancement "will be exercised where the defendant's infringement was deliberate and intentional, even though it may have been committed under an erroneous opinion of the plaintiff's rights"). The key was to balance all the facts. Bad faith behavior like copying and targeting the patentee's customers might outweigh mitigating circumstances like the existence of a defense. *See* United States Br. at 19 n.15 (collecting examples). So "willfulness" was just a shorthand for any conduct that exceeded mere negligence, consistently with how this Court sometimes used it in other civil contexts. *See, e.g., United States v. Illinois Cent. R.R. Co.*, 303 U.S. 239, 242-43 (explaining that "willfully" "often denotes that which is intentional, or knowing, or voluntary, as distinguished from the accidental"). The United States ably explains (at 27-28) how "'willful' and its variants [were used] to refer to a range of egregious bad-faith and morally blameworthy conduct that especially deserved punishment."

Lower court decisions also enhanced when an infringer's culpable conduct exceeded mere negligence and outweighed the fact that it posed a colorable defense. The best of those decisions eschewed legal labels and focused on the facts at bar—Judge Learned Hand put it succinctly: "'Wanton' is somewhat a word of rhetoric. I do not know just what the decisions mean when they use it; but the facts are as follows...." *Consolidated Rubber Tire Co. v. Diamond Rubber Co.*, 226 F. 455, 463 (S.D.N.Y. 1915), *aff'd* 232 F. 475 (2d Cir. 1916). He proceeded to enhance, explaining that, although the infringer presented a defense that it sincerely "hoped might prove effective," this was not dispositive because "it is not necessary that an infringer should absolutely know that he has no rights." *Id.* at 465. The infringer's behavior was "certainly an evasion," regardless of "whether or not it could eventually be defended." *Id.* In addition, the infringer had concealed evidence and engaged in "deviousness throughout ... its persistent effort to suck the value from the invention." *Id.* So Judge Hand enhanced in a sum "which should be enough to pay the costs of the litigation and give the plaintiffs smart money." *Id.* His reasoning thus endorsed enhancement where the infringer was more than just negligent yet might have had a colorable trial defense.

2. This Court has also made clear that an infringer's "bad faith" conduct can justify enhancement independently of any inquiry into objective recklessness. *See, e.g., Aro Mfg. Co. v. Convertible Top Replacement Co.*, 377 U.S. 476, 508 (1964) ("[I]t could in a case of willful ***or*** bad-faith infringement recover punitive or 'increased' damages under the statute's trebling provision.") (emphasis added). Many of Pulse's cited cases are consistent with this approach, because

they focus on what the infringer subjectively believed and did, not on any abstract objective inquiry.

For example, the regional circuits that used the "willfulness" label affirmed denials of enhanced damages where the infringer had actually investigated and relied upon a defense before it began infringing. *See Eltra Corp. v. Basic, Inc.*, 599 F.2d 745, 757 (6th Cir. 1979) (infringer stopped paying royalties after learning another competitor thought the patent was invalid, and then promptly obtained and relied upon its own legal opinion); *Union Carbide Corp. v. Graver Tank & Mfg. Co.*, 282 F.2d 653, 675 (7th Cir. 1960) (infringer obtained and relied upon legal guidance before it started selling its product); *Wilden Pump & Eng'g Co. v. Pressed and Welded Prods. Co.*, 655 F.2d 984, 989 (9th Cir. 1981) (same); *Baumstimler v. Rankin*, 677 F. 2d 1061, 1073 (5th Cir. 1982) (infringer actually knew about close prior art).

Even then, the fact an infringer presented a strong trial defense was not a *per se* bar to enhancement. For example, although *Baumstimler* remarked that a court "should be *more reluctant* to impose punitive damages" if validity is "close and litigated in good faith," it did not hold that enhancement was off limits in such a case. 677 F.2d at 1073. The Court instead remanded for a new trial (due to errors on other issues), while leaving open the possibility of enhancement, even where validity there was "certainly ... close." *Id.* If the presence of a defense were a *per se* bar (as Pulse argues), then *Baumstimler* would not have remanded the willfulness issue for further consideration. Instead, *Baumstimler* left it to the district court to balance all the relevant facts.

Likewise, *B.F. Goodrich v. Consolidated Rubber Tire Co.*, 251 F. 617 (7th Cir. 1918), affirmed a denial

of enhancement where the circuits had been split on a patent's validity but added that "[w]e are not willing to announce any hard and fast rule that good faith exists because a favorable decision in some court is obtained," and cited Judge Hand's enhancement decision against a different infringer on the same patent with approval. *Id.* at 625. If the Seventh Circuit was unwilling to categorically prohibit enhancement even where another circuit had *actually invalidated* the patent, then it certainly did not equate "willfulness" with a standard that would preclude enhancement as long as there were any non-sham defense.

Pulse's cited district court decisions are to the same effect—most focused on an infringer's actual beliefs and actions when it infringed. *See Brodie v. Ophir Silver Mining Co.*, 4 F. Cas. 202, 203-04 (C.C.D. Cal. 1867) (no enhancement where the infringer stopped infringing after learning of the patent); *Buerk v. Imhaeuser*, 4 F. Cas. 594, 595 (C.C.S.D.N.Y. 1876) (no enhancement where the infringer was manufacturing under its own patent and thus believed its conduct lawful); *Guyon v. Serrell*, 1 Blatchf. 244, 246 (C.C.S.D.N.Y. 1847) (no enhancement after balancing evidence undermining good faith with the fact that an error in the patent may have misled the infringers and they stopped infringing before the suit). Another was a passing comment in a jury instruction in a case that did not actually involve enhancement and where, in any event, the defendant held a good faith belief. *Carr v. Rice*, 5 F. Cas. 140, 145 (C.C.S.D.N.Y. 1856). The other opinions are too cryptic to show what the parties actually argued or the basis for the court's decision. Importantly, none held that an infringer who acted in subjective bad faith could avoid enhancement by pointing to a defense that it had not actually relied upon at the time it was infringing.

3. Lacking support in the *facts* of prior cases, Pulse instead extracts the "willfulness" label and pairs it with the particular test for a "willful" violation of the Fair Credit Reporting Act articulated in *Safeco Ins. Co. v. Burr*, 551 U.S. 47 (2007), which in turn cited *Farmer v. Brennan*, 511 U.S. 825 (1994). But *Safeco* acknowledged that "'willfully' is a word of many meanings whose construction is often dependent on the context in which it appears." 511 U.S. at 57. And, in the context of § 284 and its predecessors, prior decisions have used it to connote any culpable conduct that rises above mere negligence, not only objective recklessness. *Safeco* itself is in accord, remarking that "we have generally taken it to cover not only knowing violations of a standard, but reckless ones as well." *Id.* So is *Farmer*, which dealt only with the standard for "deliberate indifference" violations of the Eighth Amendment, without addressing the standards for knowing or purposeful violations. *See* 511 U.S. at 834-35.

Pulse acknowledges (at 37) that "knowing" misconduct is independently willful, and, under traditional tort principles, that was true even if there was a chance the harm might not have materialized. *See* RESTATEMENT (THIRD) OF TORTS: PHYS. & EMOT. HARM § 1, Cmt. (2010) ("A purpose to cause harm makes the harm intentional *even if harm is not substantially certain to occur*." (emphasis added)). This makes perfect sense. If an infringer like Pulse knows that a patent was infringed and valid because, as here, it copied the patented design and had taught away from it while trying and failing many other solutions to the problem, then it intended to cause harm and should be punished. There is always a chance that it might not succeed in inflicting the intended harm, but that does not excuse its conduct. District courts should still

have discretion to deter intentionally inflicted harm by enhancing damages.

C. No Authority Supports the Federal Circuit's Additional "Any-Defense-at-Any-Time" Approach.

1. The Federal Circuit has compounded *Seagate*'s error by holding that the "objective" prong is to be assessed based not on the facts the infringer actually faced at the time, but on any new defense that emerges years after the initial wrongful act. The upshot is that an infringer who acts in bad faith for years can nevertheless escape enhancement if it later develops a non-sham defense. No cases before *Seagate* and its progeny authorized that approach. As demonstrated previously, all the precedent from this Court, the regional circuits, and the district courts involved an infringer that actually relied on a defense when it acted. None addressed a situation where the infringer copied without a good-faith basis for doing so, but then escaped enhancement because of an unsuccessful trial defense developed more than a decade later. Indeed, even *Safeco*, which was the basis for the Federal Circuit's "objective" prong, looked only to the defense the defendant actually relied upon at the time in determining whether its actions were objectively baseless. *Safeco*, 551 U.S. at 70 n.20.

Traditional tort principles require analyzing recklessness based on the facts and circumstances that then faced the defendant. *See, e.g.*, Restatement (Third) of Torts: Phys. & Emot. Harm, § 2 (2010) ("A person acts recklessly in engaging in conduct if: (a) the person knows of the risk of harm created by the conduct or knows facts that *make the risk obvious to another in the person's situation*, and (b) the precaution

that would eliminate or reduce the risk involves burdens that are so slight relative to the magnitude of the risk as to render the person's failure to adopt the precaution a demonstration of the person's indifference to the risk.").

There is good reason to analyze an infringer's culpability based on the facts and circumstances it faced at the time. If an infringer copies the patent, steals the patentee's customers, and forces the patentee to sue by ignoring the patentee's pre-suit warnings, then a district court should have discretion to enhance, even if the infringer might have devised an eleventh-hour, non-frivolous justification. The infringer's bad conduct is something courts ought to deter. But if an infringer knows it can avoid enhancement, because it can hire a lawyer later to develop a non-frivolous defense, then it has nothing to lose from copying.

2. The United States cogently explains why the any-defense-at-any-time safe harbor lacks support and makes no sense. No such limitation appears in the statute, or appeared in predecessor statutes or decisions. As the United States notes (at 25): "the courts in construing those provisions overwhelmingly focused on the infringer's conduct and state of mind *at the time of infringement*." And as importantly, the United States shows (at 25) how such an any-defense-at-any-time approach "insulat[es] from enhanced-damages liability a significant class of misconduct that is properly viewed as particularly egregious." The Federal Circuit provided no authority or rationale when it added this extra rule. Worse yet, the United States demonstrates (at 29) that the Federal Circuit's rule conflicts with other areas of law, where a party's conduct is judged based on a "time-of-action" analysis. The rule in patent law should be no different.

D. *Seagate* is Wrong Even If Enhancement Has "Punitive" Purposes.

Pulse spends much time arguing that § 284 is only punitive, in an effort to distance this case from the text of § 284 and from *Octane*. But the issue is largely a red-herring. Section 284's text and historical practice require a flexible, totality-of-the-circumstances approach, even to enhancing for punitive purposes. So the Federal Circuit's two-prong test must fall for the same reasons that this Court struck down the same test for § 285 in *Octane*. Moreover, Pulse's bad faith infringement justifies punitive damages, regardless of whether § 284 is also compensatory.

1. As an initial matter, § 284 is not limited to purely punitive damages, because this Court has recognized that enhancement can also serve a compensatory role. *See, e.g., Teese v. Huntingdon*, 64 U.S. 2, 9 (1860) (permitting enhancement where the defendant "has caused unnecessary expense and injury to the plaintiff"); *Day v. Woodworth*, 54 U.S. 363, 372 (1851) (permitting enhancement where the defendant "has been stubbornly litigious"); *cf.* Albert H. Walker, TEXT-BOOK OF THE PATENT LAWS OF THE UNITED STATES OF AMERICA § 568 (2d ed. 1889) (explaining that enhancement "is not confined to awarding punitive damages, but is to be exercised 'according to the circumstances of the case'" (quoting the 1870 Act)).

Pulse cannot dismiss those decisions as "relics of a bygone era" (at 29) or by pointing to Section 284's mention of damages "adequate to compensate," because as Pulse admits (at 18), § 284 did not "alter in any way the existing practice in federal courts." Likewise, Congress' 1946 addition of a provision for attorney fees eliminated one burden imposed by "stubbornly litigious" infringers, but it left unaddressed the

general disruption to a patentee's business from having to file and prosecute a lawsuit (*e.g.*, employee distraction and time at depositions and document collection) and litigation expenses not recoverable as "costs" (*e.g.*, in this case, expert witness fees and e-discovery charges) and thus left a need for other recovery of such expenses, which are not addressed by a jury's damages award and can thus be awarded by the court without "reexamining" any jury finding. Indeed, the 1946 legislative history still discussed the compensatory purpose with approval. *See Recovery in Patent Infringement Suits: Hearing on H.R. 5231 Before the H. Comm. on Patents*, 79th Cong. 3, 15 (1946).

2. Even if § 284 was purely punitive, this would not limit enhancement to only "willful" infringement. Punitive damages are assessed based on "all the circumstances," not just "the act itself":

> In determining the amount of punitive damages, as well as in deciding whether they should be given at all, the trier of fact can properly consider *not merely the act itself but all the circumstances* including the motives of the wrongdoer, the relations between the parties and the provocation or want of provocation for the act.

RESTATEMENT (SECOND) OF TORTS § 908, cmt. e. In fact, *Exxon Shipping Co. v. Baker*, 554 U.S. 471 (2008), acknowledged that punitive damages can sometimes be based on "gross negligence," which is less than willfulness. *Id.* at 493.

Moreover, punitive damages certainly do not require the two-part *Seagate* test, which categorically prohibits enhancement if an infringer presents any non-sham defense at any time. Punitive damages can

be based on either the "defendant's evil motive ***or*** his reckless indifference," RESTATEMENT (SECOND) OF TORTS § 908(2), so bad faith is independently enough. Pulse's punitive damages cases similarly recognize that an improper motive is independently enough. *See Exxon*, 554 U.S. at 493 (explaining that "[a]ction taken or omitted in order to augment profit represents an enhanced degree of punishable culpability," which would certainly include bad faith patent infringement); *Milwaukee & St. Paul Railway v. Arms*, 91 U.S. 489, 493 (1876) (punitive damages permitted if the act is "done willfully, *or* was the result of that reckless indifference to the rights of others which is equivalent to an intentional violation of them" (emphasis added)).

More fundamentally, enhancement has always had a punitive component, yet nothing like the *Seagate* test has ever been required. Pulse provides no answer to that simple fact.

II. Allowing District Courts to Balance All Relevant Facts is Sound Policy.

1. The appropriate test for enhancement under § 284—one that brings the inquiry back to the flexible statutory text and gives district courts discretion to weigh all the relevant factors that were historically applied before *Seagate* and collected in *Read Corp. v. Portec*, Inc., 970 F.2d 816 (Fed. Cir. 1992)—is also sound policy. Everyone agrees that the patent system entails a delicate balance. *See, e.g., Mayo Collaborative Servs. v. Prometheus Labs., Inc.*, 132 S. Ct. 1289, 1305 (2012). Patents promote innovation by allowing inventors to recover their investment in new technology. For a small, family business like Halo, patents are its life blood for its flagship products. They are the only thing that prevents a larger company, like

Pulse, from stealing its invention and taking its customers. But threats to companies involving bad patents or questionable allegations can impede innovation by unnecessarily diverting valuable resources.

There is no bright-line rule that can resolve this tension for all cases. Instead, district courts should be allowed to do what they did for well over a century before *Seagate*—balance the particulars of the case before them and consider, among other things, whether enhancing damages based on *this* infringer's conduct would promote or hinder innovation.

A flexible enhancement standard encourages, but does not require, companies to pursue commercially-reasonable behavior when faced with patent rights of another party. This behavior might include discussing the patent with its owner, taking a license, designing-around and improving upon the patented technology, or even challenging the patent's validity at the Patent Office under one of the new post-grant proceedings under the America Invents Act. Pulse's proposed rule, by contrast, would encourage infringers to copy others, do nothing, and deal with the consequences if and when the patent owner's injury becomes great enough to force a lawsuit—with ordinary damages (perhaps the same royalty the infringer would have paid if it took a license before the suit) as the worst-case result. Pulse's rule will add to the concerns about excessive patent litigation, rather than promoting behavior that avoids costly lawsuits.

None of this is to say that a party has an affirmative duty to seek legal advice or obtain an opinion of counsel. The point is that the party should at least scrutinize its behavior and take action that is commercially reasonable given the totality of the circumstances. After all, the district court has discretion to

look at the whole picture before enhancing. If the infringer learns about the patent, copies it, and has no basis for thinking its conduct lawful, then the district court should have discretion to enhance damages to address such behavior.

2. A flexible inquiry is the one most consistent with the purpose of § 284. Congress enacted the enhancement statute both to discourage copying and to ensure that an infringer could not flout a patent while owing no more than if it had done the right thing and stopped infringing. *See* S. Rep. No. 79-1503, at 2 (1946) (explaining that enhancement would "discourage infringement of a patent by anyone thinking that all he would be required to pay if he loses the suit would be a royalty"). That purpose would be thwarted if the infringer knew that it could avoid enhancement simply by developing a non-sham defense, because, as the United States points out (at 26), an infringer can do this in almost every case.

Pulse says (at 49-50) that copying is "extremely rare" and that "rational businesses" do not launch products where there is a significant risk of infringement. One wonders if that is really true—after all, Pulse itself saw Halo's patent, copied, yet launched its product with no investigation. Even if Pulse were correct that copying is rare, this bad-faith conduct should be subject to enhanced damages when it occurs.

All of Pulse's (or its *amici*'s) concerns can be accounted for in a flexible test carried out by the district court. Parties who want to proactively investigate and challenge a patent still can, either by filing a declaratory judgment or pursuing the new, less expensive option of challenging it in an *inter partes* review or other post-grant proceeding at the Patent Office. Doing so may be a strong indication of subjective good

faith, as in many of this Court's cases cited above. But parties also would not have to investigate patents where it was unreasonable to do so. For example, a party who independently develops its product, receives a vague notice letter with no indication of which of the product's thousands of features might infringe, requests more information, but receives nothing would not be subject to enhancement if it did nothing more. That is not our case, of course, because Pulse copied Halo's patents and so knew exactly why Halo seeking to discuss a license, and because there was no evidence that these products implicate other patents.

Pulse is wrong to suggest (at 46) that parties would have to do all their analysis immediately upon learning of the patent or never be able to rely on it later. Our point on later-developed defenses is simply that they should not be a *per se* bar to enhancement. The Federal Circuit used to treat "closeness of the case" as one factor to be weighed with the others. *See Read*, 970 F.2d at 827. When there is no other egregious conduct, a later-developed defense might well justify denying enhancement. But when presented with evidence of bad-faith conduct, like copying, the district judge should be able to view the case as a whole and enhance if the totality of the circumstances justify it.

Allowing the judge to balance all relevant facts does not render the standard too unpredictable or vague. Many of the relevant factors require nothing more than the application of common sense—*e.g.*, don't copy a patent without thinking about whether it is lawful; don't steal a smaller competitor's customers by taking its technology; don't ignore invitations to license a patent that you copied and that has withstood

post-grant Patent Office review for its validity. Flexible standards are long known in the law, and infringers that act responsibly have nothing to fear from a district court's sound judgment in applying § 284.

A totality of the circumstances approach will also not exacerbate the patent troll problem. In the case of a true patent troll, a party is faced with the decision of paying a royalty or spending considerably more defending a baseless lawsuit. In that situation, the possibility of enhancement (which could only become relevant if the patent is found to be valid and infringed) is not a significant factor in the accused infringer's decision to pay the royalty or fight. If the suit is actually baseless, then enhancement will never enter the picture. And even if the defendant were to lose, enhancement is under the competent control of district judges, and there is no reason to think that they cannot properly evaluate enhancement, just as they do attorney fees. Pulse cites no empirical evidence that there was a problem with runaway district judges enhancing before *Seagate* and its progeny, and there will not be one after this case.

* * *

Congress's goal in making enhancement discretionary in 1836 was to ensure that courts treated each case on its own facts, rather than applying a one-size-fits-all rule to all cases. But the Federal Circuit's current *per se* rule precluding enhancement if the defendant presents any non-sham defense forces courts to treat the worst copyist the same as the innocent company who never knew the patent existed. That returns us to the very type of unjust regime criticized in *Seymour* and eliminated by Congress. The Court should reject that approach.

III. Vacatur is Necessary to Permit the District Court to Reconsider Enhancement.

Pulse's conduct fits squarely within the type of "egregious" behavior that should warrant enhanced damages. The jury unequivocally found that Pulse acted in bad faith. It found, by "clear and convincing evidence" (which the instructions said meant "highly probable") that Pulse "actually knew, or it was so obvious that Pulse should have known, that Pulse's actions constituted infringement of a valid patent" and that Pulse's behavior fell below "the standards of commerce for its industry." (J.A. 174-75, 191.) The jury's inducement verdict (rendered before *Commil*) also demonstrates bad faith because it was instructed that it could not find inducement if Pulse "believed that the acts it encouraged did not infringe the patents, *or that the patents were invalid.*" (*See* Dkt. No. 470 at 17; J.A. 185-91.) So the jury found that Pulse believed the patent was both infringed and valid, yet continued to infringe. And the district court specifically upheld the finding that Pulse did not subjectively believe its invalidity defense. (Dkt. No. 561 at 11-12.)

Pulse never appealed this findings and does not challenge them here. Instead, Pulse's brief simply ignores that it learned of the patents in 1998, copied, yet did nothing for four years. (*See, e.g.*, J.A. 62-63, 148-53; Dkt. No. 464 at 87.) Pulse *knew* it was infringing during that period—it had copied, after all, so it did not need Halo to tell it what it already knew. In fact, Pulse has never presented any defense that Halo's patents do not cover every accused product, and its corporate representative admitted as much at trial. (J.A. 154-55, 179-91.) Although the parties debated whether some of Pulse's sales, which were negotiated and contracted for in the U.S. but involved foreign

manufacturing and delivery, occurred "within the United States" under 35 U.S.C. § 271(a), there was no doubt that Pulse's U.S. importation did infringe, and the jury found that Pulse further induced infringement by encouraging customers to import many of the foreign-delivered parts into the United States. (J.A. 179-91.)

After four years of having copied but done absolutely nothing, Pulse received Halo's letters in 2002, and had an engineer who was unfamiliar with the relevant legal principles conduct a "cursory" investigation. (J.A. 66-67, 132-34, 146-148, 195-98.) But even then, Pulse never identified any decision-maker who actually relied on this analysis and admitted that it never made any "conscious decision" that it had a right to keep infringing. (J.A. 66-67, 146-48.) Pulse thus held no belief that the patent was invalid before it was sued in 2007, just as the jury found.

Pulse's post-suit behavior was little better. It presented an obviousness defense that conflicted with its own prior patents (which taught away from the invention), its own failed efforts to solve the cracking problem, and a Patent Office reexamination decision upholding validity over materially similar prior art. (Halo Br. at 4-6.) The district court rejected the defense both because Pulse waived its Rule 50 challenge to the jury's adverse findings, and because, even if Pulse hadn't waived, the defense still had no merit. (Pet. App. 45a.) Yet Pulse kept infringing for almost a year after the jury resolved validity and infringement against it, until the injunction went into effect.

These facts are precisely the sort of egregious conduct—rising well above mere negligence—that should have given the district court the ability to enhance damages.

CONCLUSION

For the reasons above, this Court should vacate the judgment and remand.

Respectfully submitted,

CRAIG E. COUNTRYMAN
Counsel of Record
Fish & Richardson P.C.
12390 El Camino Real
San Diego, CA 92130
(858) 678-5070
countryman@fr.com

MICHAEL J. KANE
WILLIAM R. WOODFORD
JOHN A. DRAGSETH
Fish & Richardson P.C.
3200 RBC Plaza
60 South Sixth Street
Minneapolis, MN 55402
(612) 335-5070

Counsel for Petitioner
Halo Electronics, Inc.

February 12, 2016

Supreme Court, U.S.
FILED
DEC 16 2015
OFFICE OF THE CLERK

Nos. 14-1513 and 14-1520

In the Supreme Court of the United States

HALO ELECTRONICS, INC., PETITIONER

v.

PULSE ELECTRONICS, INC., ET AL.

STRYKER CORPORATION, ET AL., PETITIONERS

v.

ZIMMER, INC., ET AL.

ON WRITS OF CERTIORARI
TO THE UNITED STATES COURT OF APPEALS
FOR THE FEDERAL CIRCUIT

BRIEF FOR THE UNITED STATES AS AMICUS CURIAE SUPPORTING PETITIONERS

KELLY R. WELSH
General Counsel
DAWN Y. YAMANE HEWETT
Deputy General Counsel for Strategic Initiatives
MEGAN HELLER
Attorney
Department of Commerce
Washington, D.C. 20230

SARAH HARRIS
General Counsel
THOMAS W. KRAUSE
Acting Solicitor
SCOTT C. WEIDENFELLER
Acting Deputy Solicitor
JOSEPH MATAL
MEREDITH H. SCHOENFELD
Associate Solicitors
United States Patent and Trademark Office
Alexandria, VA 22313

DONALD B. VERRILLI, JR.
Solicitor General
Counsel of Record
BENJAMIN C. MIZER
Principal Deputy Assistant Attorney General
MALCOLM L. STEWART
Deputy Solicitor General
ROMAN MARTINEZ
Assistant to the Solicitor General
MARK R. FREEMAN
TYCE R. WALTERS
Attorneys
Department of Justice
Washington, D.C. 20530-0001
SupremeCtBriefs@usdoj.gov
(202) 514-2217

QUESTION PRESENTED

Section 284 of the Patent Act provides that, if the district court finds for the claimant in a patent-infringement suit, "the court shall award the claimant damages adequate to compensate for the infringement." 35 U.S.C. 284. It further provides that the court "may increase the damages up to three times the amount found or assessed." *Ibid.* The question presented in these cases is as follows:

Whether respondents' presentation at trial of reasonable (though unsuccessful) defenses to petitioners' infringement suits precluded the district courts from awarding enhanced damages under Section 284.

TABLE OF CONTENTS

Page

Interest of the United States 1
Statement 2
Summary of argument 7
Argument:
A. Section 284 authorizes district courts to award enhanced damages as punishment for especially egregious acts of patent infringement 10
1. Section 284's text and history establish that enhanced-damages awards are an appropriate sanction for egregious misconduct 10
2. Courts may award enhanced damages in cases where the infringer's conduct appears unusually egregious 18
B. The Federal Circuit's recent decisions, including its decisions in these cases, have imposed unwarranted restrictions on awards of enhanced damages 22
1. The defendant's assertion at trial of an objectively reasonable defense to liability should not categorically preclude an award of enhanced damages 23
2. Clear and convincing evidence is not required 31
3. A district court's decision whether to award enhanced damages should be reviewed on appeal under an abuse-of-discretion standard 32
Conclusion 34
Appendix — Statutory provisions 1a

TABLE OF AUTHORITIES

Cases: Page

Aro Mfg. Co. v. *Convertible Top Replacement Co.*, 377 U.S. 476 (1964) 15, 16, 25
B.F. Goodrich Co. v. *Consolidated Rubber Tire Co.*, 251 F. 617 (7th Cir.), cert. denied, 247 U.S. 519 (1918) 15
Bard Peripheral Vascular, Inc. v. *W.L. Gore & Assocs., Inc.*:
682 F.3d 1003 (Fed. Cir. 2012), cert. denied, 133 S. Ct. 932 (2013) 6, 22
776 F.3d 837 (Fed. Cir.), cert. denied, 136 S. Ct. 189 (2015) 4, 24, 25, 26
Baseball Display Co. v. *Star Ballplayer Co.*, 35 F.2d 1 (3d Cir. 1929) 14, 19
Blonder-Tongue Labs., Inc. v. *University of Ill. Found.*, 402 U.S. 313 (1971) 20
Birdsall v. *Coolidge*, 93 U.S. 64 (1876) 34
Brennan & Co. v. *Dowagiac Mfg. Co.*, 162 F. 472 (6th Cir. 1908) 19
Brown Bag Filing Mach. Co. v. *Drohen*, 175 F. 576 (2d Cir. 1910) 14
Bryan v. *United States*, 524 U.S. 184 (1998) 27
Carnegie Mellon Univ. v. *Marvell Tech. Grp., Ltd.*, No. 14-1492, 2015 WL 4639309 (Fed. Cir. Aug. 4, 2015) 28
Cincinnati Siemens-Lungren Gas Illuminating Co. v. *Western Siemens-Lungren Co.*, 152 U.S. 200 (1894) 13
Clark v. *Wooster*, 119 U.S. 322 (1886) 21
Coleman Co. v. *Holly Mfg. Co.*, 269 F.2d 660 (9th Cir. 1959) 19

Cases—Continued: Page

Commil USA, LLC v. *Cisco Sys., Inc.*, 135 S. Ct. 1920 (2015) 2
Corning v. *Burden*, 56 U.S. (15 How.) 252 (1854) 12
Cook Cnty., Ill. v. *United States ex rel. Chandler*, 538 U.S. 119 (2003) 17
Cooter & Gell v. *Hartmarx Corp.*, 496 U.S. 384 (1990) 33
Day v. *Woodworth*, 54 U.S. (13 How.) 363 (1852) 12, 16, 21
Dean v. *Mason*, 61 U.S. (20 How.) 198 (1858) 12
Dowling v. *United States*, 473 U.S. 207 (1985) 16
Enterprise Mfg. Co. v. *Shakespeare Co.*, 141 F.2d 916 (6th Cir. 1944) 14
Exxon Shipping Co. v. *Baker*, 554 U.S. 471 (2008) 16
Filer & Stowell Co. v. *Diamond Iron Works*, 270 F. 489 (7th Cir.), cert. denied, 256 U.S. 691 (1921) 14
Florida Prepaid Postsecondary Educ. Expense Bd. v. *College Sav. Bank*, 527 U.S. 627 (1999) 16
Fogerty v. *Fantasy, Inc.* 510 U.S. 517 (1994) 18
Fox v. *Knickerbocker Engraving Co.*, 165 F. 442 (2d Cir. 1908) 14, 34
General Motors Corp. v. *Devex Corp.*, 461 U.S. 648 (1983) 21
Herman & MacLean v. *Huddleston*, 459 U.S. 375 (1983) 32
Highmark Inc. v. *Allcare Health Mgmt. Sys., Inc.*, 134 S. Ct. 1744 (2014) 7, 9, 33
Hogg v. *Emerson*, 52 U.S. (11 How.) 587 (1850) 12
Independent Fed'n of Flight Attendants v. *Zipes*, 491 U.S. 754 (1989) 10
Kingsley v. *Hendrickson*, 135 S. Ct. 2466 (2015) 29

Cases—Continued: Page

Kolstad v. *American Dental Ass'n*, 527 U.S. 526 (1999) 16, 25
Lorillard v. *Pons*, 434 U.S. 575 (1978) 11, 16
Lyon v. *Donaldson*, 34 F. 789 (C.C.N.D. Ill. 1888) 19
National Folding-Box & Paper Co. v. *Elsas*, 81 F. 197 (C.C.S.D.N.Y. 1897), aff'd, 86 F. 917 (2d Cir. 1898) 20
Octane Fitness, LLC v. *ICON Health & Fitness, Inc.*, 134 S. Ct. 1749 (2014) ..... *passim*
Overman Cusion Tire Co. v. *Goodyear Tire & Rubber Co.*, 66 F.2d 361 (2d Cir. 1933), cert. denied, 290 U.S. 681 (1933) 14, 19
Pacific Mut. Life Ins. Co. v. *Haslip*, 499 U.S. 1 (1991) 32
Power Speciality Co. v. *Connecticut Light & Power Co.*, 80 F.2d 874 (2d. Cir. 1936) 14
Read Corp. v. *Portec, Inc.*, 970 F.2d 816 (Fed. Cir. 1992) 5, 21
Rompilla v. *Beard*, 545 U.S. 374 (2005) 29
Safeco Inc. Co. of Am. v. *Burr*, 551 U.S. 247 (2007) 9, 26, 27, 28, 30
Seagate Tech., LLC, 497 F.3d 1360 (Fed. Cir. 2007), cert. denied, 552 U.S. 1230 (2008) ..... *passim*
Seymour v. *McCormick*, 57 U.S. (16 How.) 480 (1854) 11, 12, 16, 18, 26, 34
Shatterproof Glass Corp. v. *Libbey-Owens Ford Co.*, 758 F.2d 613 (Fed. Cir. 1985), cert. dismissed, 474 U.S. 976 (1985) 32
Spectralytics, Inc. v. *Cordis Corp.*, 649 F.3d 1336 (Fed. Cir. 2011) 5, 22
Terry v. *Ohio*, 392 U.S. 1 (1968) 29
Teese v. *Huntingdon*, 64 U.S. (23 How.) 2 (1860) 12, 21
Tilghman v. *Proctor*, 125 U.S. 136 (1888) 13, 16

Cases—Continued: Page

Topliff v. *Topliff*, 145 U.S. 156 (1892) 13, 18, 34
Underwater Devices Inc. v. *Morrison-Knudsen Co.*, 717 F.2d 1380 (Fed. Cir. 1983) 22
Uniloc USA, Inc. v. *Microsoft Corp.*, 632 F.3d 1292 (Fed. Cir. 2011) 24
United States v. *Illinois Cent. R.R.*, 303 U.S. 239 (1938) 28
W.S. Godwin Co. v. *International Steel Tie Co.*, 29 F.2d 476 (6th Cir. 1928) 14, 15
Weston Elec. Instrument Co. v. *Empire Elec. Instrument Co.*, 155 F. 301 (C.C.S.D.N.Y. 1907) 19, 20
Westvaco Corp. v. *International Paper Co.*, 991 F.2d 735 (Fed. Cir. 1993) 19
Whren v. *United States*, 517 U.S. 806 (1996) 31

Constitution and statutes:

U.S. Const.:
Art. I, § 8, Cl. 8 2
Amend. XIV (Due Process Clause) 29
Fair Credit Reporting Act, 15 U.S.C. 1681 *et seq.* 26
Leahy-Smith America Invents Act, Pub. L. No. 112-29, 125 Stat. 284:
§ 17, 125 Stat. 329 23
§ 18, 125 Stat. 329 19
Patent Act of 1793, ch. 11, § 5, 1 Stat. 322 11
Patent Act of 1800, ch. 25, § 3, 2 Stat. 37 11
Patent Act of 1836, ch. 357, § 14, 5 Stat. 123 11
Patent Act of 1870, ch. 230, 16 Stat. 198:
§ 55, 16 Stat. 206 13
§ 59, 16 Stat. 207 13
Patent Act of 1952, Pub. L. No. 82-593, 66 Stat. 813 ..... 3, 15

Statutes—Continued: Page

15 U.S.C. 15(a) 17
15 U.S.C. 1681(m) 30
21 U.S.C. 355(j)(2)(A) 19
21 U.S.C. 355(j)(2)(A)(vi) 19
21 U.S.C. 355(j)(5)(B)(iv) 19
31 U.S.C. 3729(a)(1) 17
35 U.S.C. 2(a)(1) 2
35 U.S.C. 2(b)(8) 2
35 U.S.C. 271(e)(1) 19
35 U.S.C. 273(b) 32
35 U.S.C. 281 2
35 U.S.C. 284 ..... *passim*, 1a
35 U.S.C. 285 ..... 21, 24, 31, 33, 1a
35 U.S.C. 298 ..... 23, 27, 2a
35 U.S.C. 301-307 19
35 U.S.C. 311-319 19
35 U.S.C. 321-329 19

Miscellaneous:

157 Cong. Rec. 3427 (2011) 27
P.J. Federico, *Commentary on the New Patent Act*, 74 J. Pat. & Trademark Off. Soc'y 161 (1983) 3, 15
H.R. Rep. No. 1923, 82d Cong., 2d Sess. (1952) 3, 15
Mark A. Lemley & Ragesh K. Tangri, *Ending Patent Law's Willfulness Game*, 18 Berkeley Tech. L.J. 1085 (2003) 22, 26
Restatement (Second) of Torts:
Vol. 2 (1965) 30
Vol. 4 (1979) 16, 17, 20
S. Doc. 338, 24th Cong., 1st Sess. (1836) 18

In the Supreme Court of the United States

No. 14-1513

HALO ELECTRONICS, INC., PETITIONER

v.

PULSE ELECTRONICS, INC., ET AL.

No. 14-1520

STRYKER CORPORATION, ET AL., PETITIONERS

v.

ZIMMER, INC., ET AL.

ON WRITS OF CERTIORARI
TO THE UNITED STATES COURT OF APPEALS
FOR THE FEDERAL CIRCUIT

BRIEF FOR THE UNITED STATES
AS AMICUS CURIAE SUPPORTING PETITIONERS

INTEREST OF THE UNITED STATES

These cases involve the interpretation of 35 U.S.C. 284, which authorizes district courts to award enhanced damages in infringement suits under the Patent Act. The Court's decision will affect the practical operation of the patent system by clarifying the circumstances in which a district court may deter and punish particularly egregious conduct by patent infringers. The United States Patent and Trademark Office (PTO) is responsible for issuing patents and, through the Secretary of Commerce, advising the

President on issues of patent policy. See 35 U.S.C. 2(a)(1) and (b)(8). Several other federal agencies also have a strong interest in the efficacy of the patent system. The United States therefore has a substantial interest in the Court's disposition of these cases.

STATEMENT

These consolidated cases concern the circumstances under which a district court may award enhanced damages for patent infringement under 35 U.S.C. 284. In both cases, the Federal Circuit held that the district court lacked authority to award enhanced damages because respondents had presented objectively reasonable (though unsuccessful) defenses at trial. See Halo Pet. App. 21a-22a; Stryker Pet. App. 21a-24a.

1. The Patent Clause of the Constitution empowers Congress "[t]o promote the Progress of Science and useful Arts, by securing for limited Times to * * * Inventors the exclusive Right to their * * * Discoveries." U.S. Const. Art. I, § 8, Cl. 8. Title 35 of the United States Code governs the issuance of patents, and it grants a patentee "remedy by civil action for infringement of his patent." 35 U.S.C. 281. Direct patent infringement is a "strict-liability offense," and the defendant's "mental state" is therefore "irrelevant" to the determination whether infringement has occurred. *Commil USA, LLC* v. *Cisco Sys., Inc.*, 135 S. Ct. 1920, 1926 (2015). A prevailing plaintiff in an infringement action is entitled to compensatory damages under 35 U.S.C. 284.

For more than 220 years, United States patent law has authorized trial courts to award enhanced damages in successful infringement suits. See pp. 11-15, *infra*. In the Patent Act of 1952, Congress reor-

ganized the patent laws and consolidated pre-existing grants of authority to award enhanced damages in Section 284.[1] That provision states that, after the amount of compensatory damages has been determined, "the court may increase the damages up to three times the amount found or assessed." 35 U.S.C. 284. This Court has described Section 284 as authorizing enhanced damages in cases involving "willful or bad-faith infringement." *Aro Mfg. Co.* v. *Convertible Top Replacement Co.*, 377 U.S. 476, 508 (1964).

2. Petitioners Stryker Corporation, Stryker Puerto Rico, Ltd., and Stryker Sales Corporation (collectively, Stryker), and respondents Zimmer Surgical, Inc., and Zimmer, Inc. (collectively, Zimmer), are the two main competitors in the orthopedic-pulsed-lavage-device market. Stryker Pet. App. 49a-50a. Such devices are used to clean wounds during surgical procedures. *Ibid.* In 1993, Stryker began to manufacture battery-powered, handheld pulsed-lavage devices, for which it eventually obtained three patents. *Id.* at 5a. When the popularity of Stryker's devices caused Zimmer's market share to drop "precipitously," Zimmer provided an independent contractor with a copy of Stryker's product and effectively instructed the contractor to "[m]ake one for us." *Id.* at 51a.

In 2010, Stryker sued Zimmer for patent infringement and requested enhanced damages under Section 284. Stryker Pet. App. 5a-6a. Zimmer "lost every argument it advanced at claim construction, then lost most of the disputed claims on summary judgment,"

---

[1] Patent Act of 1952, Pub. L. No. 82-593, 66 Stat. 813; see H.R. Rep. No. 1923, 82d Cong., 2d Sess. 29 (1952); P.J. Federico, *Commentary on the New Patent Act*, 75 J. Pat. & Trademark Off. Soc'y 161, 216 (1993).

and ultimately "lost all of its remaining claims" in the jury trial that followed. *Id.* at 52a. The jury found that Zimmer's infringement had been "willful," *id.* at 78a, and the district court awarded compensatory and enhanced damages totaling more than $210 million, *id.* at 73a-79a, 116a-121a.

In concluding that enhanced damages were appropriate, the district court applied the test that the Federal Circuit had announced in *Seagate Technology, LLC*, 497 F.3d 1360, 1368-1372 (2007) (en banc), cert. denied, 552 U.S. 1230 (2008). Stryker Pet. App. 73a-79a, 116a-121a. Under that test, a plaintiff seeking enhanced damages must first establish, by clear and convincing evidence, that the defendant has committed "willful infringement." *Seagate*, 497 F.3d at 1368, 1370-1371. To establish willfulness, a prevailing plaintiff must show (1) that the infringer was objectively reckless by acting "despite an objectively high likelihood that its actions constituted infringement of a valid patent"; and (2) that this "objectively-defined risk * * * was either known or so obvious that it should have been known to the accused infringer." *Id.* at 1371. The Federal Circuit has since held that, if the infringer ultimately presents an objectively reasonable (though unsuccessful) defense of non-infringement or invalidity at trial, its conduct cannot be viewed as objectively reckless and an enhanced-damages award is categorically precluded. See, *e.g.*, *Bard Peripheral Vascular, Inc.*, v. *W.L. Gore & Assocs., Inc.*, 776 F.3d 837, 844, cert. denied, 136 S. Ct. 189 (2015). If the plaintiff satisfies the two-prong *Seagate* standard, the district court may then consider the totality of the circumstances to decide whether to award enhanced damages. *Seagate*, 497 F.3d at 1368-1369; *Spectralyt-*

ics, Inc. v. *Cordis Corp.*, 649 F.3d 1336, 1348-1349 (Fed. Cir. 2011) (discussing the factors potentially relevant to the exercise of such discretion under *Read Corp.* v. *Portec, Inc.*, 970 F.2d 816, 826-827 (Fed. Cir. 1992)).

The district court found that Zimmer had chosen a "high-risk/high-reward strategy of competing immediately and aggressively in the pulsed lavage market," while "opt[ing] to worry about the potential legal consequences later." Stryker Pet. App. 52a. The court emphasized that "Zimmer all-but instructed its design team to copy Stryker's products." *Id.* at 77a. The court ultimately concluded that both prongs of *Seagate*'s willfulness test had been satisfied, noting "the one-sidedness of the case and the flagrancy and scope of Zimmer's infringement," and it awarded treble damages. *Id.* at 73a-74a, 119a; see *id.* at 116a-120a (considering *Read* factors).

The Federal Circuit affirmed the district court's judgment of infringement but vacated the award of treble damages. Stryker Pet. App. 4a. As required by circuit precedent, the court applied *de novo* review to the district court's willfulness determination. *Id.* at 22a. The court of appeals concluded that, because Zimmer had ultimately asserted an objectively reasonable non-infringement or invalidity defense to each of Stryker's infringement claims, Zimmer had not acted recklessly and an enhanced-damages award was precluded. *Id.* at 22a-24a.

3. Petitioner Halo Electronics, Inc. (Halo) and respondents Pulse Electronics, Inc. and Pulse Electronics Corporation (collectively, Pulse) compete in the market for electronic components. Halo Pet. App. 4a-5a. Halo alleged that Pulse had copied its patented

"open construction" surface-mount transformers. See Halo Pet. 4; Halo Pet. App. 43a. In 2002, Halo sent Pulse two letters offering to license certain of its patents for surface-mount electronic package products. Halo Pet. App. 7a. A Pulse engineer spent approximately two hours reviewing those Halo patents and concluded that they were invalid. *Ibid.* Pulse continued to sell its surface-mount electronic package products. *Ibid.*

In 2007, Halo sued Pulse for patent infringement, and it sought enhanced damages under Section 284. Halo Pet. App. 7a. The jury rejected Pulse's invalidity defense, and it found that Pulse had infringed Halo's patents by manufacturing the competing products. *Id.* at 32a-33a. The jury also found that Pulse's infringement was "willful." *Id.* at 33a.

The district court nonetheless declined to award enhanced damages. Halo Pet. App. 65a. Because Pulse had presented an obviousness defense that was "not objectively baseless, or a 'sham,'" *id.* at 64a (quoting *Bard Peripheral Vascular, Inc.* v. *W.L. Gore & Assocs., Inc.*, 682 F.3d 1003, 1007 (Fed. Cir. 2012), cert. denied, 133 S. Ct. 932 (2013) (*Bard II*)), the court concluded that Halo had not proved by clear and convincing evidence "that [Pulse] acted despite an objectively high likelihood that its actions constituted infringement of a valid patent," *id.* at 62a (quoting *Bard II*, 682 F.3d at 1005). The court therefore found that enhanced damages were precluded by *Seagate*'s first prong. *Id.* at 65a.

The Federal Circuit affirmed the district court's denial of enhanced damages. Halo Pet. App. 19a-22a. It agreed with the district court that Pulse's infringement had not been objectively reckless under *Seagate*

because, "although Pulse was ultimately unsuccessful in challenging the validity of the Halo patents, Pulse did raise a substantial question as to the obviousness of the Halo patents." *Id.* at 21a.

Judge O'Malley concurred in an opinion joined by Judge Hughes. Halo Pet. App. 25a-31a. Judge O'Malley questioned whether the Federal Circuit's two-prong "willfulness" standard was consistent with the text of Section 284 or with this Court's recent decisions in *Octane Fitness, LLC* v. *ICON Health & Fitness, Inc.*, 134 S. Ct. 1749 (2014), and *Highmark Inc.* v. *Allcare Health Management System, Inc.*, 134 S. Ct. 1744 (2014). Halo Pet. App. 25a-26a. As relevant here, she suggested that (1) a more "flexible totality of the circumstances test" should replace *Seagate*'s two-prong test, (2) the standard of proof should be "preponderance of the evidence," and (3) appellate courts should review the decision to grant or deny a fee award with greater deference to district courts. *Id.* at 28a-29a.

SUMMARY OF ARGUMENT

Section 284 authorizes district courts to award up to three times the amount of the patent holder's actual damages as a remedy for patent infringement. The text and history of that provision make clear that enhanced damages are appropriate to punish intentional, willful, or otherwise egregious conduct by infringers. For this purpose, particular conduct may qualify as especially egregious even though the infringer ultimately presents a plausible (though unsuccessful) non-infringement or invalidity defense at trial.

A. Section 284 provides that a district court "may increase the [compensatory] damages up to three

times the amount found or assessed." 35 U.S.C. 284. Although the statute does not specify criteria that the court should consider in exercising that authority, such awards have long been used to punish infringers whose misconduct is egregious in a way that ordinary infringement is not. Congress first authorized discretionary enhanced-damages awards in 1836, and it reaffirmed that authority in 1870. In the decades that followed, this Court and the courts of appeals repeatedly explained that enhanced damages were appropriate in cases where the infringer's unlawful conduct was intentional, willful, flagrant, or undertaken in bad faith. In doing so, this Court treated enhanced damages as a form of relief analogous to punitive damages, and courts applied common-law punitive-damages principles when determining whether enhancement was warranted.

In 1952, Congress reorganized the patent laws and relocated the authority to grant enhanced damages to Section 284. In doing so, however, Congress made no substantive change to the authority district courts had exercised since 1836. Section 284 therefore should be construed to ratify and incorporate the pre-existing standards under which courts could award enhanced damages to punish egregious misconduct.

B. In *Seagate Technology, LLC*, 497 F.3d 1360, 1371 (2007) (en banc), cert. denied, 552 U.S. 1230 (2008), and subsequent cases, the Federal Circuit has held that (1) enhanced damages may not be awarded under Section 284 unless the infringer's conduct was objectively reckless, and (2) a finding of objective recklessness is categorically precluded when the infringer presents a reasonable (though unsuccessful) defense to infringement at trial. See pp. 22-24, *infra*

(discussing cases). The practical effect of that approach is to bar a district court from awarding enhanced damages even against an infringer who deliberately copies a patented device, while subjectively (and correctly) believing that his conduct constitutes unlawful infringement, if the infringer is later able to muster a non-frivolous defense at trial.

The Federal Circuit's *Seagate* and post-*Seagate* decisions rest in part on the correct understanding that enhanced damages should not routinely be awarded under Section 284, but should instead be reserved for atypical cases involving the most egregious infringing conduct. The specific limitations that the court has imposed, however—and, in particular, the rule that an infringer's eventual assertion of a plausible trial defense categorically bars an enhanced-damages award—are unwarranted. And while the court in *Seagate* relied heavily on this Court's decision in *Safeco Insurance Co. of America* v. *Burr*, 551 U.S. 47 (2007), *Safeco* is distinguishable in important respects.

The Federal Circuit's interpretation of Section 284 is flawed in other ways as well. This Court should clarify that the facts relevant to enhanced damages must be proved under the preponderance-of-the-evidence standard that generally governs patent litigation. See *Octane Fitness, LLC* v. *ICON Health & Fitness, Inc.*, 134 S. Ct. 1749, 1758 (2014). It should also clarify that a district court's grant or denial of enhanced damages must be reviewed for abuse of discretion on appeal. *Highmark Inc.* v. *Allcare Health Mgmt. Sys., Inc.*, 134 S. Ct. 1744, 1747 (2014).

Because the Federal Circuit considered the enhanced-damages awards at issue in these cases

under improper legal standards, both of the decisions below should be vacated.

ARGUMENT

UNDER 35 U.S.C. 284, A DEFENDANT'S ASSERTION AT TRIAL OF AN OBJECTIVELY REASONABLE NON-INFRINGEMENT OR INVALIDITY DEFENSE DOES NOT PRECLUDE AN AWARD OF ENHANCED DAMAGES

A. Section 284 Authorizes District Courts To Award Enhanced Damages As Punishment For Especially Egregious Acts Of Patent Infringement

Section 284 provides that, after the patent holder's actual damages have been determined, the district court in an infringement suit "may increase the damages up to three times the amount found or assessed." 35 U.S.C. 284. When a particular infringer's misconduct is egregious in a way that run-of-the-mine infringement is not, an enhanced-damages award under Section 284 may be appropriate even if the defendant ultimately asserts an objectively reasonable non-infringement or invalidity defense at trial.

1. Section 284's text and history establish that enhanced-damages awards are an appropriate sanction for egregious misconduct

Although Section 284 does not specify the circumstances in which a district court may enhance damages in infringement suits, "in a system of laws discretion is rarely without limits." *Independent Fed'n of Flight Attendants* v. *Zipes*, 491 U.S. 754, 758 (1989). For more than a century before Congress enacted Section 284 in 1952, federal trial courts had been authorized but not required to award enhanced damages in successful patent-infringement suits. This Court construed the Patent Acts of 1836 and 1870 as author-

izing enhanced-damages awards to punish infringers whose actions were especially egregious. Congress effectively ratified that understanding by enacting Section 284, which consolidated the predecessor damages provisions without substantive change. See *Lorillard* v. *Pons*, 434 U.S. 575, 580-581 (1978).

a. The Patent Act of 1793 *mandated* a treble-damages award in every successful patent-infringement suit.[2] The 1836 Act eliminated that directive, authorizing but not requiring enhancement of damages in this context.[3]

Over the ensuing decades, this Court emphasized that district courts should award such enhanced damages only in atypical cases where the defendant's infringement was marked by egregious misconduct. In *Seymour* v. *McCormick*, 57 U.S. (16 How.) 480 (1854), for example, this Court explained Congress's decision to abandon mandatory treble damages in favor of the discretionary rule:

> Experience had shown the very great injustice of a horizontal rule equally affecting all cases, without regard to their peculiar merits. The defendant who acted in ignorance or good faith, claiming under a junior patent, was made liable to the same penalty with the wanton and malicious pirate. This rule was manifestly unjust. For there is no good reason why taking a man's property in an invention should be trebly punished, while the measure of damages

---

[2] Patent Act of 1793, ch. 11, § 5, 1 Stat. 322 (stating that award must be "at least equal to three times" the damages); see Patent Act of 1800, ch. 25, § 3, 2 Stat. 38 (stating that award must be "equal to three times the actual damage sustained").

[3] Patent Act of 1836, ch. 357, § 14, 5 Stat. 123 (noting that "it shall be in the power of the court" to award up to treble damages).

> as to other property is single and actual damages. It is true, where the injury is wanton or malicious, a jury may inflict vindictive or exemplary damages, not to recompense the plaintiff, but to punish the defendant.
>
> In order to obviate this injustice, the Patent Act of 1836 confines the jury to the assessment of "actual damages." The power to inflict vindictive or punitive damages is committed to the discretion and judgment of the court within the limit of trebling the actual damages found by the jury.

Id. at 488-489.

Other contemporaneous decisions of this Court reflected the same approach. The Court noted that enhanced damages could be awarded "where the wrong has been done, under aggravated circumstances," *Dean* v. *Mason*, 61 U.S. (20 How.) 198, 203 (1858); or when, "in the opinion of the court, the defendant has not acted in good faith, or has caused unnecessary expense and injury to the plaintiff," *Teese* v. *Huntingdon*, 64 U.S. (23 How.) 2, 9 (1860); or when the defendant "has been stubbornly litigious," *Day* v. *Woodworth*, 54 U.S. (13 How.) 363, 372 (1852). Conversely, the Court explained that, if a defendant "has acted in good faith, and is not a wanton infringer of the plaintiff's rights," he should not "be subjected to the same stringent and harsh rule of damages which might be justly inflicted on a mere pirate." *Corning* v. *Burden*, 56 U.S. (15 How.) 252, 271 (1854). The Court likewise noted that treble damages would be inappropriate if the infringer "appeared in truth to be ignorant of the existence of the patent right, and did not intend any infringement." *Hogg* v. *Emerson*, 52 U.S. (11 How.) 587, 607 (1850).

b. In the 1870 Act, Congress carried forward the 1836 Act's grant of discretion to district courts to award treble damages in patent actions at law. Section 59 of that Act stated that district courts could make such awards "according to the circumstances of the case." Ch. 230, § 59, 16 Stat. 207. The 1870 Act also granted equity courts hearing patent suits the authority to award compensatory damages (in addition to equitable relief), and Section 55 of that Act extended to such courts "the same [authority] in [their] discretion" to award treble damages as Section 59 made available in actions at law. § 55, 16 Stat. 206.

In applying the 1870 Act, this Court continued to explain that district courts could "inflict vindictive or punitive damages" "whenever the circumstances of the case appear to require it." *Tilghman* v. *Proctor*, 125 U.S. 136, 143-144 (1888). For example, the Court suggested that it would have been appropriate to award such damages to punish a bad-faith infringer who had copied technology from his former employer and used it to start up a rival business. *Topliff* v. *Topliff*, 145 U.S. 156, 174 (1892) (nonetheless affirming denial of damages enhancement as a permissible exercise of trial court's discretion). The Court reiterated, however, that enhanced damages generally were not appropriate where "[t]here is no pretence of any wanton and wilful breach by the plaintiff" and "nothing that suggests punitive damages, or that shows wherein the defendant was damnified." *Cincinnati Siemens-Lungren Gas Illuminating Co.* v. *Western Siemens-Lungren Co.*, 152 U.S. 200, 204 (1894).

c. From 1870 to 1952, the courts of appeals applied similar standards when reviewing enhanced-damages awards under the 1870 Act. Their decisions generally

recognized that enhanced damages served a primarily punitive purpose and could be awarded against infringers whose misconduct was substantially more culpable than run-of-the-mill infringement. Thus, courts explained that enhanced damages would be appropriate when the infringer's conduct was "consciously wrongful,"[4] "wanton, deliberate, and willful,"[5] "conscious and deliberate,"[6] "deliberate and willful,"[7] or "flagrant and willful,"[8] or when the conduct involved "a bald case of piracy"[9] or the infringer "had reason to believe that it was infringing."[10] Conversely, courts recognized that enhanced damages would be inappropriate if the infringer was "honestly mistaken as to a reasonably debatable question of validity,"[11] had a "good faith contention that the patent is inva-

---

[4] *Enterprise Mfg. Co.* v. *Shakespeare Co.*, 141 F.2d 916, 920-921 (6th Cir. 1944).

[5] *Power Specialty Co.* v. *Connecticut Light & Power Co.*, 80 F.2d 874, 878 (2d Cir. 1936).

[6] *Overman Cushion Tire Co.* v. *Goodyear Tire & Rubber Co.*, 66 F.2d 361, 361-362 (2d Cir.), cert. denied, 290 U.S. 681 (1933).

[7] *Baseball Display Co.* v. *Star Ballplayer Co.*, 35 F.2d 1, 3-4 (3d Cir. 1929); *W.S. Godwin Co.* v. *International Steel Tie Co.*, 29 F.2d 476, 478 (6th Cir. 1928).

[8] *Filer & Stowell Co.* v. *Diamond Iron Works*, 270 F. 489, 490 (7th Cir.), cert. denied, 256 U.S. 691 (1921).

[9] *Brown Bag Filling Mach. Co.* v. *Drohen*, 175 F. 576, 577 (2d Cir. 1910).

[10] *Fox* v. *Knickerbocker Engraving Co.*, 165 F. 442, 444 (2d Cir. 1908).

[11] *Enterprise*, 141 F.2d at 920-921.

lid,"[12] or "honestly believed that he had a right to manufacture [the infringing device]."[13]

d. Thus, when Congress enacted Section 284 in the Patent Act of 1952, it acted against the backdrop of more than a century of decisions from this Court and the courts of appeals holding that enhanced damages could appropriately be awarded in cases of egregious conduct by an infringer. Pub. L. No. 82-593, 66 Stat. 792. Although the courts had not embraced any single formulation or test, the settled understanding was that enhanced damages should not be awarded in the typical patent-infringement case, but should be reserved to punish egregious conduct that the district court concluded was intentional, willful, or undertaken in bad faith. The 1952 Act was the product of extensive study and review of the patent laws, and its drafters would have been aware of the voluminous case law interpreting the 1836 and 1870 Acts' enhanced-damages provisions. See generally H.R. Rep. No. 1923, 82d Cong., 2d Sess. 2-3 (1952) (1952 House Report).

Section 284 served "merely" to consolidate the pre-existing damages provisions in order "'to clarify the statement of the statutes.'" *Aro Mfg. Co.* v. *Convertible Top Replacement Co.*, 377 U.S. 476, 505 n.20 (1964) (quoting 1952 House Report 10); see 1952 House Report 29; P.J. Federico, *Commentary on the New Patent Act*, 75 J. Pat. & Trademark Off. Soc'y 161, 216 (1993). Consistent with that congressional intent to preserve existing law, the Court has described Section 284 as allowing a patentee to recover enhanced dam-

---

[12] *W.S. Godwin*, 29 F.2d at 478.

[13] *B.F. Goodrich Co.* v. *Consolidated Rubber Tire Co.*, 251 F. 617, 625 (7th Cir.), cert. denied, 247 U.S. 519 (1918).

ages "in a case of willful or bad-faith infringement." *Aro*, 377 U.S. at 508; accord *Dowling* v. *United States*, 473 U.S. 207, 227 n.19 (1985) (noting that Section 284 permits treble damages in cases of "willful infringement"). Section 284 therefore should be construed to incorporate the settled understanding of its statutory predecessors, under which enhanced damages were reserved for atypical cases where the infringer's conduct was especially egregious. Cf. *Lorillard*, 434 U.S. at 580-581.

e. This Court also has repeatedly referred to Section 284 and its predecessors as authorizing a form of "punitive damages." *Florida Prepaid Postsecondary Educ. Expense Bd.* v. *College Sav. Bank*, 527 U.S. 627, 648 n.11 (1999); see *Aro*, 377 U.S. at 508; *Tilghman*, 125 U.S. at 143-144; *Seymour*, 57 U.S. (16 How.) at 489. Under the common law, punitive damages have traditionally been limited to cases where the defendant's conduct is "outrageous," "owing to gross negligence," marked by "willful, wanton, and reckless indifference for the rights of others," or "behavior even more deplorable." *Exxon Shipping Co.* v. *Baker*, 554 U.S. 471, 492-493 (2008) (citations and internal quotation marks omitted); see generally *Kolstad* v. *American Dental Ass'n*, 527 U.S. 526, 535-539 (1999); *Day*, 54 U.S. (13 How.) at 371; 4 Restatement (Second) of Torts § 908, at 464 (1979) (Restatement) ("Punitive damages may be awarded for conduct that is outrageous, because of the defendant's evil motive or his reckless indifference to the rights of others."). Such damages are not warranted as a sanction for "ordinary negligence," but require more culpable conduct involving either some form of "wrongful purpose or intent" or "[r]eckless indifference to the rights of

others and * * * deliberate disregard of them." Restatement § 908 cmt. b, at 465.

To be sure, the enhanced damages authorized by Section 284 differ in significant respects from traditional punitive damages, since the enhancement decision is made by the district court rather than the jury and the potential enhancement is capped at three times actual damages. Cf. *Cook Cnty., Ill.* v. *United States ex rel. Chandler*, 538 U.S. 119, 131-132 (2003) ("Treble damages certainly do not equate with classic punitive damages, which leave the jury with open-ended discretion over the amount."). Nevertheless, this Court's frequent use of the word "punitive" to describe enhanced damages in patent-infringement suits, in decisions issued both before and after the enactment of Section 284, reinforces the understanding that such enhanced damages are reserved for particularly egregious conduct. That characterization also suggests that the principles governing traditional punitive-damages awards may provide useful guidance in determining whether enhancement is appropriate in a particular patent-infringement case.[14]

---

[14] Some federal statutes mandate an award of treble damages in every case where the plaintiff establishes a violation of the relevant law. See, *e.g.*, 15 U.S.C. 15(a); 31 U.S.C. 3729(a)(1). Treble damages awarded as a matter of course under those statutes cannot aptly be analogized to punitive damages. As explained above, however, the federal patent laws since 1836 have rejected that model in favor of a discretionary damages-enhancement regime. This Court has construed that change as reflecting Congress's intent to reserve enhanced damages for particularly egregious cases in which the defendant's conduct especially deserves punishment.

2. *Courts may award enhanced damages in cases where the infringer's conduct appears unusually egregious*

For the reasons explained above, Section 284 empowers district courts to award enhanced damages for egregious conduct by infringers. District courts generally should award such damages only when necessary to punish and deter the sort of intentional or reckless conduct that this Court and lower federal courts identified in decisions applying Section 284's predecessors, and that has traditionally been subject to punitive-damages awards under the common law. Although there is "no precise rule or formula" to govern the district court's exercise of discretion to punish egregious conduct under Section 284, *Octane Fitness, LLC* v. *ICON Health & Fitness, Inc.*, 134 S. Ct. 1749, 1756 (2014) (quoting *Fogerty* v. *Fantasy, Inc.*, 510 U.S. 517, 534 (1994)), certain categories of egregious misconduct are most likely to support enhanced-damages awards under Section 284.

The paradigmatic enhanced-damages case is one in which the defendant deliberately copied the plaintiff's patented invention, despite (1) being aware of the patent, and (2) lacking any contemporaneous, good-faith belief that the copying was authorized or otherwise lawful. The Senate analysis of the bill that became the 1836 Patent Act identified the "copy[ing] [of] patented machines" as one of the "evils" at which the bill was directed. S. Doc. 338, 24th Cong., 1st Sess. 3-4 (1836). This Court agreed, noting that the 1836 Act's enhanced-damages provision permitted district judges to punish the "wanton and malicious pirate." *Seymour*, 57 U.S. (16 How.) at 488; see *Topliff*, 145 U.S. at 174. Both before and after 1952, courts regu-

larly awarded enhanced damages to punish intentional copying.[15] Although deliberate copying will often provide an appropriate basis for enhanced damages, the district court in any given case must consider all the relevant circumstances when deciding whether to make such an award.[16]

Even when the patent holder does not prove intentional copying, enhanced damages may be warranted

---

[15] See, *e.g.*, *Coleman Co.* v. *Holly Mfg. Co.*, 269 F.2d 660, 665-666 (9th Cir. 1959); *Overman*, 66 F.2d at 361-362; *Baseball Display Co.*, 35 F.2d at 3-4; *Brennan & Co.* v. *Dowagiac Mfg. Co.*, 162 F. 472, 476 (6th Cir. 1908); *Weston Elec. Instrument Co.* v. *Empire Elec. Instrument Co.*, 155 F. 301, 301 (C.C.S.D.N.Y. 1907); *Lyon* v. *Donaldson*, 34 F. 789, 791 (C.C.N.D. Ill. 1888).

[16] Not all deliberate copying will support an award of enhanced damages. In some circumstances, federal law affirmatively encourages the copying of an invention claimed in a patent, such as in conducting the tests needed for pre-marketing approval of a generic drug, see 35 U.S.C. 271(e)(1), or when incentivizing generic-drug manufacturers to challenge patents they believe to be invalid through the filing of an abbreviated new drug application, see 21 U.S.C. 355(j)(2)(A), (vi), and (5)(B)(iv). The Patent Act likewise has been understood to encourage design-around innovation by insulating from enhanced-damages awards a defendant who derived its product from the patentee, but who made reasonable (though unsuccessful) efforts to design around the patent's claims. See, *e.g.*, *Westvaco Corp.* v. *International Paper Co.*, 991 F.2d 735, 745 (Fed. Cir. 1993). When a defendant who has copied and commercialized a patented invention unsuccessfully asserts an invalidity defense at trial, the district court may consider, in determining whether enhanced damages should be awarded, whether the defendant could have invoked alternative avenues for contesting the patent's validity before the PTO. See 35 U.S.C. 301-307 (ex parte reexamination), 311-319 (inter partes review), 321-329 (post-grant review); Leahy-Smith America Invents Act (America Invents Act), Pub. L. No. 112-29, § 18, 125 Stat. 329 (covered-business-method review).

if the infringer has otherwise engaged in bad faith or reckless conduct. Cf. *Seagate*, 497 F.3d at 1371. That may be true, for example, if the defendant initially develops its own product independently, but continues to make and sell it even after becoming aware that it is covered by a competitor's valid patent. Enhanced damages may also be appropriate when the infringer has engaged in particularly egregious litigation misconduct, such as deliberately destroying evidence or defying court orders.[17]

District courts should limit Section 284 enhanced-damages awards to cases involving the sorts of misconduct discussed above. In particular, as the Federal Circuit correctly recognized in *Seagate*, ordinary negligence is not a sufficient basis for imposing enhanced damages. 497 F.3d at 1371 (overruling Federal Circuit precedent permitting enhanced damages based on a "threshold" that is "akin to negligence"); Restatement § 908 cmt. b, at 465 (rejecting ordinary negligence as a basis for punitive damages). Nor can a court appropriately infer bad faith or egregious misconduct from the mere fact that the defendant, rather than acceding to a patent holder's demand letter, chooses to assert a trial defense that is ultimately unsuccessful. An innocent infringer who did not intentionally copy a patented invention or engage

---

[17] See, *e.g.*, *Weston Elec.*, 155 F. at 301 (trebling damages where defendants "pursued a policy * * * of obstruction and concealment of the facts," and "transferring the assets" in an effort to "render any recovery nugatory"); *National Folding-Box & Paper Co.* v. *Elsas*, 81 F. 197, 197 (C.C.S.D.N.Y. 1897) (increasing damages where there was a "spiriting away of the books of the defendants after decree, to the great embarrassment of the accounting"), aff'd, 86 F. 917 (2d Cir. 1898).

in other willful, bad-faith, or aggravated misconduct can rely on a reasonable defense to liability without triggering enhanced damages. A contrary approach would create undue disincentives to potentially lawful and productive economic activity, and it would disserve other important Patent Act policies.[18]

Even in a case that *does* involve egregious conduct, the district court may decline to award enhanced damages based on its case-specific assessment of the particular facts and equities at issue. See *Read Corp.* v. *Portec, Inc.*, 970 F.2d 816, 826-827 (Fed. Cir. 1992) (discussing non-exhaustive list of potentially relevant considerations). Courts should exercise judgment and common sense, and they should generally reserve enhanced-damages awards for particularly egregious conduct that the court deems worthy of punishment and deterrence.[19]

---

[18] See *Blonder-Tongue Labs., Inc.* v. *University of Ill. Found.*, 402 U.S. 313, 344 (1971) (noting the Patent Act's policy of "encourag[ing] authoritative testing of patent validity"); *General Motors Corp.* v. *Devex Corp.*, 461 U.S. 648, 658 (1983) (Stevens, J., concurring) ("It is as important to the public that competition should not be repressed by worthless patents, as that the patentee of a really valuable invention should be protected in his monopoly") (brackets and citation omitted).

[19] Historically, enhanced-damages awards were also available to compensate defendants for costs suffered as a result of unnecessary or vexatious litigation. See, *e.g.*, *Clark* v. *Wooster*, 119 U.S. 322, 326 (1886); *Teese*, 64 U.S. (23 How.) at 9; *Day*, 54 U.S. (13 How.) at 372. Since 1946, however, some of those costs have been potentially compensable pursuant to the Patent Act's attorney's-fee provision, 35 U.S.C. 285. See *Octane Fitness*, 134 S. Ct. at 1753, 1755-1756.

B. The Federal Circuit's Recent Decisions, Including Its Decisions In These Cases, Have Imposed Unwarranted Restrictions On Awards Of Enhanced Damages

As explained above, the Federal Circuit has held that (1) proof of objective recklessness is a prerequisite to an enhanced-damages award under Section 284, and (2) an infringer's eventual assertion of a plausible defense at trial categorically precludes an objective-recklessness finding. See pp. 4-5, *supra*. That court has further held that the facts supporting an enhanced-damages award must be proved by clear and convincing evidence. *Id.* at 4. The Federal Circuit has also adopted a trifurcated standard of appellate review under which the first prong of the *Seagate* test is reviewed *de novo* and the second for substantial evidence, and the ultimate decision whether to award enhanced damages for abuse of discretion. *Bard Peripheral Vascular, Inc.* v. *W.L. Gore & Assocs., Inc.*, 682 F.3d 1003, 1005, 1008 (Fed. Cir. 2012), cert. denied, 133 S. Ct. 932 (2013) (*Bard II*); *Spectralytics, Inc.* v. *Cordis Corp.*, 649 F.3d 1336, 1347 (Fed. Cir. 2011).

The Federal Circuit's approach to Section 284 was motivated in large part by a justifiable concern that its pre-*Seagate* precedent had authorized enhanced damages under an overly-generous standard "more akin to negligence." 497 F.3d at 1371.[20] The Federal

---

[20] The Federal Circuit's decision in *Underwater Devices Inc.* v. *Morrison-Knudsen Co.*, 717 F.2d 1380 (1983), had established an "affirmative duty to * * * seek and obtain competent legal advice from counsel *before* the initiation of any possible infringing activity." *Id.* at 1389-1390. That decision both created a massive market in independent legal opinions, see Mark A. Lemley & Ragesh K. Tangri, *Ending Patent Law's Willfulness Game*, 18 Berkeley

Circuit acted appropriately in seeking to ensure that enhanced damages would be reserved for the most egregious infringing conduct. The specific limitations that the court has imposed, however—and, in particular, its categorical rule that the infringer's assertion at trial of *any* objectively reasonable defense to liability precludes an enhanced-damages award—are inappropriate. That is so both because those limitations are unsupported by Section 284's text and history, and because their practical effect is to make enhanced damages unavailable for a significant class of infringing conduct that is properly viewed as especially egregious. The Federal Circuit's requirement of clear and convincing evidence, and its trifurcated standard of appellate review, are also unsound. This Court should clarify the proper analysis and vacate both of the decisions below.

1. The defendant's assertion at trial of an objectively reasonable defense to liability should not categorically preclude an award of enhanced damages

Under *Seagate*'s first prong, enhanced damages are permitted only if the infringer "acted despite an objectively high likelihood that its actions constituted infringement of a valid patent." *Seagate*, 497 F.3d at

---

Tech. L.J. 1085, 1090-1092 (2003), and gave rise to significant "practical concerns * * * related to the attorney-client privilege," *Seagate*, 497 F.3d at 1369. The Federal Circuit adopted the *Seagate* standard in part to address those concerns. *Id.* at 1368-1370 (overruling *Underwater Devices*). In the 2011 America Invents Act, Congress addressed those problems more directly by providing that "[t]he failure of an infringer to obtain the advice of counsel with respect to any allegedly infringed patent * * * may not be used to prove that the accused infringer willfully infringed." § 17, 125 Stat. 329; 35 U.S.C. 298.

1371. The infringer's state of mind "is not relevant" to that test, and the infringer's assertion of a reasonable non-infringement or invalidity defense at trial categorically precludes an award of enhanced damages. *Ibid.*; *Uniloc USA, Inc.* v. *Microsoft Corp.*, 632 F.3d 1292, 1310 (Fed. Cir. 2011); see *Bard Peripheral Vascular, Inc.* v. *W.L. Gore & Assocs., Inc.*, 776 F.3d 837, 844 (Fed. Cir.), cert. denied, 136 S. Ct. 189 (2015) (*Bard III*) (holding that first prong of *Seagate* test cannot be satisfied "where the accused infringer has raised a 'substantial question' as to the validity or noninfringement of the patent"). In both of the cases currently before the Court, the Federal Circuit treated respondents' assertion of objectively reasonable defenses at trial as a dispositive ground for rejecting petitioners' enhanced-damages claims. See Halo Pet. App. 21a; Stryker Pet. App. 22a, 24a. That approach is unwarranted.

a. Section 284's text does not preclude an award of enhanced damages in a case where the infringer ultimately presents a reasonable defense at trial. See generally *Octane Fitness*, 134 S. Ct. at 1755-1757 (rejecting analogous "objectively baseless" requirement in construing Section 285's attorney's-fees provision). Neither Section 284's statutory predecessors nor judicial decisions construing those earlier statutes imposed that categorical limitation. For more than a century before Congress enacted the 1952 Act, this Court and the lower courts consistently recognized that enhanced damages could be appropriate based on an infringer's deliberate, malicious, or intentional bad-faith conduct. See pp. 11-15, *supra*. Those decisions do not suggest that deliberate or conscious wrongdoing cannot give rise to enhanced damages simply be-

cause the infringer or its counsel subsequently develops and presents a plausible (though unsuccessful) defense at trial. Rather, the courts in construing those provisions overwhelmingly focused on the infringer's conduct and state of mind *at the time of infringement*. *Ibid.*; see generally *Kolstad*, 527 U.S. at 535-538 (discussing importance of defendant's state of mind with respect to eligibility for punitive damages).

In *Aro*, the Court explained that enhanced damages are appropriate under Section 284 in cases of "willful *or* bad-faith infringement." 377 U.S. at 508 (emphasis added). Even if the defendant's subsequent development of a plausible defense could preclude a finding of "willfulness," *Aro* indicates that "bad faith" infringement is a sufficient basis for awarding enhanced damages. When a person engages in unlawful conduct under circumstances that would otherwise support an inference of bad faith, his subsequent development of a reasonable but unsuccessful defense to liability does not negate that inference.

b. The specific limitations imposed by the Federal Circuit disserve Section 284's purposes by insulating from enhanced-damages liability a significant class of misconduct that is properly viewed as particularly egregious. Under that approach, an infringer who intentionally infringes a patent, while aware of no facts suggesting that the patent is invalid, is wholly protected from an enhanced-damages award if it or its counsel develops a plausible defense to liability by the time of trial. See *Bard III*, 776 F.3d at 844 (holding that first prong of *Seagate* test is not satisfied if the defendant presents a "substantial question" about whether the conduct was lawful); Halo Pet. App. 20a

(same if defense presented at trial is not "objectively baseless"). Given the complexity of patent law, and the sophistication and ingenuity of the patent bar, that is a low hurdle to clear. As academic commentators have observed, "[l]awyers will generally be able to come up with plausible arguments that the patent is invalid or not infringed." Mark A. Lemley & Ragesh K. Tangri, *Ending Patent Law's Willfulness Game*, 18 Berkeley Tech. L.J. 1085, 1092 (2003). The Federal Circuit's approach thus insulates a substantial subset of the "wanton and malicious pira[cy]" that enhanced patent damages have traditionally served to punish and deter. *Seymour*, 57 U.S. (16 How.) at 488; see generally pp. 11-15, *supra*.

c. In construing Section 284 to require "objective recklessness," the Federal Circuit in *Seagate* reasoned that (1) its own precedent had established "willfulness" as a prerequisite to enhanced patent damages, and (2) this Court in *Safeco Insurance Co. of America* v. *Burr*, 551 U.S. 47 (2007), had defined the term "willfully" to include objective recklessness. *Seagate*, 497 F.3d at 1368, 1370-1372; Halo Pet. App. 142a-143a (Taranto, J., concurring in the denial of rehearing en banc); see generally *Safeco*, 551 U.S. at 56-60, 68-70 (interpreting Fair Credit Reporting Act (FCRA) provision that authorized punitive damages for "willfully" violating certain requirements). The Federal Circuit subsequently held that infringing conduct cannot be deemed objectively reckless if the infringer asserts a plausible defense to liability at trial. See, *e.g.*, *Bard III*, 776 F.3d at 844. That chain of reasoning is flawed.

i. Although many prior decisions had used the terms "willful" and "willfulness" as shorthand to de-

scribe the egregious conduct that can support an enhanced-damages award, those terms do not appear in either Section 284 or its statutory predecessors. The Court in *Safeco* cautioned, moreover, that "'willfully' is a 'word of many meanings whose construction is often dependent on the context in which it appears.'" 551 U.S. at 57 (quoting *Bryan* v. *United States*, 524 U.S. 184, 191 (1998)). The Federal Circuit therefore erred in treating *Safeco* as controlling the enhanced-damages inquiry under the Patent Act. In awarding enhanced damages in pre-1952 patent cases, courts frequently used the adjective "willful" and its variants—along with other terms such as "flagrant," "malicious," "consciously wrongful," etc.—to refer to a range of egregious bad-faith or morally blameworthy conduct that especially deserved punishment. See pp. 11-15, *supra*. Section 284's text and history thus do not support a rigid rule that objective recklessness is always a prerequisite to enhanced damages.[21]

ii. The Federal Circuit's interpretation of Section 284 also reflects a misunderstanding of *Safeco*'s willfulness standard. In *Seagate*, the Federal Circuit stated that "an award of enhanced damages requires a

---

[21] Zimmer suggests (Br. in Opp. 29) that Congress "tacitly endorsed" *Seagate*'s willfulness inquiry when it promulgated the America Invents Act. In fact, Congress rejected numerous proposals that would have either endorsed or rejected *Seagate*. See Stryker Br. 53-55. Congress ultimately chose not to amend Section 284, but simply to make clear that an infringer's failure to obtain advice of counsel "may not be used to prove that the accused infringer willfully infringed." 35 U.S.C. 298; see 157 Cong. Rec. 3427 (2011) (statement of Sen. Kyl) (explaining that "[t]he present bill appropriately leaves patent-damages law to common law development in the courts," and that "[t]he present bill also makes no changes to the standard for awards of treble damages").

showing of willful infringement," and that a plaintiff "must" satisfy *Safeco*'s objective-recklessness standard in order to make that showing. 497 F.3d at 1368, 1371.[22]

The Court in *Safeco* made clear, however, that the plaintiff in a FCRA suit may prove a willful violation by establishing *either* the defendant's objective recklessness or its *knowing* misconduct. 551 U.S. at 57 ("where willfulness is a statutory condition of civil liability, we have generally taken it to cover not only knowing violations of a standard, but reckless ones as well"); see *id.* at 60 ("action falling within the knowing subcategory does not simultaneously fall within the reckless alternative"). See also *United States* v. *Illinois Cent. R.R. Co.*, 303 U.S. 239, 242-243 (1938) (explaining that, in the civil context, the term "willfully" "often denotes that which is intentional, or knowing, or voluntary, as distinguished from accidental.") (citation omitted). Construing Section 284 in a similar vein would further Congress's purposes, since a person who intends to infringe (or who knows that his actions constitute infringement) is more culpable than a person who is reckless with respect to such infringement.

iii. Even if the objective reasonableness of a defendant's conduct could preclude an enhanced-damages award under Section 284, the reasonableness

---

[22] In a decision issued after Stryker and Halo petitioned for certiorari in these cases, the Federal Circuit appeared to indicate that willfulness is *not* a requirement for enhanced damages if such damages are sought based on the infringer's "actual knowledge that it was infringing." *Carnegie Mellon Univ.* v. *Marvell Tech. Grp., Ltd.*, No. 14-1492, 2015 WL 4639309, at *12-*13 (Aug. 4, 2015). The court neither explained what such "actual knowledge" requires nor sought to reconcile that holding with *Seagate* and other precedent.

analysis should turn on the facts and circumstances known to the defendant *at the time of the infringing conduct*. In a variety of legal contexts, the determination whether particular actions were objectively reasonable is based on a similar time-of-action analysis. See, *e.g.*, *Kingsley* v. *Hendrickson*, 135 S. Ct. 2466, 2473 (2015) (explaining that, when assessing the "objective reasonableness" of an officer's decision to use force for Due Process Clause purposes, "[a] court must make th[e] determination from the perspective of a reasonable officer on the scene, including what the officer knew at the time, not with the 20/20 vision of hindsight"); *Rompilla* v. *Beard*, 545 U.S. 374, 381 (2005) (when assessing objective reasonableness of counsel's performance at trial, "hindsight is discounted" by assessing that performance based on "counsel's perspective at the time," "as if one stood in counsel's shoes" at the time of trial) (citation omitted). The reasonableness of a search, for example, depends on the facts available to the searching officer when the search is initiated, not on whether the search ultimately uncovers evidence of a crime. See, *e.g.*, *Terry* v. *Ohio*, 392 U.S. 1, 21-22 (1968).

Safeco is not to the contrary. The Court in *Safeco* explained that, under traditional common-law principles, a person's conduct is reckless

> if he does an act or intentionally fails to do an act which it is his duty to the other to do, *knowing or having reason to know of facts which would lead a reasonable man to realize*, not only that his conduct creates an unreasonable risk of physical harm to another, but also that such risk is substantially greater than that which is necessary to make his conduct negligent.

Safeco, 551 U.S. at 69 (emphasis added) (quoting 2 Restatement (Second) of Torts § 500, at 587 (1965)). The Court decided *Safeco* on the understanding that the defendant, at the time of its unlawful conduct, had actually relied on a reasonable (though erroneous) interpretation of the FCRA. See *id.* at 68 ("Safeco did not give Burr and Massey any notice because it thought [15 U.S.C.] 1681(m) did not apply to initial applications."). The Court did not address the question whether a defendant who fails to exercise diligence at the time of the prohibited conduct, despite an evident high risk that the conduct is unlawful, can avoid a finding of recklessness by *later* developing a plausible defense to liability.[23] And the Federal Circuit's *Seagate* and post-*Seagate* decisions have identi-

---

[23] The Court in *Safeco* stated that, under the FCRA, "evidence of subjective bad faith" cannot support a willfulness finding—based on either knowledge or recklessness—when the defendant's "reading" of a statute or other legal requirement is "objectively reasonable." 551 U.S. at 70 n.20. That statement is best understood to refer to a defendant's understanding of the applicable legal requirement *at the time of the misconduct*. See *id.* at 71 n.20 (discussing circumstances where a defendant "adopt[ed]" or "followed" an "interpretation that could reasonably have found support in the courts"). The Court thus held under the FCRA that, if a defendant acts with an awareness of a reasonable ground for believing his action to be lawful, his conduct cannot be deemed objectively reckless, whatever his subjective motivation may have been. That approach is consistent with the rules that govern in other areas of the law where a time-of-action analysis applies. For example, while the reasonableness of a seizure depends on the facts available to the officer at the time the seizure is initiated, the Court's precedents "foreclose any argument that the constitutional reasonableness of traffic stops depends on the actual motivations of the individual officers involved." *Whren* v. *United States*, 517 U.S. 806, 813 (1996).

fied no precedent indicating that the assertion of a plausible defense at trial categorically bars an award of traditional punitive damages under common-law principles.

In both of the cases at issue here, the Federal Circuit concluded that respondents were not objectively reckless because they had presented reasonable (though unsuccessful) defenses *at trial*. Halo Pet. App. 21a-22a; Stryker Pet. App. 23a-24a. The court did not assess whether respondents had any reasonable basis for believing, at the time of their infringing actions, that their conduct was lawful. The decisions below therefore should be vacated even if this Court concludes that objective recklessness is a prerequisite for enhanced damages under Section 284.

2. Clear and convincing evidence is not required

The Federal Circuit's test for enhanced damages under Section 284 is also erroneous insofar as it requires willfulness to be established by "clear and convincing evidence." See *Seagate*, 497 F.3d at 1371. In *Octane Fitness*, this Court rejected the same requirement in the course of disapproving the virtually identical two-prong test the Federal Circuit had imposed for awarding attorney's fees under Section 285. 134 S. Ct. at 1758. The Court explained that (1) "patent-infringement litigation has always been governed by a preponderance of the evidence standard," (2) the preponderance standard is "generally applicable in civil actions," and (3) Section 285 "imposes no specific evidentiary burden, much less such a high one." *Ibid.* (citation omitted).

For the same reasons, facts relevant to the enhanced-damages analysis under Section 284 need be proved only by a preponderance of the evidence.

Unlike another provision of the Patent Act, see 35 U.S.C. 273(b), Section 284 does not expressly require proof by clear and convincing evidence, and we are aware of no pre-1952 decision of this Court or any court of appeals imposing such a requirement.[24] The Constitution does not require clear and convincing evidence for an award of punitive damages, see *Pacific Mut. Life Ins. Co.* v. *Haslip*, 499 U.S. 1, 23 n.11 (1991), and "imposition of even severe civil sanctions" is often governed by the preponderance standard, *Herman & MacLean* v. *Huddleston*, 459 U.S. 375, 389-390 (1983) (citing examples). In the absence of any textual or historical reason to believe that Congress intended to impose a higher burden under Section 284, the preponderance standard should apply here.

2. A district court's decision whether to award enhanced damages should be reviewed on appeal under an abuse-of-discretion standard

The Federal Circuit has established a trifurcated standard of appellate review for enhanced-damages awards, under which the first component of the *Seagate* test is reviewed *de novo*, the second component for substantial evidence, and the ultimate decision whether to award fees for abuse of discretion. See p. 22, *supra*. That approach is unfounded. The district court's decision to award (or decline to award)

---

[24] The Federal Circuit appears to have first embraced the clear-and-convincing-evidence standard in *Shatterproof Glass Corp.* v. *Libbey-Owens Ford Co.*, 758 F.2d 613 (1985), cert. dismissed, 474 U.S. 976 (1985), which stated that "[t]he jurisprudence * * * uniformly requires clear and convincing evidence in support of increased damages." *Id.* at 628. But the court cited no authority for that proposition, and we are aware of none.

enhanced damages under Section 284 should instead be reviewed under a unitary abuse-of-discretion standard.

In *Highmark Inc.* v. *Allcare Health Management System, Inc.*, 134 S. Ct. 1744 (2014), this Court held that an appellate court should review "all aspects" of a district court's determination with respect to Section 285 attorney's-fee awards under an abuse-of-discretion standard. *Id.* at 1747. The Court emphasized both (1) Section 285's textual commitment to the district court of the decision whether to award fees, and (2) that the district court's experience with a case "over a prolonged period of time" leaves it better positioned than the court of appeals to conduct the case-specific analysis used to determine whether a fee award is appropriate. *Id.* at 1748. The same considerations apply equally to enhanced-damages awards under Section 284.

Abuse-of-discretion review in this context need not and should not be toothless. Applying a unitary abuse-of-discretion standard "does not preclude an appellate court's correction of a district court's legal or factual error." *Highmark*, 134 S. Ct. at 1748 n.2. "[A] district court would necessarily abuse its discretion if it based its ruling on an erroneous view of the law or on a clearly erroneous assessment of the evidence." *Ibid.* (quoting *Cooter & Gell* v. *Hartmarx Corp.*, 496 U.S. 384, 405 (1990)). Those principles ensure that the Federal Circuit will continue to engage in plenary review of any pure legal question that may be embedded in the district court's enhanced-damages analysis. A district court would also abuse its discretion if it awarded enhanced damages under Section 284 based on the explicit understanding that

such damages should be the norm in successful infringement suits, or if it based an enhanced-damages award on purportedly exceptional circumstances that in fact are typical of such suits.

The Federal Circuit's trifurcated standard of appellate review in this context, however, is contrary to the text of Section 284 and to this Court's precedents. See *Seymour*, 57 U.S. (16 How.) at 489 ("The power to inflict vindictive or punitive damages is committed to the discretion and judgment of the court within the limit of trebling the actual damages found by the jury."); *Birdsall* v. *Coolidge*, 93 U.S. 64, 69-70 (1876). Prior to 1952, this Court and the courts of appeals uniformly reviewed enhanced-damages decisions for abuse of discretion. See, *e.g.*, *Topliff*, 145 U.S. at 174 (affirming trial court's denial of enhanced-damages award, while stating that the Court would "not have disturbed the decree of the court below, if it had seen fit to increase the damages"); *Fox* v. *Knickerbocker Engraving Co.*, 165 F. 442, 444-445 (2d Cir. 1908) (affirming discretionary award despite court's own view that award should not have been made). There is no reason to believe that Congress intended to change that practice when it enacted Section 284.

CONCLUSION

The judgments of the court of appeals should be vacated.

Respectfully submitted.

KELLY R. WELSH
General Counsel
DAWN Y. YAMANE HEWETT
Deputy General Counsel for Strategic Initiatives
MEGAN HELLER
Attorney
Department of Commerce

SARAH HARRIS
General Counsel
THOMAS W. KRAUSE
Acting Solicitor
SCOTT C. WEIDENFELLER
Acting Deputy Solicitor
JOSEPH MATAL
MEREDITH H. SCHOENFELD
Associate Solicitors
United States Patent and Trademark Office

DONALD B. VERRILLI, JR.
Solicitor General
BENJAMIN C. MIZER
Principal Deputy Assistant Attorney General
MALCOLM L. STEWART
Deputy Solicitor General
ROMAN MARTINEZ
Assistant to the Solicitor General
MARK R. FREEMAN
TYCE R. WALTERS
Attorneys

DECEMBER 2015

APPENDIX

1. 35 U.S.C. 284 provides:

Damages

Upon finding for the claimant the court shall award the claimant damages adequate to compensate for the infringement, but in no event less than a reasonable royalty for the use made of the invention by the infringer, together with interest and costs as fixed by the court.

When the damages are not found by a jury, the court shall assess them. In either event the court may increase the damages up to three times the amount found or assessed. Increased damages under this paragraph shall not apply to provisional rights under section 154(d).

The court may receive expert testimony as an aid to the determination of damages or of what royalty would be reasonable under the circumstances.

2. 35 U.S.C. 285 provides:

Attorney fees

The court in exceptional cases may award reasonable attorney fees to the prevailing party.

3. 35 U.S.C. 298 provides:

Advice of counsel

The failure of an infringer to obtain the advice of counsel with respect to any allegedly infringed patent, or the failure of the infringer to present such advice to the court or jury, may not be used to prove that the accused infringer willfully infringed the patent or that the infringer intended to induce infringement of the patent.

Supreme Court, U.S.
FILED
DEC 16 2015
OFFICE OF THE CLERK

Nos. 14-1513 & 14-1520

IN THE

Supreme Court of the United States

HALO ELECTRONICS, INC., PETITIONER,
V.
PULSE ELECTRONICS, INC., ET AL., RESPONDENTS.

STRYKER CORPORATION, ET AL., PETITIONERS,
V.
ZIMMER, INC., ET AL., RESPONDENTS.

On Writs of Certiorari to the United States Court of Appeals for the Federal Circuit

BRIEF OF AMICUS CURIAE AMERICAN INTELLECTUAL PROPERTY LAW ASSOCIATION IN SUPPORT OF NEITHER PARTY

LISA K. JORGENSON,
Executive Director
AMERICAN INTELLECTUAL PROPERTY LAW ASSOCIATION
241 18th Street, South
Suite 700
Arlington, VA 22202
(703) 415-0780

PETER A. SULLIVAN
Counsel of Record
FOLEY HOAG LLP
1540 Broadway, 23rd Fl.
New York, NY 10036
(646) 927-5500
psullivan@foleyhoag.com

DONALD R. WARE
STEPHEN T. BYCHOWSKI
FOLEY HOAG LLP
155 Seaport Boulevard
Boston, MA 02210
(617) 832-1000

December 16, 2015

TABLE OF CONTENTS

TABLE OF AUTHORITIES iii

STATEMENT OF INTEREST 1

SUMMARY OF ARGUMENT 2

ARGUMENT 3

I. It Has Been Well-Settled for Almost 200 Years that Awarding Enhanced Damages against Patent Infringers Requires Proof of Willful Infringement. 3

A. The Patent Act has made willful infringement a predicate for an award of enhanced damages since 1836. 3

B. This Court has consistently held that willfulness is required for enhanced damages. 7

C. For over a century, circuit courts have applied this Court's willfulness requirement. 9

II. Proof of Willful Infringement Should Require Only a Showing of the Subjective Bad Faith of the Infringer. 12

A. Because enhanced damages are punitive, the standard for willfulness should be exacting and predictable enough to ensure consistent and restrained application by the lower courts. 12

B. The *Seagate* standard goes too far, allowing blameworthy conduct to go unpunished. 17

C. A subjective bad faith standard is more consistent with this Court's precedents and the purpose of enhanced damages. 18

D. A totality of the circumstances standard is inconsistent with the purpose of enhanced damages. 23

CONCLUSION 26

TABLE OF AUTHORITIES

CASES

Aro Mfg. Co. v. Convertible Top Replacement Co.,
377 U.S. 476 (1964) 7, 8, 11, 13

Atlantic Sounding Co. v. Townsend,
557 U.S. 404 (2009) 13

Baumstimler v. Rankin,
677 F.2d 1061 (5th Cir. 1982) 10

Brooks Furniture Mfg. v. Dutalier Int'l Inc.,
393 F.3d 1378 (Fed. Cir. 2005) 24, 25

Day v. Woodworth,
54 U.S. (13 How.) 363 (1852) 13

Dowagiac Mfg. Co. v. Minn. Moline Power Co.,
235 U.S. 641 (1915) 9

Dowling v. United States,
473 U.S. 207 (1985) 9, 11

Egry Register Co. v. Standard Register Co.,
23 F.2d 438 (6th Cir. 1928) 21

Enter. Mfg. Co. v. Shakespeare Co.,
141 F.2d 916 (6th Cir. 1944) 10, 23

Exxon Shipping Co. v. Baker,
554 U.S. 471 (2008) 13, 14, 18

Fla. Prepaid Postsecondary Educ. Expense Bd. v. Coll. Sav. Bank,
527 U.S. 627 (1999) 9, 12, 22

Fox v. Knickerbocker Engraving Co.,
165 F 442 (2d Cir. 1908) 11

i4i Ltd. P'ship v. Microsoft Corp.,
598 F.3d 831 (Fed. Cir. 2010) 26

Kilopass Tech., Inc. v. Sidense Corp.,
738 F.3d 1302 (Fed. Cir. 2013) 24

Livingston v. Woodworth,
56 U.S. (15 How.) 546 (1854) 8

Octane Fitness, LLC v. ICON Health & Fitness, Inc.,
134 S. Ct. 1749 (2014) 23, 24, 25, 26

Overman Cushion Tire Co. v. Goodyear Tire & Rubber Co.,
66 F.2d 361 (2d Cir. 1933) 23

Pac. Mut. Life Ins. Co. v. Haslip,
499 U.S. 1 (1991) 13, 15

Power Specialty Co. v. Conn. Light & Power Co.,
80 F.2d 874 (2d Cir. 1936) 10

Prof'l Real Estate Inv'rs, Inc. v. Columbia Pictures Indus., Inc.,
508 U.S. 49 (1993) 24, 25

Read Corp. v. *Portec, Inc.*,
970 F.2d 816 (Fed. Cir. 1992) 9

Root v. Ry. Co.,
105 U.S. 189 (1882) 5, 8, 13

Safeco Ins. Co. of Am. v. Burr,
551 U.S. 47 (2007) 5

In re Seagate Tech., LLC,
497 F.3d 1360 (Fed. Cir. 2007) ..... passim

Seymour v. McCormick,
57 U.S. (16 How.) 480 (1854) ..... passim

State Farm Mut. Auto. Ins. Co. v. Campbell,
538 U.S. 408 (2003) 15

Underwater Devices Inc. v. Morrison-Knudsen Co.,
717 F.2d 1380 (Fed. Cir. 1983) 15

Union Carbide Corp. v. Graver Tank & Mfg. Co.,
282 F.2d 653 (7th Cir. 1960) 10, 13

Wilden Pump & Eng'g Co. v. Pressed & Welded Prods. Co.,
655 F.2d 984 (9th Cir. 1981) 10

STATUTES

35 U.S.C. § 284 ..... passim

35 U.S.C. § 285 ..... 23, 24, 25

35 U.S.C. § 298 ..... 15, 19

Patent Act of 1793, ch. 11, § 5, 1 Stat. 318 (1793) 3

Patent Act of 1836, ch. 357, § 14, 5 Stat. 117 (1836) 2, 3, 4, 5

Patent Act of 1870, ch. 230, §§ 55, 59, 16 Stat. 206 (1870) 5

Patent Act of 1922, ch. 58, § 8, 42 Stat. 392 (1922) 5

Patent Act of 1946, ch. 726, § 4921, 60 Stat. 778 (1946) 5, 25

LEGISLATIVE MATERIALS

92 Cong. Rec. H1857 (daily ed. Mar. 4, 1946) 7

Recovery in Patent Infringement Suits: Hearing on H.R. 5231 before the H. Comm. on Patents, 79th Cong. 9-10 (1946) 6, 23

S. Rep. No. 79-1503 (1946), *reprinted in* 1946 U.S.C.C.A.N. 1386 25

OTHER AUTHORITIES

Black's Law Dictionary (5th ed. 1979) 21, 22

Fed. Trade Comm'n, *To Promote Innovation: The Proper Balance of Competition and Patent Law and Policy* (2003), https://www.ftc.gov/sites/default/files/documents/reports/promote-innovation-proper-balance-competition-and-patent-law-and-policy/innovationrpt.pdf..... 16

P.J. Federico, *Commentary on the New Patent Act*, 75 J. Pat. & Trademark Off. Soc'y 161 (1993) 7

W. Page Keeton et al., *Prosser and Keeton on Law of Torts* § 34 (5th ed. 1984)..... 5

Kimberly A. Moore, *Empirical Statistics on Willful Patent Infringement*, 14 Fed. Cir. B.J. 227 (2004) 16

STATEMENT OF INTEREST

The American Intellectual Property Law Association (AIPLA) is a national bar association of approximately 14,000 members who are primarily lawyers engaged in private or corporate practice, in government service, and in the academic community.[1] AIPLA members represent a wide and diverse spectrum of individuals, companies, and institutions involved directly or indirectly in the practice of patent, trademark, copyright, trade secret, and unfair competition law, as well as other fields of law affecting intellectual property. Our members represent both owners and users of intellectual property. Our mission includes helping establish and maintain fair and effective laws and policies that stimulate and reward invention while

---

[1] In accordance with Supreme Court Rule 37.6, amicus curiae states that this brief was not authored, in whole or in part, by counsel to a party, and that no monetary contribution to the preparation or submission of this brief was made by any person or entity other than the amicus curiae and its counsel. Specifically, after reasonable investigation, AIPLA believes that (i) no member of its Board or Amicus Committee who voted to file this brief, or any attorney in the law firm or corporation of such a member, represents a party to this litigation in this matter; (ii) no representative of any party to this litigation participated in the authorship of this brief; and (iii) no one other than AIPLA, or its members who authored this brief and their law firms or employers, made a monetary contribution to the preparation or submission of this brief.

balancing the public's interest in healthy competition, reasonable costs, and basic fairness.[2]

SUMMARY OF ARGUMENT

Obtaining enhanced damages for patent infringement requires a showing that the infringement was willful. This willfulness requirement has been the law dating back to the Patent Act of 1836. The particular standard that the Federal Circuit has created to determine willfulness, however, is difficult to satisfy in practice and categorically exempts some willful infringers from punishment. The totality of the circumstances test proposed by Petitioners, on the other hand, should also be rejected. It takes the standard too far in the other direction, resulting in a test too vague to be applied with precision. AIPLA urges this Court to adopt a subjective bad faith standard for willful infringement, which strikes the right balance of the relevant interests and which is consistent with this Court's treatment of enhanced damages for patent infringement and exemplary damages in other contexts.

---

[2] In accordance with Supreme Court Rule 37.3, all parties have consented to the filing of this amicus brief. All parties except Zimmer, Inc. and Zimmer Surgical, Inc. (collectively, "Zimmer") have filed blanket letters of consent with the Clerk. AIPLA sought consent to file this brief with counsel for Zimmer, and Zimmer's consent is contained in an email filed with this brief.

ARGUMENT

I. It Has Been Well-Settled for Almost 200 Years that Awarding Enhanced Damages against Patent Infringers Requires Proof of Willful Infringement.

Courts have long been required to find willful infringement before awarding enhanced damages as shown by the Patent Act itself, this Court's opinions interpreting that statute, and the decisions of the circuit courts of appeals. Willfulness is not, as Petitioners argue, merely sufficient for enhanced damages, but has always been a necessary predicate.

A. The Patent Act has made willful infringement a predicate for an award of enhanced damages since 1836.

Prior to 1836, an award of enhanced damages for infringement was mandatory. The Patent Act of 1793 stated that an adjudged infringer "shall forfeit and pay to the patentee, a sum, that shall be at least equal to three times the price, for which the patentee has usually sold or licensed to other persons, the use of the said invention." Patent Act of 1793, ch. 11, § 5, 1 Stat. 318, 322 (1793). This law allowed for treble damages (or more) regardless of the blameworthiness of the infringer's conduct.

The Patent Act of 1836, however, changed the law, permitting only the award of compensatory damages upon a finding of infringement and allowing for enhanced damages under limited circumstances:

> [I]t shall be in the power of the court to render judgment for any sum above the amount found by such verdict as the actual damages sustained by the plaintiff, not exceeding three times the amount thereof, according to the circumstances of the case, with costs.

Patent Act of 1836, ch. 357, § 14, 5 Stat. 117, 123 (1836).

This Court addressed the policies motivating the 1836 change in law and described the circumstances giving rise to enhanced damages in *Seymour v. McCormick*, 57 U.S. (16 How.) 480 (1854). The Court explained that imposing mandatory enhanced damages across the board was unjust because such a rule punished both willful and non-willful infringers equally. The law, instead, should only impose the "vindictive or exemplary" punishment of enhanced damages on "wanton or malicious" infringers. *Id.* at 489.

> Experience had shown the very great injustice of a horizontal rule equally affecting all cases, without regard to their peculiar merits. The defendant who acted in ***ignorance or good faith*** ... was made liable to the same penalty with the ***wanton and malicious*** pirate. This rule was manifestly unjust. For there is no good reason why taking a man's property in an invention should be trebly punished, while the measure of damages as to other property is single and actual damages. It is true, where

> the injury is wanton or malicious, a jury may inflict vindictive or exemplary damages, not to recompense the plaintiff, but to punish the defendant.
>
> In order to obviate this injustice, the Patent Act of 1836 confines the jury to the assessment of "actual damages." The power to inflict vindictive or punitive damages is committed to the discretion and judgment of the court within the limit of trebling the actual damages found by the jury.

Id. at 488-89 (emphasis added). While the Court uses the phrase "wanton" instead of "willful," the terms are synonymous. *See Safeco Ins. Co. of Am. v. Burr*, 551 U.S. 47, 57 (2007) ("willful" and "wanton" are treated "as meaning the same thing" (quoting W. Page Keeton et al., *Prosser and Keeton on Law of Torts* § 34 (5th ed. 1984)).

Differentiating the wanton and malicious pirate from the ignorant infringer for purposes of enhanced damages has been a fixture of the law ever since. Although Congress subsequently amended the Patent Act several times between 1836 and 1952, it left this damages provision intact. *See, e.g.*, Patent Act of 1870, ch. 230, §§ 55, 59, 16 Stat. 206, 207 (1870); Patent Act of 1922, ch. 58, § 8, 42 Stat. 392 (1922); Patent Act of 1946, ch. 726, § 4921, 60 Stat. 778 (1946); *see also Root v. Ry. Co.*, 105 U.S. 189, 200 (1882) (noting that 1870 amendment "renewed the [enhanced damages] provision previously in force").

In none of the subsequent iterations of the Patent Act did Congress undertake to alter whether or how enhanced damages may be awarded. The legislative history indicates that Congress was determined not to disturb this aspect of patent law. At a hearing of the House Committee on Patents concerning the 1946 amendment, Assistant Commissioner of Patents, Conder C. Henry, testified that exemplary damages are confined to cases of "willful infringement with the deliberate attempt of capturing the market which has been established under the patent." *Recovery in Patent Infringement Suits: Hearing on H.R. 5231 Before the H. Comm. on Patents*, 79th Cong. 9-10 (1946).

At the same hearing, John Stedman, representing the Department of Justice, reiterated this point, testifying that the law deters infringement by allowing for injunctions, awards of reasonable royalties, and "the threat of exemplary or punitive damages in the case of willful infringement." *Id.* at 18.

Representatives Lanham and Cravens also agreed that enhanced damages are limited to willful infringement in a colloquy when the bill came to the floor of the House.

> MR. LANHAM. I would say that in the case of an innocent infringer who had infringed without notice and without knowledge that it would be unreasonable to collect from him more than the reasonable royalty.
>
> MR. CRAVENS. I agree on that.

> MR. LANHAM. But if there has been willful infringement, then the damages as set out in the bill can be collected.
>
> MR. CRAVENS. And such damages could still be recovered under the existing law in the case of willful infringement.

92 Cong. Rec. H1857 (daily ed. Mar. 4, 1946).

In 1952, Congress reorganized and consolidated the Patent Act, enacting Section 284 in its current form. As with the 1946 amendment, the 1952 codification was not intended to alter in any way the long history of requiring willfulness for enhanced damages. *See Aro Mfg. Co. v. Convertible Top Replacement Co.*, 377 U.S. 476, 505 n.20 (1964) ("In the 1952 codification, §§ 67 and 70 of the 1946 Code were consolidated in the present § 284. The stated purpose was merely 'reorganization in language to clarify the statement of the statutes.'"); P.J. Federico, *Commentary on the New Patent Act*, 75 J. Pat. & Trademark Off. Soc'y 161, 216 (1993) ("Section 284 ... consolidates provisions in two sections of the old statute with some changes in language.").

B. This Court has consistently held that willfulness is required for enhanced damages.

This Court has been consistent in construing the Patent Act to require willful infringement as a predicate to enhanced damages ever since *Seymour v. McCormick* was decided in 1854.

In that same year, the Court issued an opinion that emphasized in a related context its holding in *Seymour* that only willful infringers should be punished with enhanced damages. In *Livingston v. Woodworth*, the Court reversed a damages award that was double the amount calculated to compensate the patentee. 56 U.S. (15 How.) 546, 559 (1854). One of the reasons for the Court's reversal, it explained, was that punitive damages would be unwarranted because the defendants acted in good faith. In particular, the evidence demonstrated defendants' belief from the beginning that the asserted patent was invalid and that their machine was protected by an earlier patent. *Id.* at 560. Once the priority and validity of the asserted patent were established, the defendants consented to an injunction. *Id.* Because the defendants "were ... in no correct sense, wanton infringers," the Court concluded that "there can be perceived in this case no ground whatever for the exercise of ... a power" to "inflict[] damages, by way of penalty." *Id.*

Since *Seymour*, this Court has reaffirmed the rule that willfulness is required for enhanced damages. In *Aro Manufacturing Co. v. Convertible Top Replacement Co.*, discussing the available remedies for contributory infringement, the Court stated, "[the patentee] could in a proper case obtain an injunction; it could recover such damages as had actually been suffered from the contributory infringement ...; [and] it could in a case of willful or bad-faith infringement recover punitive or 'increased' damages under the statute's trebling provision." 377 U.S. at 508; *see also Root v. Ry. Co.*, 105 U.S. at 195-96 (discussing with approval

decision in *Seymour* that enhanced damages should not be mandatory because of "the very great injustice of a horizontal rule equally affecting all cases, without regard to their peculiar merits); *Dowagiac Mfg. Co. v. Minn. Moline Power Co.*, 235 U.S. 641, 644 (1915) (in remanding to allow for further evidence to be presented at trial to support compensatory damages, noting that the case was not one where the infringement was "wanton or wilful").

Similarly, in *Dowling v. United States*, this Court stated that "[a]mong the available remedies [to patent owners in civil cases] are treble damages for willful infringement." 473 U.S. 207, 227 n.19 (1985). As recently as 1999, Justice Stevens reiterated the willfulness requirement, stating, "[i]n the case of private infringement suits, treble damages are available only 'where the infringer acted in wanton disregard of the patentee's patent rights, that is, where the infringement is willful.'" *Fla. Prepaid Postsecondary Educ. Expense Bd. v. Coll. Sav. Bank*, 527 U.S. 627, 663 n.15 (1999) (Stevens, J., dissenting) (quoting *Read Corp. v. Portec, Inc.*, 970 F.2d 816, 826 (Fed. Cir. 1992)).

C. For over a century, circuit courts have applied this Court's willfulness requirement.

A willfulness standard that has the effect of eliminating the traditional requirement for enhanced damages would run counter both to this Court's precedents and Congress' intent. It would also undo over a century of practice by the Federal Circuit, and before its creation, the practice of the

other circuit courts of appeals. Circuit courts have consistently denied enhanced damages where there was insufficient evidence of willfulness. For instance, in the 1944 case *Enterprise Manufacturing Co. v. Shakespeare Co.*, the Sixth Circuit affirmed the ruling that the defendant's infringement was not willful and therefore did not warrant enhanced damages: "The patent in suit was sustained upon a narrow margin of validity, and it was not unreasonable for defendant to believe that the claims of the patent in this accounting were also invalid." 141 F.2d 916, 918 (6th Cir. 1944). In doing so, the circuit court emphasized the critical role willfulness plays in enhanced damages: "If honestly mistaken as to a reasonably debatable question of validity, an infringer should not be made to smart in punitive damages. Compensatory damages constitute adequate remuneration ...." *Id.* at 921.

Numerous circuit court decisions dating back over a century are in accord. *See, e.g.*, *Baumstimler v. Rankin*, 677 F.2d 1061, 1073 (5th Cir. 1982) (enhanced damages only warranted "when the infringement is willful and wanton"); *Wilden Pump & Eng'g Co. v. Pressed & Welded Prods. Co.*, 655 F.2d 984, 990 (9th Cir. 1981) (reversing enhanced damages because the evidence does "not support a finding that the appellants deliberately infringed"); *Union Carbide Corp. v. Graver Tank & Mfg. Co.*, 282 F.2d 653, 675 (7th Cir. 1960) ("[I]t is only on the basis of conscious and wilful infringement that exemplary or punitive damages are allowed ...."); *Power Specialty Co. v. Conn. Light & Power Co.*, 80 F.2d 874, 878 (2d Cir. 1936) ("There is no justification for punitive damages here as upon

wanton, deliberate, and willful infringement."); *Fox v. Knickerbocker Engraving Co.*, 165 F. 442, 444 (2d Cir. 1908) (affirming enhanced damages because the defendant "presented no evidence showing the invalidity of the patent and admitted infringement").

Since 1982, the Court of Appeals for the Federal Circuit has had exclusive jurisdiction over appeals relating to patents. In 2007, the court in *In re Seagate Technology, LLC*, 497 F.3d 1360 (Fed. Cir. 2007), established a test for determining whether enhanced damages may be awarded against an infringer. The court first noted that "we have held that an award of enhanced damages requires a showing of willful infringement" and "[t]his well-established standard accords with Supreme Court precedent," citing *Aro*, *Dowling*, and *Seymour*. *Id.* at 1368. It reviewed how the term "willfulness" had been used in the civil context, and it then created a two-part test to determine whether willful infringement had been established. The first prong of the test requires "clear and convincing evidence that the infringer acted despite an objectively high likelihood that its actions constituted infringement of a valid patent." *Id.* at 1371. If the first prong were satisfied, then "the patentee must also demonstrate that this objectively-defined risk (determined by the record developed in the infringement proceeding) was either known or so obvious that it should have been known to the accused infringer." *Id.*

While AIPLA disagrees with the Federal Circuit's two-part test for determining willfulness, *Seagate* is nonetheless another example of the

circuit courts holding that willfulness is not merely sufficient for enhanced damages, it is a necessary predicate.

II. Proof of Willful Infringement Should Require Only a Showing of the Subjective Bad Faith of the Infringer.

AIPLA urges this Court to adopt a standard for willful infringement that focuses on the subjective intent of the infringer at the time of infringement, and to reject the *Seagate* test. This subjective standard would comport with the punitive purpose of enhanced damages. As this Court has repeatedly cautioned, standards for punitive damages should be both exacting and precise. A totality of the circumstances approach fails to meet this Court's requirements for punitive damages. The *Seagate* standard, on the other hand, goes too far in requiring, in addition to subjective bad faith, an objective analysis of the infringer's positions developed at trial. AIPLA's proposal strikes the right balance by providing an exacting standard that can be consistently and predictably applied by the lower courts while also ensuring that sufficiently blameworthy conduct is punished.

A. Because enhanced damages are punitive, the standard for willfulness should be exacting and predictable enough to ensure consistent and restrained application by the lower courts.

Enhanced damages under Section 284 are punitive, not compensatory. *See Fla. Prepaid*

Postsecondary Educ. Expense Bd. v. Coll. Sav. Bank, 527 U.S. 627, 648 n.11 (1999) (describing as "punitive damages"); *Aro Mfg. Co. v. Convertible Top Replacement Co.*, 377 U.S. 476, 508 (1964) (describing as "punitive or 'increased' damages"); *Root v. Ry. Co.*, 105 U.S. 189, 196 (1881) (describing as "punitive damages"); *Seymour v. McCormick*, 57 U.S. (16 How.) 480, 489 (1854) (describing as "vindictive or exemplary damages"); *Union Carbide Corp. v. Graver Tank & Mfg. Co.*, 282 F.2d 653, 675 (7th Cir. 1960) (describing as "exemplary or punitive damages"). As such, enhanced damages are a "quasi-criminal" punishment. *Pac. Mut. Life Ins. Co. v. Haslip*, 499 U.S. 1, 19 (1991). They come with not only a monetary punishment that exceeds the plaintiff's actual damages, but also a "stigma" that publicly brands the infringer. *Id.* at 54 (O'Connor, J., dissenting) ("The punitive character of punitive damages means that there is more than just money at stake.").

Because enhanced damages represent a form of punitive damages, they should be awarded only for truly egregious and outrageous conduct. As this Court recently recognized, "[t]he prevailing rule in American courts ... limits punitive damages to cases of what the Court in [*Day v. Woodworth*, 54 U.S. (13 How.) 363, 371 (1852)] spoke of as 'enormity,' where a defendant's conduct is 'outrageous.'" *Exxon Shipping Co. v. Baker*, 554 U.S. 471, 493 (2008). "[W]illful, wanton, and reckless indifference for the rights of others, or behavior even more deplorable" is required. *Id.*; *see also Atl. Sounding Co. v. Townsend*, 557 U.S. 404, 409, 411 (2009) ("Punitive damages have long been an available remedy at

common law for wanton, willful, or outrageous conduct.... [P]unitive damages were available in maritime actions for tortious acts of a particularly egregious nature.").

The standard for willful infringement should also be precise enough that potential willful infringers can consider their intended conduct and weigh the risk of their actions.

> [A] penalty should be reasonably predictable ... so that even Justice Holmes's "bad man" can look ahead with some ability to know what the stakes are in choosing one course of action or another. And when the bad man's counterparts turn up from time to time, the penalty scheme they face ought to threaten them with a fair probability of suffering in like degree when they wreak like damage.

Exxon, 554 U.S. at 502. Without this predictability, enhanced damages cannot serve their intended deterrent function, and the justice system risks inflicting inconsistent and capricious punishments.

Given the seriousness of the conduct required and the punishment levied, the willfulness standard also should be exacting and predictable enough to ensure consistent and restrained application by the lower courts, while deterring the willful disregard of legitimate patent rights. This Court has stepped in when standards for punitive damages were too ambiguous and discretionary. "The real problem," this Court recently explained, "is the stark unpredictability of punitive awards," which raise

"concern[s] about punitive damages that 'run wild.'" *Id.* at 499; *Pac. Mut.*, 499 U.S. at 18. Due Process concerns come into play here as well because accused willful infringers face "quasi-criminal" penalties but "have not been accorded the protections applicable in a criminal proceeding." *State Farm Mut. Auto. Ins. Co. v. Campbell*, 538 U.S. 408, 417 (2003). This serves only to "increase[] [the] concerns over the imprecise manner in which punitive damages systems are administered." *Id.*; *see also Pac. Mut.*, 499 U.S. at 54 (O'Connor, J., dissenting) ("This factor militates in favor of strong procedural safeguards.").

The Federal Circuit in *Seagate* sought to correct a lax and unpredictable standard (of its own doing) that persisted in the twenty years prior, starting with *Underwater Devices, Inc. v. Morrison-Knudsen Co.*, 717 F.2d 1380 (Fed. Cir. 1983). *Seagate*, 497 F.3d 1360, 1371 (Fed. Cir. 2007). Prior to *Seagate*, the Federal Circuit's standard for proving willfulness was much easier to meet, and the court imposed an affirmative duty on the part of the would-be infringer to investigate patents of which it was aware or be presumed to have willfully infringed. *Id.* at 1368-69.[3] The Federal Circuit's prior standard set too low a bar, was inconsistently applied, and sometimes resulted in erratic behavior such as avoidance of review of competitors' patents. *Id.* at 1371 ("This standard fails to comport with the

---

[3] In addition to the Federal Circuit's overruling of *Underwater Devices* in *Seagate*, Congress enacted a statute to prohibit use of the fact that an opinion of counsel was not sought as evidence of willfulness infringement. 35 U.S.C. § 298.

general understanding of willfulness ... and it allows for punitive damages in a manner inconsistent with Supreme Court precedent."). As a result, enhanced damages were almost always sought and routinely awarded. *See* Kimberly A. Moore, *Empirical Statistics on Willful Patent Infringement*, 14 Fed. Cir. B.J. 227, 232, 236 (2004) (92.3% of cases alleged willfulness and 55.7% of cases where the issue was presented to the fact finder resulted in a finding of willfulness).

The state of the law prior to *Seagate* not only punished conduct that should not be considered blameworthy, but it also subverted an aim of the patent system: to encourage widespread knowledge of patents and allow the public to learn from improvements in the state of the art. The prior system encouraged willful blindness of the patents that had been issued so as to avoid being tagged with treble damages. Lawyers encouraged their clients not to read patents to avoid the potential for enhanced damages in future patent infringement actions. *See* Fed. Trade Comm'n, *To Promote Innovation: The Proper Balance of Competition and Patent Law and Policy* 16 (October 2003), https://www.ftc.gov/sites/default/files/documents/reports/promote-innovation-proper-balance-competition-and-patent-law-and-policy/innovationrpt.pdf (noting that participants at the FTC-DOJ hearing held in November 2002 testified that they do not read their competitors' patents out of fear of treble damages).

The Federal Circuit was right to overturn its prior precedent on enhanced damages and adopt a

more stringent and precise standard. But the new test introduced problems of its own.

B. The *Seagate* standard goes too far, allowing blameworthy conduct to go unpunished.

The *Seagate* standard satisfies the two criteria for punitive damages in that it is exacting and it can be applied predictably. The problem with the test is that it can be too exacting, in some cases allowing truly egregious conduct to remain unpunished.

The difficulty lies with the first part of the test — the so-called objective prong. Before inquiring into the subjective intent of the infringer, the Federal Circuit first requires determining whether the infringer's defenses raised during the litigation are objectively unreasonable. *Seagate*, 497 F.3d at 1371. Where an infringer raises an objectively reasonable defense, the inquiry ends, and enhanced damages may not be awarded regardless of the infringer's subjective intent. *Id.*

This has the unfortunate potential to allow the taint of reprehensible conduct to be cleansed by post-hoc legal strategizing. If, for example, the infringer believed at the time of infringement that its conduct was infringing, but, long after the fact, its litigation counsel developed non-infringement or invalidity positions that were at least objectively reasonable, this would be enough to negate an award of enhanced damages. The defendant's knowing and willful infringement, possibly extending over years, would go unpunished.

The Federal Circuit's objective prong undermines the deterrent purpose of enhanced damages. *See Exxon*, 554 U.S. at 492 ("[P]unitives are aimed ... principally at retribution and deterring harmful conduct."). Defenses developed by litigation counsel after the infringement occurred played no role in the defendant's decision to engage in the infringement in the first place. If Section 284 is to deter would-be infringers, it should focus on what the defendant knew or chose to ignore at the time of the decision to infringe or to continue to infringe. Otherwise, Justice Holmes's "bad man" might knowingly infringe, hoping that skilled litigation counsel can devise a plausible defense when the defendant's day of reckoning finally arrives.

C. A subjective bad faith standard is more consistent with this Court's precedents and the purpose of enhanced damages.

When the Federal Circuit was considering the proper standard for willfulness in *Seagate*, AIPLA submitted an amicus brief urging the court to adopt a subjective bad faith standard. AIPLA maintains that the standard it recommended to the Federal Circuit in *Seagate* should be applied by this Court as the test for willfulness.

Under this proposed standard, the operative question is whether, at the time of infringement, the defendant had a good faith belief that either it was not infringing or the patent was invalid. Evidence of bad faith could include (1) the infringer continuing to infringe after receiving a detailed written notice of infringement from the patentee; (2) the infringer

intentionally copying the patented invention with knowledge that it was patented; and/or (3) the infringer engaging in conduct not colorably different from conduct previously found to have infringed the patent. The focus should be on the good faith of those who made the decision to make, use, or sell the infringing article or process. If the infringer is a company, especially a large company with many employees, the focus should be on the knowledge of the people making the decisions that lead to infringement. Knowledge of a patent by an employee who is not involved in the decisions that led to infringement should not be imputed to the entire company.

Evidence of bad faith could be countered with evidence that at the time of infringement the defendant had an informed good faith belief that the patent was invalid or not infringed. For instance, an opinion of counsel obtained at the time of infringement should be strong presumptive evidence of the defendant's informed good faith belief. An opinion would establish that the defendant, upon notice of the patent and before continuing to infringe it, conducted a thorough and reasoned analysis of the patent and concluded in good faith that the patent was invalid or its conduct did not infringe.[4]

---

[4] Failure to obtain an opinion of counsel cannot be used to prove willful infringement. 35 U.S.C. § 298. There is no prohibition in section 298, however, on using an opinion of counsel as evidence of good faith.

As another example, evidence that the defendant, upon learning of the asserted patent, petitioned the USPTO for *inter partes* review, and that the review was thereafter instituted, should be presumptive evidence of a good faith belief that the patent claims allegedly infringed are not valid. Such cautious and responsible behavior would neither be egregious nor outrageous. A court reviewing this evidence should be able to grant summary judgment to dismiss a willfulness claim on the basis of presumptive evidence of good faith.

AIPLA does not propose that objective considerations be entirely discounted. The reasonableness of the infringer's invalidity or non-infringement positions could be relevant to whether the infringer acted in bad faith. Advancing particularly weak or frivolous positions would, for instance, support a finding that the infringer did not truly believe that its conduct was permitted. Conversely, strong invalidity or non-infringement defenses could indicate that the infringer acted in good faith. But the objective strength of the infringer's position should only be relevant if the infringer considered the defense at the time of infringement. Evidence uncovered and arguments developed only after the infringing conduct played no role in the infringer's decision to infringe, and therefore should play no role in the willfulness determination.

AIPLA's proposal is consistent with this Court's requirements for punitive damages. By requiring bad faith — i.e., intentional pirating or conscious disregard for a known risk of infringement — the

proposal limits enhanced damages to only egregious conduct. Subjective bad faith offers a clear, precise, and predictable standard against which Justice Holmes's "bad man" can reliably assess the risks associated with his contemplated infringement. Courts routinely determine the mental state of alleged wrongdoers in many different civil and criminal contexts. They are equally equipped to do so in this context.

AIPLA's proposal also is consistent with this Court's precedents regarding enhanced damages. Willfulness is routinely contrasted with good faith, making bad faith the appropriate determinant for willfulness. *See, e.g.*, *Seymour v. McCormick*, 57 U.S. (16 How.) 480, 488 (1854) (it is unjust to levy enhanced damages against "[t]he defendant who acted in ignorance or good faith"); *see also Egry Register Co. v. Standard Register Co.*, 23 F.2d 438, 443 (6th Cir. 1928) ("[W]e find no basis for any conclusion that the infringement was willful in any such sense as to justify the statutory increase of damages. Both as to validity and infringement there was doubt sufficient to support the good faith of a belief ....").

Bad faith and willfulness are generally defined similarly as involving a conscious, versus a negligent or careless, act; one in conscious disregard of a legal obligation. *See, e.g.*, *Black's Law Dictionary* 127, 1434 (5th ed. 1979) (Bad faith: "[I]t is different from the negative idea of negligence in that it contemplates a state of mind affirmatively operating with furtive design or ill will."; Willful: "An act or omission ... done voluntarily and intentionally and

with the specific intent to do something the law forbids, or with the specific intent to fail to do something the law requires to be done; that is to say, with bad purpose either to disobey or disregard the law.") In both cases, there must be a conscious purpose to perform an act rather than simple negligence or inadvertence.

And when both concepts, bad faith and willfulness, are placed in the context of the act of patent infringement, they arrive at the same endpoint. AIPLA does not propose that any act of bad faith expose an infringer to enhanced damages. Rather, the question is whether the defendant *infringed the patent* in bad faith. That is, did the defendant engage in the infringing conduct without an informed good faith belief that he had the right to do so, because the patent was invalid or not infringed? Bad faith associated with, for instance, litigation or patent prosecution misconduct would not be relevant. In this context, bad faith infringement means the same as willful infringement, i.e., "[a]n act [of patent infringement] ... done ... with the specific intent to do something the law forbids," namely, infringe a valid patent. *Black's Law Dictionary* 1434 (definition of "willful").

The focus on subjective intent is also consistent with this Court's and Congress' use of terms referring to the infringer's state of mind, including the term "willful" itself, which speaks of the infringer's subjective will. *See, e.g., Seymour*, 57 U.S. (16 How.) at 489 ("wanton and malicious pirate"); *Fla. Prepaid Postsecondary Educ. Expense Bd. v. Coll. Sav. Bank*, 527 U.S. 627, 663 n.15 (1999)

(Stevens, J., dissenting) ("wanton disregard of the patentee's patent rights"); *Recovery in Patent Infringement Suits: Hearing on H.R. 5231 before the H. Comm. on Patents*, 79th Cong. 9-10 (1946) ("deliberate attempt of capturing the market which has been established under the patent"); *see also Enter. Mfg. Co. v. Shakespeare Co.*, 141 F.2d 916, 920-21 (6th Cir. 1944) ("Compensatory damages constitute adequate remuneration ... unless ... the infringer ... is consciously wrongful."); *Overman Cushion Tire Co. v. Goodyear Tire & Rubber Co.*, 66 F.2d 361, 362 (2d Cir. 1933) ("[T]he infringement by the appellant was conscious and deliberate.").

D. A totality of the circumstances standard is inconsistent with the purpose of enhanced damages.

Set against this Court's requirements for justifying an award of punitive damages, a totality of the circumstances test should be rejected. Such a standard would give district courts unbounded discretion when determining willfulness. Such discretion would invariably produce divergent outcomes among the district courts, leading to "stark unpredictability" and "imprecision" that have no place in punitive damages awards. Also, such a standard threatens to turn back the clock and reverse the Federal Circuit's progress in confining enhanced damages to blameworthy conduct.

This Court's decision in *Octane Fitness, LLC v. ICON Health & Fitness, Inc.*, 134 S. Ct. 1749 (2014), which concerned fee shifting under Section 285, does not give occasion to change the law. While an award

of attorney's fees is often a sanction to police misconduct during litigation, the purpose and measure of such awards are compensatory, not punitive. *See Kilopass Tech., Inc. v. Sidense Corp.*, 738 F.3d 1302, 1313 (Fed. Cir. 2013) ("[I]t is clear that the aim of § 285 is to compensate a defendant for attorneys' fees it should not have been forced to incur. The aim is not to punish a plaintiff for bringing those claims."). The reasoning of *Octane Fitness*, and its goal of providing the district courts greater discretion in managing patent litigation, therefore does not apply. By the same token, the need for predictable and consistent application of punitive damages awards under Section 284 does not apply to compensatory fee shifting under Section 285. Given their divergent purposes, the standards for fee shifting and enhanced damages should not be artificially equated.

There are other reasons why the Court's reasoning and approach in *Octane Fitness* should not apply here. This Court rejected the *Brooks Furniture* test, 393 F.3d 1378 (Fed. Cir. 2005), in part because the Federal Circuit in that case erroneously engrafted an "exceptional case" standard for Section 285 from the antitrust case *Professional Real Estate Investors, Inc. v. Columbia Pictures Industries, Inc.*, 508 U.S. 49 (1993) ("*PRE*"), which addressed the application of the "sham litigation" exception to *Noerr-Pennington* immunity. 134 S. Ct. at 1757. The First Amendment issues present in antitrust cases require crafting a narrow exception to immunity, but there was no similar First Amendment concern with respect to fee shifting under Section 285. *Id.* This alone was sufficient

reason to question the premise underlying the Federal Circuit's jurisprudence. In the present case, as discussed above, the proposed test for Section 284 follows the long line of Supreme Court precedent, has not been lifted improperly from another area of jurisprudence, and does not rest on the Court's decision in *PRE*.

This Court also reasoned in *Octane Fitness* that the Federal Circuit's standard for fee shifting rendered Section 285 superfluous in view of other fee shifting mechanisms. *Id.* at 1758. Not so for Section 284, which is the only means of awarding enhanced damages for patent infringement.

Another distinction is that in *Octane Fitness*, this Court was addressing a specific issue of statutory construction: the meaning of the word "exceptional" in Section 285. The Court ascribed the word its ordinary meaning. *Id.* at 1756. The legislative history of Section 285 strongly supported the ordinary meaning, emphasizing Congress's intent to create a broad, discretionary standard to achieve a compensatory purpose. The courts applied Section 285 as such until *Brooks Furniture*. *See id.* at 1754 ("[T]he Federal Circuit, like the regional circuits before it, instructed district courts to consider the totality of the circumstances ...."); *see also* Patent Act of 1946, ch. 726, § 4921, 60 Stat. 778 (1946) (the predecessor of Section 285 stated, "The court may ***in its discretion*** award reasonable attorney's fees." (emphasis added)); S. Rep. No. 79-1503 (1946), *reprinted in* 1946 U.S.C.C.A.N. 1386, 1387 (predecessor of Section 285 enacted "so as to enable the court to prevent a gross injustice").

Affording the district courts broad discretion to compensate a prevailing party through fee shifting is not, however, the purpose of Section 284's provision authorizing courts to award enhanced damages. As discussed above, Congress intended that enhanced damages be awarded only as punishment for willful infringement. Nearly 200 years of judicial precedent support this narrowly restrained application. This Court should not woodenly superimpose the outcome of its entirely different analysis in *Octane Fitness* to interpret Section 284.

There is a place for the exercise of discretion in the standard for enhanced damages, but that place comes after willfulness has been established. Once the defendant's conduct is found to be sufficiently egregious to warrant punitive damages, the district court has discretion to award or deny enhanced damages under the Federal Circuit's precedent. *See i4i Ltd. P'ship v. Microsoft Corp.*, 598 F.3d 831, 859 (Fed. Cir. 2010). This accounts for and gives meaning to the discretionary term "may award" that appears in Section 284.

CONCLUSION

For the foregoing reasons, AIPLA respectfully requests that the Court reject the Federal Circuit's *Seagate* test and reaffirm is longstanding precedent that district courts can award enhanced damages under Section 284 if and when, at the time of infringement, the infringer acted in subjective bad faith.

Respectfully submitted,

LISA K. JORGENSON,
Executive Director
AMERICAN INTELLECTUAL
PROPERTY LAW
ASSOCIATION
241 18th Street, South
Suite 700
Arlington, VA 22202
(703) 415-0780

PETER A. SULLIVAN
Counsel of Record
FOLEY HOAG LLP
1540 Broadway, 23rd Fl.
New York, NY 10036
(646) 927-5500
psullivan@foleyhoag.com

DONALD R. WARE
STEPHEN T. BYCHOWSKI
FOLEY HOAG LLP
155 Seaport Boulevard
Boston, MA 02210
(617) 832-1000

December 16, 2015

Supreme Court, U
FILED
DEC 16 20
OFFICE OF THE CL

Nos. 14-1513 & 14-1520

IN THE

Supreme Court of the United States

HALO ELECTRONICS, INC., *Petitioner*,
v.
PULSE ELECTRONICS, INC., ET AL., *Respondents*.

STRYKER CORPORATION, ET AL., *Petitioners*,
v.
ZIMMER, INC., ET AL., *Respondents*.

On Writs of Certiorari
to the United States Court of Appeals
for the Federal Circuit

BRIEF OF *AMICUS CURIAE* ASKELADDEN LLC IN SUPPORT OF NEITHER PARTY

WILLIAM M. JAY
BRIAN T. BURGESS
GOODWIN PROCTER LLP
901 New York Ave., N.W
Washington, DC 20001

KEVIN J. CULLIGAN
Counsel of Record
GOODWIN PROCTER LLP
New York Times Building
620 Eighth Avenue
New York, NY 10018
kculligan@goodwinprocter.com
(212) 813-8800

Counsel for Amicus Curiae

December 16, 2015

TABLE OF CONTENTS

Page

TABLE OF AUTHORITIES ii

INTEREST OF THE *AMICUS CURIAE* 1

SUMMARY OF ARGUMENT 3

ARGUMENT 6

I. Parties Should Not Be Exposed To Punitive Damages Under Section 284 Absent Willful Infringement 6

A. Section 284 Incorporates The Patent Law's Established Reservation Of Punitive Damages For Acts Of Willful Infringement 7

B. Section 284 Creates A Species Of Punitive Damages, And The Willfulness Requirement Is Consistent With The Ordinary Rule For Punitive Damages 12

C. Discarding The Willfulness Requirement Would Discourage Innovation 14

II. The Court's Test Should Protect Parties That Acted In Good Faith Based On A Reasonable Belief That They Were Not Infringing A Valid Patent 19

A. Objective Reasonableness Should Play An Important Role In Any Test For Increasing Infringement Damages 20

B. Enhanced Damages Awards For Patent Infringement Should Be Susceptible Of Meaningful Appellate Review 29

CONCLUSION 32

TABLE OF AUTHORITIES

PAGE(S)

CASES:

Aro Mfg. Co. v. Convertible Top Replacement Co., 377 U.S. 476 (1964) 9, 12

Artmoore Co. v. Dayless Mfg. Co., 208 F.2d 1 (7th Cir. 1953) 21, 25

Beatrice Foods Co. v. New England Printing & Lithographing Co., 923 F.2d 1576 (1991) 10-11, 12

Birdsall v. Coolidge, 93 U.S. (3 Otto) 64 (1876) 31

BMW of N. Am., Inc. v. Gore, 517 U.S. 559 (1996) 13

Bridgeport Music, Inc. v. UMG Recordings, Inc., 585 F.3d 267 (6th Cir. 2009) 25

Brodie v. Ophir Silver Min. Co., 4 F. Cas. 202 (C.C.D. Cal. 1867) 8

Commil USA, LLC v. Cisco Sys., Inc., 135 S. Ct. 1920 (2015) 3, 14, 16, 18

Cooper Indus., Inc. v. Leatherman Tool Grp., Inc., 532 U.S. 424 (2001) 29

Day v. Woodworth,
54 U.S. (13 How.) 363 (1851) 14

Dowling v. United States,
473 U.S. 207 (1985) 9

Eltra Corp. v. Basic, Inc.,
599 F.2d 745 (6th Cir. 1979) 10

Enterprise Mfg. Co. v. Shakespeare Co.,
141 F.2d 916 (6th Cir. 1944) 21, 25, 26

Exxon Shipping Co. v. Baker,
554 U.S. 471 (2008) 12, 14

Feltner v. Columbia Pictures Tel., Inc.,
523 U.S. 340 (1998) 31

Fogerty v. Fantasy, Inc.,
510 U.S. 517 (1994) 22

FTC v. Actavis, Inc.,
133 S. Ct. 2223 (2013) 15, 16

Global-Tech Appliances, Inc. v. SEB S.A.,
131 S. Ct. 2060 (2011) 24

Goodyear Tire & Rubber Co. v. Overman Cushion Tire Co.,
95 F.2d 978 (6th Cir. 1937) 8

Highmark Inc. v. Allcare Health Management Systems, Inc.,
134 S. Ct. 1744 (2014) 30, 31

Knorr-Bremse Systeme Fuer Nutzfahrzeuge GmbH v. Dana Corp., 383 F.3d 1337 (Fed. Cir. 2004) 27

Lam, Inc. v. Johns-Manville Corp., 668 F.2d 462 (10th Cir. 1982) 9

Lam, Inc. v. Johns-Manville Corp., 718 F.2d 1056 (Fed Cir. 1983) 13

Markman v. Westview Instruments, Inc., 517 U.S. 370 (1996) 29

In re Maxim Integrated Prods., Inc., MDL No. 2354, 2015 WL 867651 (W.D. Pa. Feb. 27, 2015) 18

McLaughlin v. Richland Shoe Co., 486 U.S. 128 (1988) 21

Microsoft Corp. v. i4i Ltd. P'ship, 131 S. Ct. 2238 (2011) 7, 9

Miles v. Apex Marine Corp., 498 U.S. 19 (1990) 7

Nat'l Presto Indus., Inc. v. West Bend Co., 76 F.3d 1185 (Fed. Cir. 1996) 31

Octane Fitness, LLC v. Icon Health & Fitness, Inc., 134 S. Ct. 1749 (2014) 30

On Davis v. Gap, Inc.,
246 F.3d 152 (2d Cir. 2001) 23

Pac. Mut. Life Ins. Co. v. Haslip,
499 U.S. 1 (1991) 29

Power Specialty Co. v. Conn. Light & Power Co.,
80 F.2d 874 (2d Cir. 1936) 8

Read Corp. v. Portec Inc.,
970 F.2d 816 (1992) ..... *passim*

Rockwood v. Gen. Fire Extinguisher Co.,
37 F.2d 62 (2d Cir. 1930) 8, 21

Root v. Lake Shore & M.S. Ry. Co.,
105 U.S. (15 Otto) 189 (1881) 12

Safeco Ins. Co. of Am. v. Burr,
551 U.S. 47 (2007) 5, 21, 22, 25

Saturn Mfg., Inc. v. Williams Patent Crusher & Pulverizer Co.,
713 F.2d 1347 (8th Cir. 1983) 10

In re Seagate Technology, LLC,
497 F.3d 1360 (2007) 4, 10, 11

Seymour v. McCormick,
57 U.S. (16 How.) 480 (1853) ..... *passim*

Sony BMG Music Entm't v. Tenebaum,
660 F.3d 487 (1st Cir. 2011) 23

Spectralytics, Inc. v. Cordis Corp.,
649 F.3d 1336 (Fed. Cir. 2011) 30

State Farm. Mut. Auto. Ins. Co. v. Campbell,
538 U.S. 408 (2003) 13

Tex. Dep't of Hous. & Cmty. Affairs v. Inclusive Communities Project,
135 S. Ct. 2507 (2015) 11-12

Trans World Airlines, Inc. v. Thurston,
469 U.S. 111 (1985) 22

Trio Process Corp. v. L. Goldstein's Sons, Inc.,
638 F.2d 661 (3d Cir. 1981) 10

Union Carbide Corp. v. Graver Tank & Mfg. Co.,
282 F.2d 653 (7th Cir. 1960) 10

Warner-Jenkinson Co. v. Hilton Davis Chem. Co.,
520 U.S. 17 (1997) 15

Wilden Pump & Eng'g Co. v. Pressed & Welded Prods. Co.,
655 F.2d 984 (9th Cir. 1981) 10, 21

Yoder Bros, Inc. v. Cal.-Fla. Plant Corp.,
537 F.2d 1347 (5th Cir. 1976) 10

STATUTES:

15 U.S.C. § 1681(a) 22

17 U.S.C. § 504(c)(2) 23

29 U.S.C. § 626(b) 22

35 U.S.C. § 271(e)(4) 16

35 U.S.C. § 284 ..... *passim*

35 U.S.C. § 285 30

35 U.S.C. § 298 ..... 4, 11, 27

Act of July 4, 1836, ch. 357, § 14, 5 Stat. 117 7

Act of July 8, 1870, ch. 230, § 55, 16 Stat. 198 8

OTHER AUTHORITIES:

7 Chisum on Patents (2015) 11, 15, 19

A. Davis & K. Jesien, *The Balance of Power in Patent Law: Moving Towards Effectiveness in Addressing Patent Troll Concerns*, 22 Fordham Intell. Prop. Media & Ent. L. J. 835 (2012) 16

R. Harmon, *Harmon on Patents* (2007) 15

J. Lerner, *The Litigation of Financial Innovations*, 53 J. L. & Econ. 807 (2010) 17

Complaint, *Maxim Integrated Prods., Inc. v. Bank of Am. Corp.*, No. 12-cv-617-RAS (E.D. Tex. Oct. 1, 2012), ECF No. 1 ..... 17, 24

Complaint for Patent Infringement, *Maxim Integrated Prods., Inc. v M&T Bank Corp.*, No. 15-cv-02167-DLC (S.D.N.Y. Mar. 23, 2015), ECF No. 1 18

Complaint for Patent Infringement, *Maxim Integrated Prods., Inc. v. HSBC Bank USA, N.A.*, No. 15-cv-02168-DLC (S.D.N.Y. Mar. 23, 2015), ECF No. 1 18

Complaint for Patent Infringement, *Maxim Integrated Prods., Inc. v. Santander Bank, N.A.*, No. 15-cv-02169-DLC (S.D.N.Y. Mar. 23, 2015), ECF No. 1 18

Order of Discontinuance, *Maxim Integrated Prods., Inc. v. M&T Bank Corp.*, No. 15-cv-02167-DLC (S.D.N.Y. Oct. 30, 2015), ECF No. 57 18

D. Owen, *Punitive Damages in Products Liability Litigation*, 74 Mich. L. Rev. 1257 (1976) 12

J. Pegram, *The Willful Patent Infringement Dilemma and the 7th Amendment*, 86 J. Pat. & Trademark Off. Soc'y 271 (2004) 31

D. Prati, In re Seagate Technology LLC: *A Clean Slate for Willfulness*, 23 Berkeley Tech. L.J. 47 (2008) 24, 25

3 W. Robinson, *Law of Patents* (1890) 27

C. Seaman, *Willful Infringement and Enhanced Damages After* In re Seagate*: An Empirical Study*, 97 Iowa L. Rev. 417 (2012) 19, 29

INTEREST OF THE *AMICUS CURIAE*

Askeladden L.L.C. is an education, information, and advocacy organization dedicated to improving the understanding, use, reliability, and quality of patents pertinent to financial services and other industries. Askeladden seeks to improve the United States patent system by, among other things, submitting *amicus curiae* briefs directed to important issues of patent law. *E.g.*, *Commil USA, LLC v. Cisco Sys., Inc.*, No. 13-896.[1]

Askeladden is a wholly owned subsidiary of The Clearing Housing Payments Company L.L.C. Established in 1853, The Clearing House is the oldest banking association and payments company in the United States. It is owned by the world's largest commercial banks, which collectively hold more than half of all deposits in the United States and that employ more than one million people in the United States and more than two million people worldwide. The Clearing House clears almost $2 trillion each day, which represents nearly half of all automated clearing house, funds transfer, and check-image payments made in the United States. Its affiliate, The Clearing House Association L.L.C., is a nonpartisan advocacy organization that advances the interests of its owner banks by promoting and developing policies that support a safe, sound, and competitive banking system.

---

[1] Askeladden states that: (i) no counsel for a party authored this brief in whole or in part; and (ii) no person other than the *amicus curiae* or its counsel financially contributed to the preparation of this brief. All parties have consented to the filing of this brief.

Askeladden believes that a strong patent system is vital for continued economic growth; indeed, many of the member banks of The Clearing House own patents that relate to financial products and services. Askeladden also believes, however, that it would unreasonably chill innovation if punitive damages for infringement were imposed on companies that develop their products in good faith. Thus, although Askeladden takes no position on the questions whether the Federal Circuit's specific two-part test for enhanced damages is sound or whether the Federal Circuit correctly held that punitive damages are not available in either of the cases before the Court, Askeladden has a strong interest with respect to whether the Court retains the traditional patent law requirement that only willful patent infringers can be subject to increased damages under 35 U.S.C. § 284.

Significantly for Askeladden and the member banks of The Clearing House, a willfulness requirement provides an important check against patent abuse. In recent years, some entities have made a business out of acquiring patents (without regard to quality) and then threatening and bringing suit against dozens or even hundreds of companies that use products or business methods with a tenuous connection to the claimed inventions in order to extract settlement payments. Financial services companies have been common targets for these abusive practices, as plaintiffs take advantage of the enormous exposure created by the sheer volume of transactions in which financial services companies and their customers engage. If willfulness were eliminated as a gatekeeping requirement,

leaving individual district court judges with open-ended discretion to treble damages for ordinary patent infringement, it would encourage patent abuse by increasing the leverage patentees have to coerce defendants to settle even dubious claims.

Askeladden urges the Court to: (1) reject petitioners' invitations to fundamentally change the basis upon which enhanced damages are awarded for patent infringement, and (2) ensure that whatever rule it adopts will protect defendants acting in good faith from exposure to treble damages.

SUMMARY OF ARGUMENT

For well over a century, courts have limited awards of enhanced damages in patent cases to instances of willful infringement. When paired with strict liability for infringement, this settled rule balances the patent law's interests in rewarding innovation while encouraging legitimate competition and good-faith challenges to questionable patents. On the one hand, patentees receive full compensation for the unlicensed use of their inventions without regard to fault. *See* 35 U.S.C. § 284; *Commil USA, LLC v. Cisco Sys., Inc.*, 135 S. Ct. 1920, 1926 (2015). On the other hand, defendants are only subject to *extra* damages beyond the amount needed to provide compensation if the defendants' conduct is actually culpable and deserves punishment. *See* Part I.A., *infra*.

Petitioners ask the Court to uproot established law and expose every accused infringer to treble damages under 35 U.S.C. § 284 without regard to willfulness and subject only to a district judge's open-ended discretion. Petitioners make this argument in

the course of attacking the Federal Circuit's two-part test for willful infringement first set forth in *In re Seagate Technology, LLC*, 497 F.3d 1360 (2007). Whether the Federal Circuit's latest test properly implements the statute is a distinct question, however, from whether the statute allows increased damages without willfulness. On that broader question, the unequivocal answer is "no."

The text of section 284 is spare, but the statutory language is given content by the historical precedent Congress built on when enacting the provision in the 1952 Patent Act. Before 1952, courts interpreted the linguistically similar precursor to section 284 to provide district courts with discretion to increase damages only when the defendant's infringement was willful. *See* pp. 8-9, *infra*. There is no evidence that Congress intended to depart from this settled rule when it enacted section 284, and courts over the next 60 years repeatedly reaffirmed it. *See* pp. 9-11, *infra*. Moreover, to the extent there could have been any doubt about the proper interpretation of section 284, Congress eliminated it by adopting a new patent law provision that presupposes and ratifies the willfulness requirement. *See* 35 U.S.C. § 298; pp. 11-12, *infra*.

The established interpretation of section 284 also advances the patent law's objectives. Section 284 authorizes punishment through treble damages, and courts generally impose punitives only for truly culpable conduct. *See* Part I.B., *infra*. In addition, discarding willfulness as a threshold requirement would upset the balance of the patent law by penalizing good-faith patent challenges and honest

(and pro-competitive) attempts to design around patents. It would also encourage further patent litigation abuse—a problem that disparately impacts the financial services industry and imposes a significant tax on financial innovation for widely used products like mobile banking services on smartphones. *See* pp. 17-18, *infra*. Even under current law, companies in the financial services industry are plagued by blanket demand letters asserting vague and often spurious claims of patent infringement, generally with the goal of extracting settlement payments. *Id.* at 16-17. Making punitive damages routinely available in infringement cases is likely to make a serious problem worse by increasing the leverage patentees have to coerce settlement payments from defendants that have little choice other than to pay the price of peace.

If the Court rejects the Federal Circuit's specific *In re Seagate* test, it should not eliminate willfulness as a threshold requirement for increased damages under section 284. The Court should recognize that the assertion of objectively reasonable defenses generally preclude a court from concluding that the defendant infringed the patent willfully. Once again, courts for decades have rejected punitive damages for patent infringement in the face of an objectively reasonable defense. *See* p. 21, *infra*. In other contexts, this Court and the courts of appeals repeatedly have held that defendants do not "willfully" violate the law if they rely on an objectively reasonable defense. *See, e.g.*, *Safeco Ins. Co. of Am. v. Burr*, 551 U.S. 47, 69-70 & n.20 (2007); *see* pp. 21-23, *infra*.

Even if the Court decides that there is merit to petitioners' argument that plausible (but pretextual) defenses should not foreclose eligibility for enhanced damage awards, their objection can be addressed without upending the law. The Court could allow patentees to demonstrate that an accused infringer acted in bad faith and did not actually believe its litigation-driven defense at the time it engaged in the infringing conduct. Relevant considerations to establish bad faith should include: (1) whether the defendant deliberately copied an invention after it was patented; (2) whether the defendant attempted to conceal its infringing conduct; and (3) whether the defendant had a motivation to injure the patentee, as in cases involving commercial rivals. *See* pp. 20, 26-28, *infra*. Any test the Court adopts should allow meaningful appellate review of a district court's decision to increase damages in order to ensure some degree of national consistency with respect to how punitive damages are awarded in patent cases.

ARGUMENT

I. Parties Should Not Be Exposed To Punitive Damages Under Section 284 Absent Willful Infringement

The Federal Circuit's two-part test for evaluating willful infringement set forth by *In re Seagate* is of recent vintage, but the underlying willfulness requirement for enhanced damages is not. This Court, the Federal Circuit, and the regional courts of appeals before it have held that increased damages for patent infringement are only available in cases of willful infringement. Regardless of whether the

Court agrees with the Federal Circuit's current gloss on willfulness, it should not take the further step of uprooting the settled willfulness requirement altogether as petitioners advocate.

A. Section 284 Incorporates The Patent Law's Established Reservation Of Punitive Damages For Acts Of Willful Infringement

Section 284 provides that courts, "upon finding" for a patent claimant, "shall award . . . damages adequate to compensate for the infringement." 35 U.S.C. § 284. A separate clause adds that the court "may increase the damages" for patent infringement "up to three times the amount found or assessed." *Ibid.* The spare language used by Congress in the second clause to authorize enhanced damages must be read in historical context. Congress is always presumed to be "aware of" such context "when it passes legislation," *Miles v. Apex Marine Corp.*, 498 U.S. 19, 32 (1990), and the 1952 Patent Act reflected particularly keen attention to existing interpretations of patent law, as this Court has repeatedly made clear, *see, e.g.*, *Microsoft Corp. v. i4i Ltd. P'ship*, 131 S. Ct. 2238, 2246 (2011).

1. Congress enacted the precursor to section 284 in 1836. In that statute, Congress shifted away from mandatory trebling for patent infringement and instead gave courts "the power" to impose up-to treble damages in actions at law "according to the circumstances." Act of July 4, 1836, ch. 357, § 14, 5 Stat. 117. An 1870 amendment provided courts sitting in equity with the "same powers" to award

enhanced damages. Act of July 8, 1870, ch. 230, § 55, 16 Stat. 198.

From the beginning, courts recognized that the predecessor statute did not grant unlimited discretion to enhance damages. As this Court explained, increased damages were available under the statute specifically to "inflict vindictive or punitive damages" in cases where the injury from infringement was "wanton or malicious." *Seymour v. McCormick*, 57 U.S. (16 How.) 480, 489 (1853). Courts of appeals, in turn, recognized that the "vindictive or punitive damages" authorized by the statute were reserved for cases of willful infringement. Stryker erroneously claims that these courts "treated willfulness only as a *sufficient* condition for enhancement, not as a *necessary* condition." Stryker Br. 34. To the contrary, over a course of decades, courts repeatedly rejected increased damages in cases where infringement was not willful. *See, e.g.*, *Goodyear Tire & Rubber Co. v. Overman Cushion Tire Co.*, 95 F.2d 978, 986 (6th Cir. 1937) (instructing that "no punitive damages shall be assessed" on remand unless the court found the defendant "was guilty of conscious and deliberate infringement" (quotation marks omitted)); *Power Specialty Co. v. Conn. Light & Power Co.*, 80 F.2d 874, 878 (2d Cir. 1936) ("no justification for punitive damages" absent "wanton, deliberate, and willful infringement"); *Rockwood v. Gen. Fire Extinguisher Co.*, 37 F.2d 62, 66 (2d Cir. 1930) ("Punitive damages should not have been awarded by the court below" because "[t]he infringement was not wanton and deliberate"); *Brodie v. Ophir Silver Min. Co.*, 4 F. Cas. 202, 203-04 (C.C.D. Cal. 1867) (No. 1,919) (Field,

J.) (discretion to increase damages "should only be exercised to remunerate parties who have been driven to litigation to sustain their patents by wanton and persistent infringement").

Congress enacted the 1952 Patent Act against that backdrop. Although the text of section 284 does not "reiterate" a willfulness requirement "expressly," there is no basis to "conclude that Congress intended to 'drop'" this established standard. *i4i*, 131 S. Ct. at 2246 (holding that the Patent Act incorporated the established standard of proof for invalidity even though the statutory text did not do so "expressly"). Indeed, far from announcing a departure from the century-old standard for increasing damages, the new section 284's "stated purpose was merely" to "reorganiz[e]" text previously found in multiple statutory provisions. *Aro Mfg. Co. v. Convertible Top Replacement Co.*, 377 U.S. 476, 505 n.20 (1964).

Courts after 1952, not surprisingly, continued to hold that enhanced damages under section 284 are available only in cases of willful infringement. In *Aro Manufacturing*, this Court explained that section 284 allows for "punitive or 'increased' damages" in cases "of willful or bad-faith infringement." 377 U.S. at 508; *see also Dowling v. United States*, 473 U.S. 207, 227 n.19 (1985) (noting that the Patent Act provides "treble damages *for willful infringement*" (emphasis added)). The regional circuits (before the creation of the Federal Circuit) repeatedly held that willful infringement was a prerequisite to increased (*i.e.*, punitive) damages. *See, e.g., Lam, Inc. v. Johns-Manville Corp.*, 668 F.2d 462, 474 (10th Cir. 1982) ("Courts have limited the increases [under section

284] to instances in which the infringement was willful."); *Wilden Pump & Eng'g Co. v. Pressed & Welded Prods. Co.*, 655 F.2d 984, 989 (9th Cir. 1981) (reversing a punitive damages award where the record did not support the district court's willfulness finding); *Eltra Corp. v. Basic, Inc.*, 599 F.2d 745, 757 (6th Cir. 1979) ("In order to support . . . an increased, punitive award there must be a finding that the infringement was willful."); *Yoder Bros, Inc. v. Cal. Fla. Plant Corp.*, 537 F.2d 1347, 1383 (5th Cir. 1976) (reversing award of treble damages where the record indicated that the infringement was not willful); *Union Carbide Corp. v. Graver Tank & Mfg. Co.*, 282 F.2d 653, 675 (7th Cir. 1960) ("[I]t is only on the basis of conscious and willful infringement that exemplary or punitive damages are allowed[.]").[2] The Federal Circuit likewise has long limited punitive damages to cases of willful patent infringement. *E.g.*, *Read Corp. v. Portec Inc.*, 970 F.2d 816, 826 (1992); *Beatrice Foods Co. v. New*

---

[2] In *In re Seagate*, Judge Gajarsa acknowledged "the majority rule . that an award of enhanced damages pursuant to section 284 requires a finding of willfulness," but he asserted that some courts had taken a different view. 497 F.3d at 1384 (Gajarsa, J., concurring in the judgment). Neither of the two regional circuit decisions he cited, however, supports his assertion. *See Saturn Mfg., Inc. v. Williams Patent Crusher & Pulverizer Co.*, 713 F.2d 1347, 1358 (8th Cir. 1983) (rejecting the district court's imposition of an "exceptional case" requirement *in addition to* a finding of "willful or wanton infringement"); *Trio Process Corp. v. L. Goldstein's Sons, Inc.*, 638 F.2d 661, 663 (3d Cir. 1981) (concluding that the district court's damage increase was punitive and thus should be excluded from statutory interest calculation); *see also* Stryker Br. 30, 44 (relying on *Trio Process Corp.*).

England Printing & Lithographing Co., 923 F.2d 1576, 1578-80 (1991).

The rule "that an award of enhanced damages requires a showing of willful infringement," *In re Seagate*, 497 F.3d at 1368, is thus firmly rooted in precedent to the point of being black-letter law. *See* 7 Chisum on Patents § 20.03[4][b][iii] (2015) ("The power to increase [infringement damages] is trigged only when the infringer's conduct warrants an exemplary award."). Section 284 is properly interpreted to have incorporated this settled rule, not to have silently rejected it—indeed, so silently that courts from 1952 on consistently overlooked it.

2. Congressional action since 1952 has eliminated any doubt about whether section 284 contemplates a willfulness requirement. In 2011, Congress adopted a new provision as part of the America Invents Act that presupposes (and thus confirms) the existence of a willfulness requirement. *See* 35 U.S.C. § 298. Section 298 provides that patentees may not use evidentiary silence about whether an infringer obtained advice from counsel "to prove that the accused infringer *willfully* infringed the patent." 35 U.S.C. § 298 (emphasis added). Willfulness appears nowhere else in the patent law. Thus, this amendment, which governs the type of proof that can be used to establish willfulness, only "make[s] sense" if willfulness is required to establish punitive damages under section 284 in the first place, and its adoption "signals that Congress ratified" the traditional understanding of the statute. *Tex. Dep't of Hous. & Cmty. Affairs v. Inclusive Communities Project*, 135 S. Ct. 2507, 2520-

21 (2015) (statutory amendments that presupposed the courts of appeals' uniform interpretation of the Fair Housing Act demonstrated Congress's ratification of the settled interpretation).

B. Section 284 Creates A Species Of Punitive Damages, And The Willfulness Requirement Is Consistent With The Ordinary Rule For Punitive Damages

Requiring willful infringement as a predicate for enhanced damages is consistent with the purpose underlying section 284's increased damages clause: empowering courts *to punish* patent infringers whose conduct is particularly blameworthy and should be discouraged. Contrary to petitioners' revisionism, it has long been understood that awards of enhanced damages for patent infringement are punitive in nature. *See Aro Mfg.*, 377 U.S. at 508; *Root v. Lake Shore & M.S. Ry. Co.*, 105 U.S. (15 Otto) 189, 195-96 (1881); *Seymour*, 57 U.S. at 488-89; *Beatrice Foods Co.*, 923 F.2d at 1580; *cf.* D. Owen, *Punitive Damages in Products Liability Litigation*, 74 Mich. L. Rev. 1257, 1262 n.17 (1976) (explaining that multiple damages, like the treble damages provision here, "are plainly a form of punitive damages"). Notwithstanding ongoing scholarly debate, "the consensus" view in the law "is that punitive[]" damages "are aimed not at compensation but principally at retribution and deterring harmful conduct." *Exxon Shipping Co. v. Baker*, 554 U.S. 471, 492 (2008).[3]

---

[3] Stryker Corp. contends, somewhat half-heartedly, that courts may use section 284's enhanced damages clause to ensure

To achieve their purpose and serve as legitimate punishments, punitive or exemplary damages are reserved for cases where the defendant's conduct was truly "reprehensibl[e]." *State Farm. Mut. Auto. Ins. Co. v. Campbell*, 538 U.S. 408, 418 (2003). "As the Court stated" many years ago, "exemplary damages imposed on a defendant should reflect 'the enormity of his offense.'" *BMW of N. Am., Inc. v. Gore*, 517 U.S. 559, 575 (1996) (quoting *Day v. Woodworth*, 54 U.S. (13 How.) 363, 371 (1851)).

The Court recognized this precise point in *Seymour*, in which the Court first addressed section 284's precursor in the 1836 Act. The Court noted that Congress had adopted the new discretionary, increased damages provision to enable courts to distinguish "defendant[s] who acted in ignorance or good faith" from "the wanton and malicious pirate." 57 U.S. at 488. Only the latter, the Court explained, should be subject to "exemplary damages," because there was "no good reason" why merely "taking a

---

adequate compensation when actual damages are difficult to prove. *See* Stryker Br. 30, 42-43; *see also* Halo Electronics Br. 17. But courts already account for issues of proof in other ways: "when the amount of the damages cannot be ascertained with precision, any doubts regarding the amount must be resolved against the infringer." *Lam, Inc. v. Johns-Manville Corp.*, 718 F.2d 1056, 1065 (Fed Cir. 1983) (citing *Story Parchment Co. v. Paterson Parchment Paper Co.*, 282 U.S. 555, 563 (1931)). Moreover, as Stryker acknowledges, patentees may "seek injunctions, ongoing royalties, and attorney's fees as potential compensation," which Stryker concedes makes "punish[ing] and deter[ing]" culpable conduct," at the very least, "the most common purpose" for enhancing damages under section 284. Stryker Br. 35.

man's property in an invention should be trebly punished." *Id.* at 488-89.

Exposing defendants to enhanced damages in mine-run infringement cases would divorce the law from its punitive purpose, particularly because ordinary patent infringement is a "strict-liability offense." *Commil USA*, 135 S. Ct. at 1926. It is unlikely that Congress intended to make even accidental patent infringers subject to potentially ruinous treble damages. Rather, Congress would have understood that a willfulness requirement was implicit in section 284's authorization to increase damages, because not only is that how courts interpreted the predecessor statute, pp. 8-9, *supra*, but also how punitive damages *typically* operate, *see Exxon Shipping Co.*, 554 U.S. at 493; *Day*, 54 U.S. at 371.

C. Discarding The Willfulness Requirement Would Discourage Innovation

The existing willfulness requirement preserves the breathing space needed for legitimate competition to flourish while still allowing patentees to recover for their actual injuries even in cases of innocent infringement. By contrast, petitioners' approach to enhanced damages under section 284 would over-deter innovation and competition, insulate questionable patents from challenges in federal court, and encourage patent abuse by making treble damages available in every infringement case.

1. "One of the benefits of a patent system" is the incentive it provides "to design around a competitor's products, even when they are patented, thus

bringing a steady flow of innovations to the marketplace." R. Harmon, *Harmon on Patents* § 11.1, at 270 (2007). The line between designing around and infringing a patent, however, is often a fine one, and companies may guess wrong about whether their alternative methods or designs infringe. *See, e.g.*, *Warner-Jenkinson Co. v. Hilton Davis Chem. Co.*, 520 U.S. 17, 24-30 (1997) (discussing infringement by equivalents). If punitive damages were available every time defendants find themselves on the wrong side of the line, companies may stop testing the boundaries of patent claims, which would lead to effective monopolies that extend beyond the legitimate scope of patent rights.

In addition, because patents are sometimes granted when they should not have been and because patentees have obvious incentives to stretch the exclusionary scope of their patents, "[g]ood faith challenges to the validity or scope of patent rights" are generally socially beneficial and "should be encouraged rather than punished." 7 Chisum on Patents § 20.03[4][b]][iii]. Indeed, Congress itself recognizes that patent challenges can be pro-competitive and has created incentives in certain industries for parties to take actions that are likely to trigger patent infringement suits. *See FTC v. Actavis, Inc.*, 133 S. Ct. 2223, 2228-29 (2013) (discussing a statutory provision that awards exclusivity to generic drug manufacturers that challenge the validity or scope of a brand's patent and open themselves to litigation). Putting increased damages on the table in *every* case would deter meritorious patent challenges—a point that Congress has recognized by, for example, allowing

parties to challenge pharmaceutical patents without risking *any* damages, much less enhanced damages. *See id.* at 2233; 35 U.S.C. § 271(e)(4). Companies that are willing to run the risk of paying compensatory damages to test their good-faith belief about the invalidity or scope of a patent may well balk at risking up to *three times* that amount. As a result, more weak patents would remain unchallenged, blocking competition and harming consumers.

2. Removing the requirements for increased damages under section 284 could also exacerbate the problem of abusive patent litigation. *See* A. Davis & K. Jesien, *The Balance of Power in Patent Law: Moving Towards Effectiveness in Addressing Patent Troll Concerns*, 22 Fordham Intell. Prop. Media & Ent. L. J. 835, 843 (2012) (explaining that the willfulness requirement "curtails the leverage" non-practicing entities employ to force settlements).

As "[t]he Court is well aware," "an industry has developed in which firms use patents not as a basis for producing and selling goods but, instead, primarily for obtaining licensing fees." *Commil USA*, 135 S. Ct. at 1930 (quotation marks omitted). These companies "use patents as a sword" to extort payments, irrespective of patent quality. *Ibid.* Such companies often operate by sending boilerplate "demand letters," which "'may be sent very broadly and without prior investigation,'" to numerous potential defendants in order "to obtain payments that are based more on the costs of defending litigation than on the merit of the patent claims." *Ibid.* (quotation marks omitted).

Financial services companies have been particularly attractive targets for these abusive patent litigation practices. One study found that patents directed to financial services related technology are *27-39 times* more likely to be asserted in litigation than patents generally. J. Lerner, *The Litigation of Financial Innovations*, 53 J. L. & Econ. 807, 808 (2010). Moreover, third-party patent owners (*i.e.*, parties other than the inventor or original assignee) brought an unusually high number of these suits, *id.* at 815-16, suggesting that most of the infringement litigation is driven by bulk patent buyers who are opportunistically seeking out lawsuits rather than by genuine innovators who are actually engaging in competition.

One notorious example of patent litigation abuse involves actions filed by Maxim Integrated Products, Inc. against dozens of financial services companies (among others). Maxim acquired patents that were originally issued in connection with the development of a product called the "iButton"—a small steel fob containing basic internal circuitry designed to store and transfer data, such as digital money for a bus or subway fare. In 2012, ten years after those patents issued, Maxim began to assert them against mobile banking applications on smartphones, sending generic notice letters to numerous financial services institutions and subsequently filing suit for alleged patent infringement. *See, e.g.*, Compl. ¶¶ 23-24, *Maxim Integrated Prods., Inc. v. Bank of Am. Corp.*, No. 12-cv-617-RAS (E.D. Tex. Oct. 1, 2012), ECF No. 1 ("Maxim Compl."). Notwithstanding the weaknesses of Maxim's patent claims, the overwhelming majority of accused financial services

institutions settled. *See In re Maxim Integrated Prods., Inc.*, MDL No. 2354, 2015 WL 867651, at *1 & n.1 (W.D. Pa. Feb. 27, 2015). No doubt encouraged by its success in forcing settlements, Maxim recently filed a new round of suits against additional financial services companies based on the same theory.[4] Once again, the cases quickly ended in settlements.[5]

Adopting petitioners' interpretation of section 284 could aggravate the problem of abusive patent litigation—a problem that already "impose[s] a harmful tax on innovation," *Commil USA*, 135 S. Ct. at 1930 (quotation marks omitted). Accused infringers would become even less likely to challenge weak infringement claims if defending risks significant exposure to treble damages for ordinary patent infringement, subject only to the discretion of a single district judge making an "all-things-considered" evaluation.

The elimination of willfulness as a threshold requirement in favor of an all-things-considered standard would be particularly problematic because defendants would lose the ability to take treble

---

[4] *See* Complaint for Patent Infringement, *Maxim Integrated Prods., Inc. v M&T Bank Corp.*, No. 15-cv-02167-DLC (S.D.N.Y. Mar. 23, 2015), ECF No. 1; Complaint for Patent Infringement, *Maxim Integrated Prods., Inc. v. HSBC Bank USA, N.A.*, No. 15-cv-02168-DLC (S.D.N.Y. Mar. 23, 2015), ECF No. 1; Complaint for Patent Infringement, *Maxim Integrated Prods., Inc. v. Santander Bank, N.A.*, No. 15-cv-02169-DLC (S.D.N.Y. Mar. 23, 2015), ECF No. 1.

[5] *See* Order of Discontinuance, *Maxim Integrated Prods., Inc. v. M&T Bank Corp.*, No. 15-cv-02167-DLC (S.D.N.Y. Oct. 30, 2015), ECF No. 57 (noting that all three actions had reached settlement).

damages off the table early in litigation through pre-trial motions. Under current law, defendants regularly move early in the case for a ruling that their conduct was not willful in order to limit their exposure and reduce settlement pressure. *See* 7 Chisum on Patents § 20.03[4][b][v][L][9] (collecting decisions granting summary judgment to defendants on willfulness claims); C. Seaman, *Willful Infringement and Enhanced Damages After* In re Seagate: *An Empirical Study*, 97 Iowa L. Rev. 417, 441 (2012) (reporting that, post-*Seagate*, courts ruled on willfulness in pretrial motions in more than one-quarter of all cases).

If companies have no reliable way to insulate themselves from punitive damages—despite the strength of their defenses and the absence of any evidence of bad faith—many will settle rather than face even a small risk of financially crippling awards. Patentees, recognizing the leverage they enjoy, will have reason to bring more dubious infringement cases in the first place.

II. The Court's Test Should Protect Parties That Acted In Good Faith Based On A Reasonable Belief That They Were Not Infringing A Valid Patent

Petitioners object to what they claim is the Federal Circuit's "rigid" two-part test that makes the objective unreasonableness of the accused infringer's defenses a prerequisite to demonstrating willfulness and thus for an award of increased damages. *See* Halo Electronics Br. 18, 21-25; Stryker Br. 19, 45-51. Even if the Court agrees that the Federal

Circuit's *Seagate* test should be modified, the Court should make clear that objective reasonableness is an important factor for identifying willful infringement. Courts should not impose punitive sanctions on a defendant that advances reasonable non-infringement or invalidity defenses absent particularized evidence of the defendant's lack of a good faith belief in the legality of its actions at the time of the infringing conduct. Such evidence could include, for example, evidence of deliberate copying of an invention after it was patented, concealment of misconduct, or motivation to harm. The Court should also make clear that the Federal Circuit retains a meaningful role in reviewing punitive damage awards to ensure that individual district judges in a handful of judicial districts do not drive national patent policy.

A. Objective Reasonableness Should Play An Important Role In Any Test For Increasing Infringement Damages

Petitioners' criticisms of the Federal Circuit's objective reasonableness requirement are substantially overstated. Courts have long held that patent infringement is not willful if the accused infringer relies on an objectively reasonable defense—an approach that mirrors how courts (including this Court) have applied "willfulness" in other areas of law. At most, petitioners' arguments suggest that patentees should be able to prove that infringement was willful when a defense first advanced in litigation, though plausible, was not honestly believed at the time of the infringing conduct and the defendant acted in bad faith.

1. As with the general willfulness requirement, the Federal Circuit's focus on objective reasonableness has a long lineage, even though the *In re Seagate* test is more recent. Courts have recognized for decades—both before and after the 1952 Act—that "[w]illfulness" cannot be established and punitive damages cannot be imposed "where the validity of the patent" or "any possible infringement is open to honest doubt." *Wilden Pump & Eng'g*, 655 F.2d at 989 (quotation marks omitted); *see Artmoore Co. v. Dayless Mfg. Co.*, 208 F.2d 1, 5 (7th Cir. 1953) ("It has been held that a bona fide and reasonable belief that a patent was invalid removes the infringement from the class designated as wanton and willful."); *Enterprise Mfg. Co. v. Shakespeare Co.*, 141 F.2d 916, 921 (6th Cir. 1944) (infringers "should not be made to smart in punitive damages" if they were "honestly mistaken as to a reasonably debatable question of validity"); *Rockwood*, 37 F.2d at 66 (reversing award of punitive damages because "[t]he validity of the patent and its infringement was open to honest doubt").

This established framework is consistent with other areas of law in which willfulness is a prerequisite to enhanced damages. This Court has generally equated "willfulness" with civil "recklessness"—a standard that is satisfied if a party acts in the face of "an unjustifiably high risk of harm that is either known or so obvious that it should be known." *Safeco*, 551 U.S. at 68-69 (quotation marks omitted); *see also McLaughlin v. Richland Shoe Co.*, 486 U.S. 128, 133 (1988) ("willful" violations involve conduct that "is not merely negligent," where the defendant at least "showed reckless disregard" for

whether its conduct was unlawful); *Trans World Airlines, Inc. v. Thurston*, 469 U.S. 111, 125-29 (1985) (similar interpretation of "willful").

Applying a recklessness standard, this Court has rejected willfulness claims when a party's liability defense is objectively reasonable. In *Safeco*, for example, the Court addressed the scope of the Fair Credit Reporting Act, which subjects parties to liability (and potential punitive damages) if they "willfully fail[]" to provide consumers with notice of any adverse action based on information in a consumer credit report. 15 U.S.C. § 1681(a). After concluding that "willful[]" meant at least "reckless," the Court held that the defendant could not be held liable for willful infringement because its reading of the statute, though "erroneous," was "not objectively unreasonable." *Safeco*, 551 U.S. at 57-58, 69. Similarly, in *Trans World Airlines*, the Court held that an employer's violation of the Age Discrimination in Employment Act was not "willful" within the meaning of 29 U.S.C. § 626(b), because the employer had attempted to bring its policies into compliance based on a reasonable understanding of the law. 469 U.S. at 129-30. As a result, the Court held that the lower court's award of "double damages" was improper. *Id.* at 130.

Courts have also looked to objective reasonableness when deciding whether to award enhanced damages for willful infringement of copyrights—a context that is "closely related" to patent infringement. *Fogerty v. Fantasy, Inc.*, 510 U.S. 517, 525 n.12 (1994). Under copyright law, courts may punitively increase statutory damages in

cases of "willful[]" acts of infringement. *See* 17 U.S.C. § 504(c)(2); *see also On Davis v. Gap, Inc.*, 246 F.3d 152, 172 (2d Cir. 2001) (noting that this provision serves "[t]he purpose of punitive damages"). The courts of appeals have "unanimously and routinely" recognized that this standard is satisfied only when the defendant's infringement is knowing or reckless. *Sony BMG Music Entm't v. Tenebaum*, 660 F.3d 487, 507-08 (1st Cir. 2011). Indeed, the Act allows the court to reduce damages in cases with innocent (*i.e.*, non-negligent) defendants and requires courts to "remit" statutory damages "in any case where an infringer believed and had reasonable grounds for believing" that its infringement was fair use. 17 U.S.C. § 504(c)(2).

There is no good reason for diluting the willfulness standard in patent cases or for reducing the role played by objective reasonableness in this context. Petitioners claim that these cases are distinguishable, because, unlike the statutes at issue in the cases discussed, section 284 does not include an express willfulness requirement. *See* Halo Electronics Br. 23; Stryker Br. 45-46. For the reasons explained above, however, section 284 should be interpreted to incorporate a willfulness requirement. *See* Part I, *supra*. Decisions setting the contours for willfulness in other contexts are thus highly relevant and should inform the Court's decision here. Petitioners also insist that their approach is consistent with decisions like *Safeco*. Stryker even observes (correctly) that "the term 'willful' in patent infringement cases signifie[s] a level of heightened culpability greater than negligence on the part of the infringing defendant."

Stryker Br. 46. Elsewhere, however, Stryker argues for the imposition of enhanced damages based on, *inter alia*, whether the defendant "reasonably investigated" the patent after it "knew *or should have known*" about the prospect for infringement, *see id.* at 38 (emphasis added)—a quintessential negligence standard. *See Global-Tech Appliances, Inc. v. SEB S.A.*, 131 S. Ct. 2060, 2071 (2011) ("[A] negligent defendant is one who should have known of a similar risk but, in fact, did not."). The Court should not allow negligence concepts to substitute for willfulness.

2. Petitioners argue at length that the Federal Circuit's test under *In re Seagate* is unfair because it allows defendants to avoid enhanced damages by inventing plausible defenses in litigation. *See* Halo Electronics Br. 24-25, 28; Stryker Br. 47-51. Reducing the importance of objective reasonableness, however, would create its own set of problems, including encouraging the abusive demand letters discussed above, pp. 16-17, *supra*.

Patentees already argue that boilerplate demand letters place defendants "on notice" that they are infringing (or inducing the infringement of) a patent, which they claim entitles them to treble damages for willful infringement. *See, e.g.*, Maxim Compl. ¶¶ 24, 27, 32, 35, 40, 43, 48, 51, Prayer for Relief (d); *see also* D. Prati, In re Seagate Technology LLC: *A Clean Slate for Willfulness*, 23 Berkeley Tech. L.J. 47, 54 (2008) (explaining that demand letters are "motivated by a desire to trigger" a duty of investigation, "which could lead to enhanced damages"). Reducing the importance of objective

reasonableness as a defense and replacing it with a purely subjective inquiry might force companies to incur the considerable expense of investigating every vague notice letter, lest a plaintiff later accuse the defendant of fabricating its defense *post hoc*. *See* D. Prati, *supra*, at 54-55 (noting that some companies receive "hundreds" of demand letters a year, and that each investigation incurs significant legal fees).

Moreover, even assuming that petitioners are right that the *In re Seagate* test goes too far, the Court should not subject parties to punitive damages when their belief concerning invalidity or non-infringement not only is objectively reasonable, but also was "bona fide," *i.e.*, actually held. *Artmoore Co.*, 208 F.2d at 5; *see also Enterprise Mfg. Co.*, 141 F.2d at 921 (punitive damages are unavailable if the defendant is "*honestly mistaken* as to a reasonably debatable question of validity" (emphasis added)); *cf. Bridgeport Music, Inc. v. UMG Recordings, Inc.*, 585 F.3d 267, 279 (6th Cir. 2009) (in a copyright case, recognizing that a reasonable belief of fair use negates a claim of willful infringement if the defense "is formed prior to the infringing acts"). In cases with a defense that is both reasonable and genuine, there is no basis to conclude that the defendant engaged in *willful* infringement that merits punishment through increased damages. *See Safeco*, 551 U.S. at 70 & n.20 ("[I]t would defy history and current thinking to treat a defendant who merely adopts" one "reasonable interpretation" out of many as "a knowing or reckless violator").

Courts have long recognized they should "not readily infer wrong motivation upon the part of those

resisting the validity of patent claims" with defenses that are objectively reasonable. *Enterprise Mfg. Co.*, 141 F.2d at 921. Any approach that discounts whether the defendant's litigation position was objectively reasonable risks diluting the meaning of willfulness by punishing conduct that is at worst negligent, such as if the defendant did not immediately investigate a patent after receiving an initial (likely vague) demand letter from the patentee. Minimizing the objective part of the inquiry would also make punitive damages less predictable—inevitably increasing abusive patentees' leverage to extort settlements.

3. Given these considerations, if the Court concludes that objective unreasonableness is not a prerequisite to increased damages under section 284, the Court should still instruct lower courts that objective reasonableness is an important consideration that makes increased damages inappropriate in most cases. Courts should only increase damages in the face of an objectively reasonable defense if the patentee presents particularized evidence showing that the defense was not honestly held at the time of infringement and that the defendant acted in bad faith with the intent to steal the patentee's intellectual property.

Courts can evaluate the defendant's bad faith under this standard by applying several of the factors the Federal Circuit already uses to guide district court discretion to make damage awards. *See Read*, 970 F.2d at 827. Specifically, courts may look to: (1) whether the defendant "deliberately copied" an invention after it was patented without

meaningful efforts to design-around the patent; (2) whether the defendant "attempted to conceal" its infringing conduct; and (3) whether the defendant had a "motivation [to] harm" the patentee, as in cases involving commercial rivals.[6] *Ibid.*; *see also Knorr-Bremse Systeme Fuer Nutzfahrzeuge GmbH v. Dana Corp.*, 383 F.3d 1337, 1348-49 (Fed. Cir. 2004) (Dyk, J., concurring in part and dissenting in part) (identifying similar considerations as relevant to willfulness). Defendants, in turn, could establish that punitive damages are not warranted by presenting evidence that they investigated the validity and scope of the patent. *See Read*, 970 F.3d at 827. The absence of evidence relating to advice from counsel, however, "may not be used" against the defendants to establish willfulness, 35 U.S.C. § 298.[7]

---

[6] Stryker does not specifically identify this third factor, but it correctly observes that enhancement is "less appropriate when requested by a patentee that relies on the threat of treble damages in order to exact exorbitant licensing fees from practicing entities." Stryker Br. 43 (citing *eBay Inc. v. MercExchange, LLC*, 547 U.S. 388, 396 (2006) (Kennedy, J., concurring)). Stryker's approach on this point is well supported by historical practice *See* 3 W. Robinson, *Law of Patents* § 1069, at 365-66 (1890) (indicating that increased damages are unavailable if "the plaintiff is a mere assignee for speculative purposes and not a *bona fide* user of the invention").

[7] Other factors identified by the Federal Circuit in *Read* may also inform the district court's decision whether to increase damages (and by how much), but they are less relevant to the threshold willfulness question. *See* 970 F.2d at 827 (the defendant's "behavior as a party to the litigation," the defendant's "size and financial condition," whether the defendant ceased its conduct during the litigation or took remedial action). Another factor—the "[c]loseness of the case," *ibid.*—overlaps with objective reasonableness.

Petitioners appear to endorse the use of the Federal Circuit's *Read* factors, *see* Halo Electronics Br. 16-18, 25, 27; Stryker Br. 37-42, but their approach is different than the one suggested here. *First*, and most fundamentally, petitioners suggest those factors (or similar factors) should serve as a *substitute* for willfulness. *See* Halo Electronics Br. 27; Stryker Br. 36, 44-45. As a result, they allow for the possibility that a defendant could be subjected to enhanced damages even if the defendant is only "mildly culpable," Halo Electronics Br. 28, or even if the defendant's conduct was "not aggravated in any sense," Stryker Br. 42. By contrast, the position advocated here—and the position that is consistent with the history underlying section 284—requires a threshold showing of willfulness and suggests factors that may inform the decision whether infringement was willful.

Second, although petitioners at times concede that defendants "typically should not be subject to damages enhancements when they adopted reasonable positions on the basis of available facts," Stryker Br. 42, their indeterminate approach allows defendants to face punitive damages for judgments that are reasonable or at worst negligent. *See* pp. 23-24, *supra*. The approach suggested here retains objective reasonableness as a significant consideration that ordinarily negates an inference of willfulness, but it would allow patentees to present evidence that the defense is *post hoc* and that the infringement was in fact "wanton or malicious," *Seymour*, 57 U.S. at 489.

B. Enhanced Damages Awards For Patent Infringement Should Be Susceptible Of Meaningful Appellate Review

If the Court modifies the *In re Seagate* test, it should ensure that any alternative framework allows for meaningful appellate review of a district court's decision to punitively increase damages.

1. "[A]ppellate review" provides an important check on the fact finder's discretion to punish by ensuring that damage awards "are reasonable in their amount and rational in light of their purpose to punish what has occurred and to deter its repetition." *Pac. Mut. Life Ins. Co. v. Haslip*, 499 U.S. 1, 21 (1991); *cf. Cooper Indus., Inc. v. Leatherman Tool Grp., Inc.*, 532 U.S. 424, 436 (2001) (holding that due process challenges to punitive damage awards are reviewed *de novo*). Appellate review is particularly important in patent infringement cases, because it promotes "uniformity in treatment of a given patent," *Markman v. Westview Instruments, Inc.*, 517 U.S. 370, 390 (1996), by enabling the Federal Circuit to make awards more consistent and predictable across similar cases.

Historically, determinations about whether a company has willfully infringed a patent have varied considerably among judicial districts. C. Seaman, *supra*, at 449-51 (reporting for cases decided between 2004 and 2010 that the percentage of willfulness findings ranged from 52.3% (the Eastern District of Texas) to 27.3% (the District of Minnesota)). "Patentees frequently engage in forum shopping," with certain patentees, "often fil[ing] suit in the Eastern District of Texas." *Ibid.* An open-ended

approach to enhanced damages that minimizes the Federal Circuit's role risks allowing a handful of judicial districts to drive national patent law. Such a non-rule would also give patentees more leverage to extort settlements by filing (or threatening to file) suit in high-damage jurisdictions.

Notably, these considerations did not arise to nearly the same degree in *Octane Fitness, LLC v. Icon Health & Fitness, Inc.*, 134 S. Ct. 1749 (2014), and *Highmark Inc. v. Allcare Health Management Systems, Inc.*, 134 S. Ct. 1744 (2014), in which the Court respectively addressed the standards for attorney's fee awards under 35 U.S.C. § 285 and appellate review of those awards. Although attorney's fee awards can be substantial, they do not have the potential to expose parties to hundreds of millions of dollars in the form of punitive damages in high-value patent cases. They also may be assessed based on "the unreasonable manner in which the case was litigated," *Octane*, 134 S. Ct. at 1756—matters that district courts are particularly well suited to address, and that have few, if any, national implications for patent rights. Finally, district-by-district variations are much less likely to lead to forum shopping, because attorney's fees can be shifted to either party, whereas only the defendant faces increased risk under section 284.

2. Meaningful appellate review is possible even assuming an abuse of discretion standard is applied to the district court's ultimate decision whether to punitively increase infringement damages. *See Spectralytics, Inc. v. Cordis Corp.*, 649 F.3d 1336, 1347 (Fed. Cir. 2011) (applying this standard).

Because "[a] district court would necessarily abuse its discretion if it based its ruling on an erroneous view of the law," *Highmark*, 134 S. Ct. at 1748 n.2, appellate courts should be able to reverse any decisions to increase damages that were not premised on willful infringement, *see* Part I, *supra*. Under the approach advocated by Askeladden, appellate courts would also properly reverse in cases where the lower court's willfulness determination was based on legal mistakes about whether certain defenses were objectively unreasonable or clear factual errors concerning the defendant's actual beliefs and intentions at the time of infringement.[8]

The key question here is not so much the standard of review, but rather whether district courts are required to "explain the basis" for enhanced awards, *Read*, 970 F.2d at 828, according

---

[8] The Federal Circuit has held that willfulness is determined by the jury rather than the court if a jury trial is requested. *See Nat'l Presto Indus., Inc. v. West Bend Co.*, 76 F.3d 1185, 1193 (Fed. Cir. 1996). That conclusion is questionable and should be reviewed in an appropriate case. *See* Pet. App. in No. 14-1514, at 30-31 (O'Malley, J., concurring). The text of section 284 vests power to enhance damages in "the court," not in the jury. 35 U.S.C. § 284; *see also Feltner v. Columbia Pictures Tel., Inc.*, 523 U.S. 340, 345-47 (1998) (interpreting similarly worded Copyright Act provision). There does not appear to be any common law precedent of juries awarding enhanced damages for patent infringement, and functional considerations favor allocating the issue to the court. *See generally* J. Pegram, *The Willful Patent Infringement Dilemma and the 7th Amendment*, 86 J. Pat. & Trademark Off. Soc'y 271, 283 (2004); *see also Birdsall v. Coolidge*, 93 U.S. (3 Otto) 64, 64 (1876) (explaining that "jur[ies] are strictly limited in their finding to the actual damages which the plaintiff has sustained by the infringement" while the power to increase damages is "given to the court").

to relatively fixed criteria. Petitioners' open-ended, all-things-considered proposal provides no clear guidance and would leave punitive damage awards for patent infringement practically unreviewable. The Court should reject it.

CONCLUSION

The Court should reaffirm that willfulness is a prerequisite to increased damages under section 284, and it should hold that the objective reasonableness of a defendant's legal position is, at a minimum, an important consideration in deciding whether to punitively increase infringement damages.

Respectfully submitted.

KEVIN J. CULLIGAN
Counsel of Record
GOODWIN PROCTER LLP
New York Times Building
620 Eighth Avenue
New York, NY 10018
kculligan@goodwinprocter.com
(212) 813-8800

WILLIAM M. JAY
BRIAN T. BURGESS
GOODWIN PROCTER LLP
901 New York Ave., N.W
Washington, DC 20001

December 16, 2015

JAN 20 2016
OFFICE OF THE CLERK

Nos. 14-1513 and 14-1520

In the Supreme Court of the United States

HALO ELECTRONICS, INC.,

Petitioner,

v.

PULSE ELECTRONICS, INC., ET AL.,

Respondents.

STRYKER CORPORATION, ET AL.,

Petitioners,

v.

ZIMMER, INC., ET AL.,

Respondents.

On Writs of Certiorari
To The United States Court Of Appeals
For The Federal Circuit

BRIEF OF BSA | THE SOFTWARE ALLIANCE AS *AMICUS CURIAE* IN SUPPORT OF RESPONDENTS

ANDREW J. PINCUS
Counsel of Record
PAUL W. HUGHES
Mayer Brown LLP
1999 K Street, NW
Washington, DC 20006
(202) 263-3000
apincus@mayerbrown.com

Counsel for Amicus Curiae

TABLE OF CONTENTS

Page

Table of Authorities iii

Interest of the *Amicus Curiae* 1

Introduction and Summary of Argument 2

Argument 4

Enhanced Damages Are Available Only For Extraordinarily Wrongful Infringement. 4

A. The Nebulous Standards Advocated By Petitioners And Their *Amici* Would Significantly Impede Innovation 4

1. The standards proposed by petitioners and their amici will permit few pretrial dismissals and have the same practical effect as the pre-*Seagate* test. 4

2. The proposed enhanced damages standards will deter innovation and impose very substantial unjustified costs. 10

B. Section 284's Enhanced Damages Standard Requires A Patentee To Establish Highly Culpable Infringement. 17

1. The pre-1952 decisions codified in Section 284 require proof of an extremely high degree of culpability. 20

2. Enhanced damages are available only if the plaintiff proves that the defendant actually knew it was engaging in infringement 22

TABLE OF CONTENTS—continued

Page

3. Proof that the defendant's actions were objectively reasonable bars enhancement. 26

4. Enhanced damages are limited to highly culpable infringement and may not be awarded for litigation misconduct. 30

5. An expansive enhanced damages standard cannot be justified on compensation grounds....31

C. Close Judicial Supervision Of Enhanced Patent Damages Is Essential To Prevent Abuse....33

1. The judge, not jury, determines willfulness....33

2. A district court's decision to award enhanced damages should be reviewed *de novo*. 35

Conclusion 37

TABLE OF AUTHORITIES

Page(s)

Cases

Advanced Data Access LLC v. *Nanya Tech. Corp.*, 2012 WL 10873894 (E.D. Tex. 2012) 8

Aro Mfg. Co. v. *Convertible Top Replacement Co.*, 377 U.S. 476 (1964) 28, 31, 32

Bard Peripheral Vascular, Inc. v. *W.L. Gore & Assoc.*, 670 F.3d 1171 36

Bell v. *McCullough*, 3 F. Cas. 108 (C.C.S.D. Ohio 1858) 21

Birdsall v. *Coolidge*, 93 U.S. 64 (1876) 32

Blue Chip Stamps v. *Manor Drug Stores*, 421 U.S. 723 (1975) 11

Bonito Boats, Inc. v. *Thunder Craft Boats, Inc.*, 489 U.S. 141 (1989) 2

Brown Bag Filling Mach. Co. v. *Drohen*, 175 F. 576 (2d Cir. 1910) 27

Burdell v. *Denig*, 4 F. Cas. 695 (C.C.S.D. Ohio 1865) 20

Clark v. *Schieble Toy & Novelty Co.*, 248 F. 276 (6th Cir. 1917) 21

Commil USA, LLC v. *Cisco Sys., Inc.*, 135 S. Ct. 1920 (2015) 11, 23

Consol. Rubber Tire Co. v. *Diamond Rubber Co. of New York*, 226 F. 455 (S.D.N.Y. 1915) 27

TABLE OF AUTHORITIES—continued

Page(s)

Cooper Indus., Inc. v. *Leatherman Tool Grp., Inc.*,
532 U.S. 424 (2001) 37

Corning v. *Burden*,
56 U.S. 252 (1854) 20

Coupe v. *Royer*,
155 U.S. 565 (1895) 31

Creagmile v. *John Bean Mfg. Co.*,
32 F. Supp. 646 (S.D. Cal. 1940) 21

Day v. *Woodworth*,
54 U.S. 363 (1851) 33

eBay, Inc. v. *MercExchange, L.L.C.*,
547 U.S. 388 (2006) 11, 32

Expanded Metal Co. v. *Gen. Fireproofing Co.*,
247 F. 899 (N.D. Ohio 1917) 21

Feist Publ'ns, Inc. v. *Rural Tel. Serv. Co.*,
499 U.S. 340 (1991) 24

Finjan, Inc. v. *Sophos, Inc.*,
2015 WL 7075573 (N.D. Cal. 2015) 9

Florida Prepaid Postsecondary Educ. Expense Bd. v. *Coll. Sav. Bank*,
527 U.S. 627 (1999) 31

General Motors Corp. v. *Devex Corp.*,
461 U.S. 648 (1983) 21, 22, 32

Global-Tech Appliances, Inc. v. *SEB S.A.*,
131 S. Ct. 2060 (2011) 23

Harlow v. *Fitzgerald*,
457 U.S. 800 (1982) 30

TABLE OF AUTHORITIES—continued

Page(s)

Highmark Inc. v. *Allcare Health Mgmt. Sys., Inc.*, 134 S. Ct. 1744 (2014) 35

Investpic, LLC v. *FactSet Research Sys., Inc.*, 2011 WL 4591078 (D. Del. 2011) 9

J.E.M. Ag Supply, Inc. v. *Pioneer Hi-Bred Int'l, Inc.*, 534 U.S. 124 (2001) 14

Lilly v. *Virginia*, 527 U.S. 116 (1999) 36

Livingston v. *Woodworth*, 56 U.S. 546 (1853) 20, 26

Markman v. *Westview Instruments, Inc.*, 517 U.S. 370 (1996) 34

McLaughlin v. *Richland Shoe Co.*, 486 U.S. 128 (1988) 28

Morss v. *Union Form Co.*, 39 F. 468 (C.C.D. Conn. 1889) 20

Nat'l Folding Box & Paper Co. v. *Robertson's Estate*, 125 F. 524 (C.C.D. Conn. 1903) 22

Nat'l Inst. for Strategic Tech. Acquisition & Commercialization v. *Nissan of N. Am.*, 2012 WL 3600289 (E.D. Mich. 2012) 9

National Folding-Box & Paper Co. v. *Elsas*, 86 F. 917 (2d Cir. 1898) 22

TABLE OF AUTHORITIES—continued

Page(s)

Octane Fitness, LLC v. *ICON Health & Fitness, Inc.*, 134 S. Ct.1749 (2014) 22, 30, 32

Ornelas v. *United States*, 517 U.S. 690 (1996) 36

Overman Cushion Tire Co. v. *Goodyear Tire & Rubber Co.*, 66 F.2d 361 (2d Cir. 1933) 22

Pierce v. *Underwood*, 487 U.S. 552 (1988) 36

Powell v. *Home Depot U.S.A., Inc.*, 663 F.3d 1221 (Fed. Cir. 2011) 29, 34

Radware, Ltd. v. *F5 Networks, Inc.*, 2015 WL 7960004 (N.D. Cal. 2015) 8

Russell v. *Place*, 21 F. Cas. 57 (C.C.N.D.N.Y. 1871) 23

Safeco Ins. Co. of Am. v. *Burr*, 551 U.S. 47 (2007) 25, 28

Salve Regina Coll. v. *Russell*, 499 U.S. 225 (1991) 36

Sanders v. *Logan*, 21 F. Cas. 321 (C.C.W.D. Pa. 1861) 20

In re Seagate Tech. LLC, 497 F.3d 1360 (2007) ..... *passim*

Seymour v. *McCormick*, 57 U.S. (16 How.) 480 (1854) 2, 20, 31, 33

TABLE OF AUTHORITIES—continued

Page(s)

Shady Grove Orthopedic Assocs., P.A. v. *Allstate Ins. Co.*, 559 U.S. 393 (2010) 11

Smith v. *Prior*, 22 F. Cas. 629 (C.C.D. Cal. 1873) 27

Smith v. *Wade*, 461 U.S. 30 (1983) 24, 25

Stryker Corp. v. *Intermedics Orthopedics, Inc.*, 96 F.3d 1409 (Fed. Cir. 1996) 8, 10

Sutton v. *Gulf Smokeless Coal Co.*, 77 F.2d 439 (4th Cir. 1935) 22

Teese v. *Huntingdon*, 64 U.S. 2 (1859) 26, 32

Teva Pharmaceuticals USA, Inc. v. *Sandoz, Inc.*, 135 S. Ct. 831 (2015) 34, 35

Texas Dep't of Housing and Community Affairs v. *The Inclusive Communities Project, Inc.*, 135 S. Ct. 2507 (2015) 19

Tilghman v. *Proctor*, 125 U.S. 136 (1888) 24

Toledo Computing Scale Co. v. *Moneyweight Scale Co.*, 178 F. 557 (C.C.N.D. Ill. 1910) 27

Topliff v. *Topliff*, 145 U.S. 156 (1892) 26

Toshiba Corp. v. *Imation Corp.*, 990 F. Supp. 2d 882 (W.D. Wis. 2013) 8

TABLE OF AUTHORITIES—continued

Page(s)

Underwater Devices Inc. v. *Morrison-Knudsen Co.*, 717 F.2d 1380 (Fed. Cir. 1983) ..... *passim*

Van Kannel Revolving Door Co. v. *Uhrich*, 297 F. 363 (8th Cir. 1924) 22

Vrooman v. *Penhollow*, 222 F. 894 (6th Cir. 1915) 27

W.S. Godwin Co. v. *Int'l Steel Tie Co.*, 29 F.2d 476 (6th Cir. 1928) 26

Welling v. *La Bau*, 35 F. 302 (C.C.S.D.N.Y. 1888) 27

Weston Elec. Instrument Co. v. *Empire Elec. Instrument Co.*, 155 F. 301 (C.C.S.D.N.Y. 1907) 21, 22

Statutes

35 U.S.C.
§ 271(b) 23
§ 284 ..... *passim*
§ 285 ..... 30, 35, 36
§ 287 9
§ 298 ..... 17, 18, 19, 28

Other Authorities

1 The Correspondence of Isaac Newton (Turnbull ed., 1959) 13

2 Walter Malins Rose, A Code of Federal Procedure (1907) 21

Scott Baker, *Can the Courts Save Us From the Patent Crisis?*, 88 Tex. L. Rev. 593 (2010) 11

TABLE OF AUTHORITIES—continued

Page(s)

Chris Barry et al., *2015 Patent Litigation Study* (2015) 10

Christopher A. Cotropia & Mark A. Lemley, *Copying in Patent Law*, 87 N.C. L. Rev. 1421 (2009) 12

Thomas F. Cotter, *An Economic Analysis of Enhanced Damages and Attorney's Fees for Willful Patent Infringement*, 14 Fed. Cir. B.J. 291 (2004) 15

Dep't of Energy, *The History of the Light Bulb* (Nov. 22, 2013) 13

Executive Office of the President, *Patent Assertion & U.S. Innovation* (2013) 12

Fed. Trade Comm'n, *To Promote Innovation: The Proper Balance of Competition and Patent Law and Policy* (Oct. 2003) 14, 15, 17

Bronwyn H. Hall & Rosemarie Ham Ziedonis, *The Patent Paradox Revisited: An Empirical Study of Patenting in the U.S. Semiconductor Industry, 1979–1995*, 32 Rand J. Econ. 101 (2001) 15

Kimberly A. Moore, *Empirical Statistics on Willful Patent Infringement*, 14 Fed. Cir. B.J. 227 (2004) 12

National Research Council, *A Patent System for the 21st Century* 118 (Merrill et al. eds., 2004) 12, 14, 15, 29

TABLE OF AUTHORITIES—continued

Page(s)

John B. Pegram, *The Willful Patent Infringement Dilemma and the 7th Amendment*, 86 J. Pat. & Trademark Off. Soc'y 271 (2004) 34

Suzanne Scotchmer, *Standing on the Shoulders of Giants: Cumulative Research and the Patent Law*, 5 J. Econ. Perspectives 29 (1991) 13

In Re Seagate*: An Empirical Study*, 97 Iowa L. Rev. 417 (2012) 10

Christopher B. Seaman, *Willful Patent Infringement and Enhanced Damages After* In Re Seagate*: An Empirical Study*, 97 Iowa L. Rev. 417 (2012) 10

INTEREST OF THE *AMICUS CURIAE*

BSA | The Software Alliance is an association of the world's leading software and hardware technology companies. It promotes policies that foster innovation, growth, and a competitive marketplace for commercial software and related technologies.

BSA's members advocate a balanced approach to patent enforcement litigation. BSA members are among the Nation's leading technology companies, producing much of the hardware and software that power computer and telecommunication networks. As a result, they are frequently targets of unjustified patent lawsuits. BSA members also are leading innovators that hold tens of thousands of patents. BSA members are thus deeply concerned with maintaining the appropriate value of their substantial intellectual property assets.[1]

The members of BSA include Adobe Systems, Altium, ANSYS, Apple, Autodesk, Bentley Systems, CA Technologies, CNC Software-Mastercam, DataStax, Dell, IBM, Intuit, Microsoft, Minitab, Oracle, PTC, SAS Institute, Salesforce, Siemens PLM Software, Symantec, Tekla, The MathWorks, and Trend Micro.

---

[1] Pursuant to Rule 37.6, *amicus* affirms that no counsel for a party authored this brief in whole or in part and that no person other than *amicus* and its counsel made a monetary contribution to its preparation or submission. The parties' letters consenting to the filing of this brief have been filed with the Clerk's office.

INTRODUCTION AND SUMMARY OF ARGUMENT

The Patent Act carefully balances two important interests—"the need to promote innovation and the recognition that imitation and refinement through imitation are both necessary to invention itself and the very lifeblood of a competitive economy." *Bonito Boats, Inc.* v. *Thunder Craft Boats, Inc.*, 489 U.S. 141, 146 (1989).

Compensatory damages ensure that a patentee is made whole upon a showing of patent infringement. Enhanced damages punish extraordinarily wrongful conduct and thereby deter others from engaging in such violations. The standard for enhanced damages therefore should promote the goals of the Patent Act, not thwart them.

Shortly after Congress eliminated automatic trebling of patent infringement awards, this Court held that enhanced damages are available "where the injury is wanton or malicious." *Seymour* v. *McCormick*, 57 U.S. (16 How.) 480, 489 (1854).

The current Federal Circuit standard permits enhanced damages only upon a showing of both objective and subjective wrongfulness: "that the infringer acted despite an objectively high likelihood that its actions constituted infringement of a valid patent" and that "this objectively-defined risk * * * was either known or so obvious that it should have been known to the accused infringer." *In re Seagate Tech. LLC*, 497 F.3d 1360, 1371 (2007).

Petitioners and their *amici* argue that enhanced damages should be available based upon consideration of the "totality of the circumstances," including

proof of "willful" infringement, which requires the plaintiff to show only that the defendant acted "recklessly" or engaged in bad-faith litigation conduct. Petitioners' standards are in practical effect equivalent to the pre-*Seagate* rule that imposed enhanced damages if the defendant knew of the asserted patent and failed to investigate whether the patent was valid and whether the defendant's actions constituted infringement.

That approach will significantly impede innovation. *First*, it encourages unjustified litigation and coerced settlements without regard to the underlying merits—diverting resources into litigation and away from investment in innovation. *Second*, innovation almost always results from building on past inventions, but the legal rules proposed by petitioners will deter innovators from keeping up with changes in technology by reading relevant patents—for fear that "knowledge" of the patent will support an enhanced damages claim.

This Court's precedents preclude that result. An enhanced damages award requires proof that the defendant actually knew of the existence of the asserted patent and actually knew that its actions infringed the patent. Moreover, proof that the defendant's actions were objectively reasonable bars enhanced damages, because the actual knowledge standard cannot be satisfied when the defendant's actions are objectively reasonable.

ARGUMENT

Enhanced Damages Are Available Only For Extraordinarily Wrongful Infringement.

A. The Nebulous Standards Advocated By Petitioners And Their *Amici* Would Significantly Impede Innovation.

Petitioners and their *amici* propose a variety of standards for awarding enhanced damages, but all of their tests share two key characteristics. *First*, they would make such claims far easier to assert and much less susceptible to pretrial dismissal because each requires assessment of the totality of the circumstances under a vague legal standard.

Second, the proposed standards will open the door to claims based solely on proof that the defendant was aware of the patent and continued to produce the infringing article. In practical effect, that reintroduces the standard overturned in *Seagate*.

These standards will have very substantial adverse consequences: coercing unjustified settlements that divert resources into litigation, and preventing innovators from building on prior inventions by deterring them from reading relevant patents—for fear that "knowledge" of the patent will support an enhanced damages claim.

1. *The standards proposed by petitioners and their* amici *will permit few pretrial dismissals and have the same practical effect as the pre-*Seagate *test.*

Under the enhanced damages standards proposed by petitioners and their *amici*, a plaintiff's eligibility for enhanced damages would be based on an

assessment of the "totality of the circumstances" to determine whether the defendant's actions were sufficiently culpable, measured against one of several vague standards. For example:

- Petitioner Halo states that a court should "balance all relevant factors" (Br. 2) and impose enhanced damages "whenever the circumstances require it." *Id.* at 10. Those "circumstances" could include "bad faith infringement" (*ibid.*); imposition of "unnecessary expense and burden on the patent holder" (*ibid.*); "culpable conduct" (*id.* at 18); "purposely ignoring a patentee's attempts to license" (*ibid.*); "failing to investigate a known patent" (*id.* at 27); and "any actions the defendant took that inflicted further expense on the plaintiff" (*ibid.*).

- In petitioner Stryker's view, a court should consider "the totality of the circumstances" (Br. 14) and award enhanced damages when the defendant's "conduct demonstrated heightened culpability or wrongfulness, typically beyond mere negligence." *Id.* at 33.

- The United States asserts that enhanced damages are appropriate whenever conduct is "egregious." Br. 7. Although "[t]he paradigmatic enhanced-damages case" is when "the defendant deliberately copied the plaintiff's patent invention, despite (1) being aware of the patent, and (2) lacking any contemporaneous, good-faith belief that the copying was authorized or otherwise lawful" (*id.* at 18), "deliberate copying" is not required:

> "bad faith" or "reckless conduct" justifies an award of enhanced damages.

These vague standards would make enhanced damages claims easy for plaintiffs to assert and extremely difficult for defendants to defeat prior to trial. A judge obligated to consider the totality of the circumstances to determine whether a defendant acted "egregiously" would be hard-pressed to grant a motion to dismiss or a motion for summary judgment.

Even more significant, these standards would permit claims for enhanced damages based on proof that a defendant was aware of the plaintiff's patent and continued to produce or sell the allegedly infringing product.

Thus, petitioner Stryker states that enhanced damages may be awarded if "the defendant continued to infringe after it knew or reasonably should have known of the patent." Br. 38. The key inquiry under this proposal is whether the defendant "reasonably investigated and evaluated the possibility of infringement." *Ibid.* Accord Halo Br. 27 (enhanced damages available for "failing to investigate a known patent"); U.S. Br. 20 (enhanced damages available "if the defendant initially develops its own product independently, but continues to make and sell it even after becoming aware that it is covered by a competitor's valid patent").

These standards are substantively equivalent to the enhanced damages standard that prevailed prior to *Seagate*. In *Underwater Devices Inc.* v. *Morrison-Knudsen Co.*, 717 F.2d 1380, 1389-90 (Fed. Cir. 1983), the Federal Circuit had held that, "[w]here

* * * a potential infringer has actual notice of another's patent rights, he has an affirmative duty to exercise due care to determine whether or not he is infringing."

The tests proposed by petitioners and their *amici* are similarly satisfied by evidence that a defendant was aware of the patent it subsequently was found to infringe. Even though some of petitioners' tests do not expressly incorporate a duty to investigate, they will in fact impose one, because a defendant that fails to investigate will be labeled a "culpable" "willful" infringer. The only way for a company to defend itself from this charge will be to show that—at the time that it learned of the patent—it investigated the patent and formed a good faith defense to infringement, precisely what *Underwater Devices* required.[2]

Moreover, the threshold requirement under these standards—that the defendant "know" of the asserted patent—will not restrict the availability of en-

---

[2] The United States recognizes that "[a]n innocent infringer who did not intentionally copy a patented invention or engage in other willful, bad-faith, or aggravated misconduct" should be able to avoid enhanced damages. U.S. Br. 20-21. But the liability standard that it proposes—whether the defendant's conduct was "egregious"—does not permit such fine distinctions. And the United States would limit this defense to liability to situations in which the defendant investigated the risk of infringement liability at the time it first learned of the patent; a defense formed later, such as in response to a claim of patent infringement, does *not* bar enhanced damages in the government's view. See *id.* at 27-28. The government thus endorses liability when the defendant (1) knows about a patent that is later shown to infringe, and (2) failed to form a contemporaneous, objectively-reasonable basis as to why its conduct does not infringe that patent.

hanced damages. The plaintiff will not be limited to relying on a demand letter from the patent holder that specifies both the asserted patent and the allegedly infringing article. Rather, plaintiffs will argue, with some support in decided cases, that other evidence of "knowledge" suffices:

- Citation of the asserted patent by the defendant or examiner during the defendant's earlier prosecution of a patent application, even if the defendant's patent is wholly unrelated to the allegedly infringing product. See, *e.g.*, *Radware, Ltd.* v. *F5 Networks, Inc.*, 2015 WL 7960004, at *29 (N.D. Cal. 2015).

- Evidence that one of the defendant's employees read or even just downloaded the patent—even if the employee was uninvolved in the development of the allegedly infringing article. See, *e.g.*, *Stryker Corp.* v. *Intermedics Orthopedics, Inc.*, 96 F.3d 1409, 1415-16 (Fed. Cir. 1996).

- Inclusion of a patent on a lengthy list of patents that are supposedly essential for a standard. See, *e.g.*, *Toshiba Corp.* v. *Imation Corp.*, 990 F. Supp. 2d 882, 909 (W.D. Wis. 2013) (inclusion of the two patents in suit on a "haystack" list of 360 purportedly standard essential patents for DVD discs "perhaps * * * establishes that defendants *should* have known what the patents in suit covered * * *.").

- Employment by the defendant of a named inventor of the asserted patent. See, *e.g.*, *Advanced Data Access LLC* v. *Nanya Tech.*

Corp., 2012 WL 10873894, at *3-4 (E.D. Tex. 2012).

- Discussion of the asserted patent at an industry conference attended by one of the defendant's employees. See, *e.g.*, *Nat'l Inst. for Strategic Tech. Acquisition & Commercialization* v. *Nissan of N. Am.*, 2012 WL 3600289, at *4-5 (E.D. Mich. 2012).

- Evidence that the asserted patent is well-known to those in the industry. See, *e.g.*, *Investpic, LLC* v. *FactSet Research Sys., Inc.*, 2011 WL 4591078, at *2 (D. Del. 2011).

- Evidence that the defendant is aware of a competing product manufactured or licensed by the patentee, or even of an unrelated product, that is marked with the asserted patent. See, *e.g.*, *Finjan, Inc.* v. *Sophos, Inc.*, 2015 WL 7075573, at *4 (N.D. Cal. 2015).

- Virtual marking, authorized by 35 U.S.C. § 287, enables the patentee to list on a website (rather than on the product) the patents covering its products, which permits a patentee to continuously expand the list of patents covered. A single product is often marked as protected by hundreds of patents.

In sum, the standards advocated by petitioners and their *amici* will throw open the door to assertion of claims for enhanced damages.

2. *The proposed enhanced damages standards will deter innovation and impose very substantial unjustified costs.*

If adopted by this Court, the standards proposed by petitioners and their *amici* will have significant adverse effects.

First, the increased leverage provided by a vague standard governing enhanced damages—including the cost and uncertainty of a trial to resolve enhanced damages claims—means that more defendants will pay settlements to avoid the risk of draconian liability, even if the underlying infringement claim lacks merit. Those increased costs will divert resources that otherwise could be used to fund creation of new products, services, and jobs.

Patent verdicts can be extremely large. Compensatory awards often reach nine figures, and verdicts have occasionally reached a billion dollars or more. Chris Barry et al., *2015 Patent Litigation Study* (2015). Indeed, the *Stryker* case at issue here involves a total verdict exceeding $210 million.

Doubling or trebling those compensatory damages yields enormous sums. "[R]ecent compensatory damages awards * * * [have] rais[ed] the possibility of an enhancement in the range of hundreds of millions of dollars." Christopher B. Seaman, *Willful Patent Infringement and Enhanced Damages After* In Re Seagate*: An Empirical Study*, 97 Iowa L. Rev. 417, 422 (2012).

The potential enormity of the claims provides patentees with substantial leverage, regardless of the merits of the underlying infringement claim. The Court has recognized this "danger of vexatious litiga-

tion" in a variety of contexts in which expansive liability combines with vague or unduly expansive liability standards. *Blue Chip Stamps* v. *Manor Drug Stores*, 421 U.S. 723, 740 (1975). Accord *Shady Grove Orthopedic Assocs., P.A.* v. *Allstate Ins. Co.*, 559 U.S. 393, 445 n.3 (2010) (Ginsburg, J., dissenting) ("[a] court's decision to certify a class * * * places pressure on the defendant to settle even unmeritorious claims").

The same phenomenon applies in patent cases. See, *e.g.*, Scott Baker, *Can the Courts Save Us From the Patent Crisis?*, 88 Tex. L. Rev. 593, 598 (2010) (describing how entities will "use[] the threat of a punitive remedy" like treble damages "to extract a settlement that exceeds what [they] would have gotten if [they] licensed [their] patent *ex ante*").

Indeed, it is a particular threat in the patent context, where, as this Court has recognized on multiple occasions, "an 'industry has developed in which firms use patents not as a basis for producing and selling goods but, instead, primarily for obtaining licensing fees.'" *Commil USA, LLC* v. *Cisco Sys., Inc.*, 135 S. Ct. 1920, 1930 (2015) (quoting *eBay, Inc.* v. *MercExchange, L.L.C.*, 547 U.S. 388, 396 (2006) Kennedy, J., joined by Stevens, Souter, and Breyer, JJ., concurring)). "For these firms," litigation "can be employed as a bargaining tool to charge exorbitant fees to companies that seek to buy licenses to practice the patent." *eBay, Inc.*, 547 U.S. at 396 (Kennedy, J., concurring).

A recent report assessing claims by these nonpracticing entities confirmed that patent owners may seek "to settle out of court for amounts that have not so much to do with the economic value of their pa-

tents or the probability that they have infringed," because settlements are "affected more by the parties' relative opportunity costs of going to trial and attitudes towards risk." Executive Office of the President, *Patent Assertion & U.S. Innovation*, at 6 (2013), http://tinyurl.com/lvk6ajl. Because the non-practicing entity has little at stake other than legal fees, and much to gain, it will be much more willing to go to trial than the defendant—and therefore can force an unjustified settlement, particularly when the downside risk to the defendant includes an award of multiple damages.

Use by plaintiffs of this increased leverage to coerce unjustified settlements will not be a one-off phenomenon. Every plaintiff will want this "benefit"—and claims for enhanced damages will be asserted in almost every patent.

That is what happened prior to *Seagate*, under the *Underwater Devices* regime. Now-Judge Moore documented that over 90% of complaints contained allegations of willful infringement. Kimberly A. Moore, *Empirical Statistics on Willful Patent Infringement*, 14 Fed. Cir. B.J. 227, 232 (2004). See also Christopher A. Cotropia & Mark A. Lemley, *Copying in Patent Law*, 87 N.C. L. Rev. 1421, 1441 (2009) (over 80%). As the National Research Council observed, "willfulness is asserted in most cases * * * [and] often overshadow[s] the litigation." Committee on Intellectual Property Rights in the Knowledge-Based Economy, National Research Council, *A Patent System for the 21st Century* 118 (Merrill et al. eds., 2004) ("*NRC Report*").

The increased costs to the companies targeted in these lawsuits—significantly greater legal fees, dis-

covery costs, and large settlement payments—inflict serious harm on our economy. Funds earmarked for investments to create new products or services will be diverted to legal budgets, decreasing innovation and job creation. And some costs will be passed on to consumers, resulting in higher prices for goods and services.

Second, the legal standards advocated by petitioners and their *amici* will undermine the patent law's critical function of disseminating information about technological advances.

If evidence that even one engineer has viewed or downloaded or otherwise learned about a patent could be the "smoking gun" sufficient to show "knowing infringement" (see page 8, *supra*), then companies will respond by directing their employees not to read the patents of others.

But sharing inventions is essential for further innovation. Isaac Newton's famous acknowledgment, "[i]f I have seen further, it is by standing on the shoulders of giants" recognized that fact. 1 The Correspondence of Isaac Newton: 1661-1675, at 416 (Turnbull ed., 1959). Thomas Edison's invention of the low-cost, long-lasting incandescent light bulb rested on his unique combination of prior discoveries in this area. Dep't of Energy, *The History of the Light Bulb* (Nov. 22, 2013), http://goo.gl/LFqxOU. See also Suzanne Scotchmer, *Standing on the Shoulders of Giants: Cumulative Research and the Patent Law*, 5 J. Econ. Perspectives 29 (1991) ("Most innovators stand on the shoulders of giants, and never more so than in the current evolution of high technologies, where almost all technical progress builds on a foundation provided by earlier innovators.").

That is why "[t]he disclosure required by the Patent Act is 'the quid pro quo of the right to exclude.'" *J.E.M. Ag Supply, Inc.* v. *Pioneer Hi-Bred Int'l, Inc.*, 534 U.S. 124, 142 (2001). That disclosure is the lifeblood of future innovation.

The legal standards proposed by petitioners and their *amici*, however, give companies a weighty incentive to *prevent* engineers and inventors from reading patents. That is precisely what happened when the *Underwater Devices* standard governed enhanced damages. The National Research Council in 2004 described the "perverse * * * consequences" of the *Underwater Devices* standard: "exposure to claims of willful infringement has led to a practice of deliberately avoiding learning about issued patents, a development sharply at odds with the disclosure function of patent law." *NRC Report* at 119. The legal standard

> creates a strong disincentive to read patents, irrespective of whether any infringement allegations are made. The mere existence of the doctrine in its current form means that any time an individual or company learns of a patent that might bear on its products, the company is at risk.

Ibid. Indeed, "in-house counsel and many outside lawyers regularly advise their clients not to read patents if they can avoid it." *Ibid.* Accord Fed. Trade Comm'n, *To Promote Innovation: The Proper Balance of Competition and Patent Law and Policy*, Ch. 5, at 30 (Oct. 2003) ("*FTC Report*"), http://tinyurl.com/6wk4p.

The result was a chill on innovation, because a ban on examining patents could "significantly interfere with gaining the knowledge of others' patents necessary for planning a noninfringing business or research strategy." *Ibid.* See also Thomas F. Cotter, *An Economic Analysis of Enhanced Damages and Attorney's Fees for Willful Patent Infringement*, 14 Fed. Cir. B.J. 291, 318 (2004) ("the prospect of incurring enhanced damages liability may overdeter firms from designing around or otherwise coming close to (but not overstepping) the patent boundary").

Petitioner Stryker and others suggest that a company could avoid this risk by obtaining an opinion-of-counsel letter for each possibly implicated patent—stating that the company's proposed course of action would not constitute infringement. See Stryker Br. 41-42. But that "solution" simply creates more problems.

To begin with, opinion of counsel letters are expensive. The *Underwater Devices* regime created "a cottage industry of lawyers providing such opinions at a cost ranging from $10,000 to $100,000 per opinion." *NRC Report* at 118-119.

These costs are compounded by a number of factors. A single device or software program can potentially implicate large numbers of patents. For example, "a given semiconductor product * * * will often embody hundreds if not thousands of 'potentially patentable' technologies." Bronwyn H. Hall & Rosemarie Ham Ziedonis, *The Patent Paradox Revisited: An Empirical Study of Patenting in the U.S. Semiconductor Industry, 1979–1995*, 32 Rand J. Econ. 101, 110 (2001).

Moreover, because of the complexity of modern supply chains, one company may receive a demand letter about a component incorporated into its end products, but not have first-hand insight into that component—information that is critical to make informed decisions about patent validity and infringement.

Finally, the potential relevance of a patent to a planned device or computer-implemented innovation (such as a software program) often is not evident from its face—plaintiffs in infringement actions press broad, unanticipated constructions of patent terms. And a company may be said to have knowledge of a patent if it is read by one engineer, even though that engineer (who may be one of thousands) does not work on the product that is later asserted to infringe the patent.

For these reasons, the answer suggested by petitioners—that a company should evaluate and then seek a license for every possible relevant patent of which it could be said to be aware—would impose an impossible burden. A company cannot practically evaluate the validity and applicability of the thousands of patents about which it could be subsequently be said to have actual or constructive knowledge. A company cannot predict the broad ways in which a patentee may attempt to interpret its claims in order to assert a case for infringement. And a company could not afford to license every patent possibly falling within these two broad categories without raising the cost of innovation very significantly.

Innovative companies therefore will often have no realistic alternative other than instructing their engineers not to look at patents, depriving them of

the beneficial public notice function of the patent system. And, when engineers or others do look at patents, the company may be forced to pay enormous sums for advice-of-counsel letters, the vast majority of which will never see the light of day.[3]

The Federal Trade Commission concluded that the *Underwater Devices* standard "introduce[d] unnecessary uncertainty, raise[d] risks, and reduce[d] efficiency." *FTC Report*, Ch. 5, at 30. This Court should not endorse a legal rule for enhanced damages that will have precisely the same adverse effects.

B. Section 284's Enhanced Damages Standard Requires A Patentee To Establish Highly Culpable Infringement.

Petitioners and their *amici* employ a variety of vague terms in their standards for enhanced damages—for example, "willful", "culpable", "heightened culpability", and "wrongfulness." But these terms provide no real guidance in determining which conduct merits enhanced damages, and instead will create uncertainty as lower courts make wholly subjective judgments and then apply the appropriate label.

Most important, none of these terms appears in Section 284. Petitioners and their *amici* cherry-pick words from judicial opinions, or other sources, that

---

[3] Congress barred plaintiffs from using the failure of a defendant to acquire a contemporaneous opinion-of-counsel letter as *affirmative* evidence of willful infringement. See 35 U.S.C. § 298 (added by Section 17(a) of the Leahy-Smith America Invents Act ("AIA"), Pub. L. No. 112-29 (2011)). But an opinion of counsel would be an essential part of the *defense*—to show that the defendant acted in good faith in proceeding notwithstanding its knowledge of the asserted patent.

predated the 1952 enactment of this provision, and then attempt to base the enhanced damages standard on the meaning of one or two words alone—as if they *did* appear in Section 284.

That makes no sense. The relevant question is how the courts making enhanced damages rulings prior to 1952 understood those terms *in the context of their enhanced damages determinations*, not how the terms might be understood in isolation today. "Willful" in these decisions is thus a shorthand for the standard that those cases apply, not a statutory term to be interpreted without reference to the facts of those cases.

Before turning to that inquiry, however, it is important to note that Congress very recently made clear its view of the proper enhanced damages inquiry by *enacting* statutory language. Section 298 of the Patent Act, added in 2011 by the AIA, provides:

> The failure of an infringer to obtain the advice of counsel with respect to any allegedly infringed patent, or the failure of the infringer to present such advice to the court or jury, may not be used to prove that the accused infringer *willfully infringed* the patent or that the infringer intended to induce infringement of the patent.

35 U.S.C. § 298 (emphasis added).

This provision plainly addresses enhanced damages claims. As discussed above, that is the context in which opinion-of-counsel questions have arisen. And the Federal Circuit's *Seagate* decision, which governed enhanced damages at the time the AIA was enacted, characterized "willful infringement" as the

standard: "an award of enhanced damages requires a showing of willful infringement." *In re Seagate Tech.*, 497 F.3d 1360, 1368 (Fed. Cir. 2007).[4]

By enacting Section 298 to address enhanced damages claims and specifically referencing *Seagate*'s standard, Congress made clear that its legislative action was premised on the existing legal standard—and ratified that standard. Cf. *Texas Dep't of Housing and Community Affairs* v. *The Inclusive Communities Project, Inc.*, 135 S. Ct. 2507, 2520 (2015) ("The [1988 Fair Housing Act] amendments included three exemptions from liability that assume the existence of disparate-impact claims. The most logical conclusion is that the three amendments were deemed necessary because Congress presupposed disparate impact under the FHA as it had been enacted in 1968").[5]

If the Court rejects that approach, however, the pre-1952 decisions establish a similarly high bar for enhanced damages claims.

---

[4] Congress was well aware of the *Seagate* standard and cited it repeatedly with approval during consideration of the AIA. See Zimmer Br. 26-30; Pulse Br. 22-25.

[5] The United States does not address this argument; it asserts only (Br. 27) that statements in the course of Congress's consideration of the AIA do not demonstrate ratification of *Seagate*. The government also points to a statement by Senator Kyl to the effect that Congress left preexisting standards undisturbed. U.S. Br. 27 n.21. At the time of the AIA, however, *Seagate* governed, and the Senator was making clear that Congress intended to leave *Seagate* in place.

1. The pre-1952 decisions codified in Section 284 require proof of an extremely high degree of culpability.

After Congress rendered enhanced patent damages permissive in the Patent Act of 1836, this Court stressed "the very great injustice" of the prior rule, which made enhancement mandatory regardless of the infringer's culpability. *Seymour*, 57 U.S. at 488. The mandatory rule treated a "defendant who acted in ignorance or good faith" on the same terms as "the wanton and malicious pirate." *Ibid.* Only "where the injury is wanton or malicious" would multiple damages be justified. *Id.* at 489.

That same year, in *Corning* v. *Burden*, 56 U.S. 252 (1854), the Court similarly explained that evidence "that the defendant has acted in good faith, and is not a wanton infringer of the plaintiff's rights" meant that the defendant "ought not * * * to be subjected to the same stringent and harsh rule of damages which might be justly inflicted on a mere pirate." *Id.* at 271. Cf. *Livingston* v. *Woodworth*, 56 U.S. 546, 560 (1853) (declining to award penalty in equitable action by patentee because the defendants were, "in no correct sense, wanton infringers").

The lower courts during this period also applied this Court's "wanton and malicious" standard to limit enhanced damages to intentional, egregious infringement. See, *e.g.*, *Morss* v. *Union Form Co.*, 39 F. 468, 474 (C.C.D. Conn. 1889) (increasing damages on account of "a willful or wanton violation of the complainants' exclusive rights"); *Burdell* v. *Denig*, 4 F. Cas. 695, 701 (C.C.S.D. Ohio 1865) ("wanton and persistent infringement"); *Sanders* v. *Logan*, 21 F. Cas. 321, 323 (C.C.W.D. Pa. 1861) ("A court of law

may treble such a verdict where the defendant has acted wantonly or vexatiously."); *Bell* v. *McCullough*, 3 F. Cas. 108, 109 (C.C.S.D. Ohio 1858) ("wanton and persevering infringers").

Indeed, *Seymour's* requirement of "wanton or malicious acts" sufficient to justify punishment was interpreted by the lower courts to require deliberate wrongdoing of the sort meriting criminal sanctions. See, *e.g.*, *Weston Elec. Instrument Co.* v. *Empire Elec. Instrument Co.*, 155 F. 301, 301 (C.C.S.D.N.Y. 1907); *Creagmile* v. *John Bean Mfg. Co.*, 32 F. Supp. 646, 648 (S.D. Cal. 1940) ("[w]e cannot agree * * * that the record justifies any finding of 'deliberate, willful and flagrant' infringement by defendants"), rev'd on other grounds, 123 F.2d 182 (9th Cir. 1941); *Clark* v. *Schieble Toy & Novelty Co.*, 248 F. 276, 284 (6th Cir. 1917) (denying treble damages where infringer "can scarcely be treated as having intended a willful injury"); *Expanded Metal Co.* v. *Gen. Fireproofing Co.*, 247 F. 899, 902 (N.D. Ohio 1917) (same).

Discussing the early cases, a treatise explained that "[i]n general it is necessary to show that the infringement was deliberate, wanton, and persistent" to recover enhanced damages, and "mere persistence if the case was a doubtful one has been held not ground for treble damages." 2 Walter Malins Rose, A Code of Federal Procedure, 1107-1108 (1907).

Congress codified this standard when it enacted Section 284 as part of the Patent Act of 1952. *General Motors Corp.* v. *Devex Corp.*, 461 U.S. 648, 654 (1983) (where "Congress has reenacted statutory language that the courts had interpreted in a particular way * * *, it may well be appropriate to infer that Congress intended to adopt the established judi-

cial interpretation"). Although the language of the provision was slightly altered, that was simply part of a "reorganization in language to clarify the statement of the statutes." *Id.* at 652 n.6. Cf. *Octane Fitness, LLC* v. *ICON Health & Fitness, Inc.*, 134 S. Ct. 1749, 1753 (2014) (deeming similar 1952 alterations to section 285 nonsubstantive).

2. *Enhanced damages are available only if the plaintiff proves that the defendant actually knew it was engaging in infringement.*

A plaintiff seeking enhanced damages must prove, at a minimum, that the defendant actually knew it was infringing the plaintiff's patent. Petitioners and their *amici* are wrong in asserting that recklessness or some lesser standard is sufficient.

First, the pre-1952 cases in which enhanced damages were awarded consistently relied on proof that the defendants had actual knowledge of the infringing nature of their actions. See, *e.g.*, *Sutton* v. *Gulf Smokeless Coal Co.*, 77 F.2d 439, 442 (4th Cir. 1935) ("there was deliberate and willful infringement"); *Overman Cushion Tire Co.* v. *Goodyear Tire & Rubber Co.*, 66 F.2d 361, 362 (2d Cir. 1933) ("the infringement by the appellant was conscious and deliberate"); *Van Kannel Revolving Door Co.* v. *Uhrich*, 297 F. 363, 369 (8th Cir. 1924) ("the defendants persistently and willfully infringed the complainant's patent"); *National Folding-Box & Paper Co.* v. *Elsas*, 86 F. 917, 923 (2d Cir. 1898) (defendants were "deliberate" infringers); *Weston Elec. Instrument Co.*, 155 F. at 301 ("deliberate and intentional infringement"); *Nat'l Folding Box & Paper Co.* v. *Robertson's Estate*, 125 F. 524, 525 (C.C.D. Conn. 1903) (despite "a palpable infringement," defendant decided "in cold

blood, to fight to the last ditch, rather than pay any considerable sum" and "[i]n that battle the issue of noninfringement has never been suggested"); *Russell* v. *Place*, 21 F. Cas. 57, 58 (C.C.N.D.N.Y. 1871) ("the infringement seems deliberate and intentional").

Second, an analogous provision of the Patent Act specifies an actual knowledge requirement. Section 271(b) imposes liability on a person who "actively induces infringement of a patent." 35 U.S.C. § 271(b). This Court has concluded that active inducement requires "proof the defendant knew the acts were infringing." *Commil USA*, 135 S. Ct. at 1928. See also *Global-Tech Appliances, Inc.* v. *SEB S.A.*, 131 S. Ct. 2060, 2068 (2011). The Court specifically rejected a recklessness standard. *Id.* at 2071.

Inducement liability resembles enhanced damages in that both seek to identify acts that are wrongful based on the actor's mental state. It would be peculiar if the test for identifying "wanton" conduct leading to multiple damages were less demanding than the test for "active inducement" and single damages.[6]

Third, patent infringement is a strict liability cause of action: the plaintiff may prevail even if the defendant acted non-negligently and developed its invention independently. There accordingly is a significant risk that a recklessness standard could be

---

[6] There is one difference between these two types of liability: a plaintiff seeking enhanced damages cannot prevail if the defendant demonstrates an objectively reasonable basis to challenge the patent's validity. *Commil*'s reliance on the presumption of validity is inapplicable in the enhanced damages context, because the plaintiff is seeking punitive damages, not compensation for infringement.

misapplied to impose liability only for negligence—because the contrast with the infringement liability standard would be significant even though it did not rise to the level of recklessness. The situation is significantly different than, for example, the typical tort context in which proof of negligence is required to establish liability and the contrast with a recklessness standard is clearer.[7]

Fourth, this Court has indicated that enhanced damages for infringement are a species of "punitive damages." *Tilghman* v. *Proctor*, 125 U.S. 136, 144 (1888).

At the time of this Court's decisions addressing the standard for enhanced infringement damages—the early and mid-Nineteenth Century—punitive damages required proof that the defendant actually knew that he was acting wrongfully. Thus, in *Smith* v. *Wade*, 461 U.S. 30 (1983), the Court divided over whether the law at that time obligated a plaintiff seeking punitive damages to show that the defendant acted with actual malice. Compare 461 U.S. at 39-41 (actual malice not required) with *id.* at 57 (Rehnquist J., joined by Burger, CJ., and Powell, J., dissenting) ("evil intent" required). But the majority did not dispute that proof of "[c]onsciousness of consequences or of wrongdoing" was required. *Id.* at 37

---

[7] Recklessness is sufficient for enhanced damages in copyright, but there the basic cause of action requires proof of wrongful conduct—copying. See *Feist Publ'ns, Inc.* v. *Rural Tel. Serv. Co.*, 499 U.S. 340, 361 (1991) ("To establish infringement, two elements must be proven: (1) ownership of a valid copyright, and (2) copying of constituent elements of the work that are original.").

n.6. See also *ibid.* ("It is hard to see how [the plaintiff] could have disregarded or been indifferent to the danger to [the defendant] unless he was *subjectively conscious* of that danger.") (emphasis added).

Although modern formulations of the standard for punitive damages, such as that contained in the Restatement (Second) of Torts, permit awards of punitive damages based on proof of recklessness, they are irrelevant in ascertaining the standard set by this Court and lower courts in patent infringement cases in the nineteenth and early twentieth century. Cf. *Smith*, 461 U.S. at 57 (Rehnquist, J., joined by Burger, CJ., and Powell, J., dissenting) ("decisions of state courts in the last decade or so are all but irrelevant in determining the intent of the 42d Congress"). For the same reason, the Court's decisions interpreting the statutory term "willful" are irrelevant because that term does not appear in Section 284; rather, the holdings of the pre-1952 decisions govern, and they plainly adopt an actual knowledge standard.[8]

---

[8] The government's reliance on the *Safeco* Court's interpretation of the term "willfully" in Fair Credit Reporting Act to encompass reckless misconduct is misplaced because it too relied on modern sources such as the Restatement (Second) of Torts. See *Safeco Ins. Co. of Am.* v. *Burr*, 551 U.S. 47, 69 (2007). And the *Safeco* Court specifically rejected reliance on the criminal-law definition of "willfulness"—that the defendant "acted with knowledge that his conduct was unlawful" (*id.* at 57 n.9)—but, here, precedent indicates that the criminal-law standard controls (see page 21, *supra*). Application of the criminal standard is therefore proper.

3. Proof that the defendant's actions were objectively reasonable bars enhancement.

This Court has long recognized that an objective reasonableness defense precludes an award of enhanced damages, because it negates actual knowledge. In *Livingston*, for example, the Court recognized that, because the defendants "*might well* have supposed" that they were not infringing upon the plaintiff's patent, "it would be peculiarly harsh and oppressive" to award punitive damages because they were "in no correct sense, wanton infringers." 56 U.S. at 560 (emphasis added).

Likewise, in *Teese* v. *Huntingdon*, 64 U.S. 2, 9 (1859), the Court noted that the defendants resisted the imposition of enhanced damages not by presenting evidence of their subjective intent but by "offer[ing] three depositions, each tending to prove that the plaintiffs were not the original and first inventors of the improvement described in their letters patent"—in other words, by offering an objectively reasonable defense to the charge of infringement.[9]

Lower courts similarly held that enhanced damages were permissible only when the defendant's legal position was objectively unreasonable, and should not be awarded merely because the defendant persisted in a "doubtful" case. See, *e.g.*, *W.S. Godwin Co.* v. *Int'l Steel Tie Co.*, 29 F.2d 476, 478 (6th Cir. 1928) ("a good faith contention that the patent is invalid is inconsistent with wanton infringement");

---

[9] Halo's reliance (Br. 24-25) on *Topliff* v. *Topliff*, 145 U.S. 156, 174 (1892), is misplaced because the district court *declined* to enhance damages at all—and this Court affirmed.

Brown Bag Filling Mach. Co. v. *Drohen*, 175 F. 576, 577 (2d Cir. 1910) ("The defenses * * * presented debatable questions, and it cannot be said that the defendant's course was actuated by malice or bad faith."); *Toledo Computing Scale Co.* v. *Moneyweight Scale Co.*, 178 F. 557, 567 (C.C.N.D. Ill. 1910), aff'd, 187 F. 826 (7th Cir. 1911) ("After the reissue, the validity and novelty were debatable questions; and though the unfair competition was continued, even more unfairly than before, defendant undoubtedly considered the reissue an invalid one."); *Welling* v. *La Bau*, 35 F. 302, 304 (C.C.S.D.N.Y. 1888) (rejecting enhanced damages where "[t]he defendant unquestionably considered himself in the right, and was justified in pressing his views upon the attention of the master and the court"); *Smith* v. *Prior*, 22 F. Cas. 629, 632 (C.C.D. Cal. 1873) (declining to "double or treble these damages in view of the fact that there is reasonable ground of contest between these parties").

As Judge Learned Hand put it, enhanced damages were not available where "the validity of the patent remained open to honest question"; rather, "it must have been apparent" that the patent was valid. *Consol. Rubber Tire Co.* v. *Diamond Rubber Co. of New York*, 226 F. 455, 464 (S.D.N.Y. 1915), aff'd, 232 F. 475 (2d Cir. 1916). See also *Vrooman* v. *Penhollow*, 222 F. 894, 899 (6th Cir. 1915) (reversing trial court's judgment for the defendant on infringement, but barring award of enhanced damages: "Baker cannot well be regarded as intending a willful

injury, when the trial court deemed his conduct rightful.").[10]

This Court reached the same conclusion in the context of the Fair Credit Reporting Act, holding that "evidence of subjective bad faith [cannot] support a willfulness finding * * * when the company's reading of the statute is objectively reasonable." *Safeco,* 551 U.S. at 70 n.20 (2007). Accord *McLaughlin* v. *Richland Shoe Co.*, 486 U.S. 128, 135 n.13 (1988) ("[i]f an

---

[10] In asserting that the early "decisions do not suggest that deliberate or conscious wrongdoing cannot give rise to enhanced damages simply because the infringer or its counsel subsequently develops and presents a plausible (though unsuccessful) defense at trial" (U.S. Br. 24-25), the United States relies on its contention that, even if a patentee cannot show knowing infringement, the patentee may nonetheless recover enhanced damages under a distinct "bad faith" theory. U.S. Br. 25. The government relies on *Aro Manufacturing Co.* v. *Convertible Top Replacement Co.*, 377 U.S. 476 (1964), where the Court stated—without any citation whatsoever—that a plaintiff "could in a case of willful or bad-faith infringement recover punitive or 'increased' damages under the statute's trebling provision." *Id.* at 508. But *Aro* had nothing to do with enhanced damages; the Court merely listed, in the general sense, possible remedies for patent infringement. The use of the word "or" in that context does not, as the government asserts, fundamentally alter the circumstances in which enhanced damages are appropriate. It surely provides no basis for an entirely separate theory of liability not reflected in any prior cases.

Moreover, if enhanced damages could be established via a mechanism *other* than willful infringement, then Section 298 would be largely meaningless—its disallowance of lack-of-opinion-of-counsel evidence could be circumvented if a patentee recasts a "willfulness" argument as one asserting "bad faith."

employer acts reasonably in determining its legal obligation, its action cannot be deemed willful").[11]

That principle also has the important substantive effect of enabling a defendant to defeat an enhanced damages claim pretrial by showing that a defense of non-infringement or patent invalidity was objectively reasonable. An objective reasonableness defense plays a key role in preventing coercive settlements. Indeed, the National Research Council, assessing the pre-*Seagate* standard that turned entirely on the defendant's state of mind, concluded that reforming that standard—to eliminate its "depend[ence] on the assessment of a party's state of mind at the time of the alleged infringement"—would "increase predictability of patent dispute outcomes and reduce the cost of litigation without substantially affecting the underlying principles that these aspects of the enforcement system were meant to promote." *NRC Report* at 117-18.

The United States asserts that the defendant must be aware of the objectively reasonable defense at the time of the alleged infringement. U.S. Br. 29-31. But that turns the notion of *objective* reasonableness on its head: the question is not what the defendant *subjectively* believed, but rather the objective legal conclusions supported by the actual facts,

---

[11] Importantly, there is no shortage of judicial decisions finding defenses objectively unreasonable. See, *e.g.*, *Powell* v. *Home Depot U.S.A., Inc.*, 663 F.3d 1221, 1237 (Fed. Cir. 2011) ("We detect no error in the district court's determination that the objective prong of the willful infringement inquiry was met despite the denial of the preliminary injunction requested by Mr. Powell.").

whether or not known by the defendant. Cf. *Harlow* v. *Fitzgerald*, 457 U.S. 800, 816-817 (1982) (subjective belief irrelevant to objective reasonableness standard for official immunity).

Finally, even if reckless conduct by itself were sufficient to support enhanced damages—and actual knowledge were not required—then proof of objective reasonableness would of course be a defense. A defendant's actions could not qualify as reckless if they were objectively reasonable.

4. *Enhanced damages are limited to highly culpable infringement and may not be awarded for litigation misconduct.*

The United States suggests that enhanced damages are appropriate in the absence of highly culpable infringement, such as where a defendant engages in litigation misconduct. U.S. Br. 20.

The government does not cite a single example of a pre-1952 case in which enhanced damages were awarded in the absence of knowing infringement, and we are not aware of one. That in itself requires rejection of the government's argument.

Moreover, as the United States admits (Br. at 21 n.19), the Patent Act provides a separate mechanism for addressing such abuses—fee-shifting under Section 285. See *Octane Fitness*, 134 S. Ct. at 1756 (attorneys' fees are available in a case "that stands out from others with respect to * * * the unreasonable manner in which the case was litigated"). And attorneys' fees are a more appropriate measure of redressing such wrongdoing than a multiple of the compensatory damages award—which may bear no relation to harm inflicted by litigation misconduct.

The government's argument is especially inappropriate because such misconduct can be committed by *either* a plaintiff or a defendant—but Section 284 enhanced damages are available only from defendants. It would be odd to supply a court with such asymmetrical authority as a means to police litigation misconduct.

5. *An expansive enhanced damages standard cannot be justified on compensation grounds.*

Petitioners and their *amici* contend that reducing the standard is necessary to fully compensate a patentee for infringement. See, *e.g.*, Stryker Br. 30, 42-43; Halo Br. 17; Nokia Br. 8-13. That submission is incorrect for two reasons.

First, this Court has consistently characterized enhanced damages as "punitive." *Florida Prepaid Postsecondary Educ. Expense Bd.* v. *Coll. Sav. Bank*, 527 U.S. 627, 648 (1999). "The power to inflict vindictive or punitive damages" is "not to recompense the plaintiff, but to punish the defendant." *Seymour*, 57 U.S. at 489.

Second, other provisions of the statute ensure that a plaintiff is fully compensated.

Section 284 of the Patent Act entitles the patentee to recover "damages" incurred as a result of infringement: the "pecuniary loss [it] suffered from the infringement, without regard to the question whether the defendant has gained or lost by his unlawful acts." *Coupe* v. *Royer*, 155 U.S. 565, 582 (1895). See also *Aro Mfg. Co.*, 377 U.S. at 507 (plurality opinion) ("[T]he present statutory rule is that only 'damages' may be recovered."). That restores the patentee to

"what his condition would have been if the infringement had not occurred." *Ibid.*

Congress abolished the common-law standard for awarding prejudgment interest and instructed that "prejudgment interest should ordinarily be awarded where necessary to afford plaintiff full compensation for the infringement." *Devex*, 461 U.S. at 654. And it provided for awards of attorneys' fees to prevailing parties in "exceptional" cases. *Octane*, 134 S. Ct. at 1753. Finally, in cases where the infringement is ongoing and where monetary damages are inadequate, Congress authorized patentees to seek injunctive relief. See *eBay, Inc.* v. *MercExchange, L.L.C.*, 547 U.S. 388, 391 (2006). Together, these provisions ensure that patentees will recover "full compensation for 'any damages' [] suffered as a result of the infringement." *Devex*, 461 U.S. at 654-655.[12]

To the extent enhanced damages were needed for limited compensatory purposes more than a century ago (see, *e.g.*, Stryker Br. 30; Nokia Br. 8-13), it was because a patentee's recovery was then limited to a defendant's actual profits, which could result in insufficient compensation to a patentee. See *Birdsall* v. *Coolidge*, 93 U.S. 64, 69 (1876). But subsequent changes to the patent laws have obviated this rationale. Congress has "eliminate[d] the recovery of profits as such" (*Aro*, 377 U.S. at 505) and allows full recovery of damages, which must "in no event be less

---

[12] In *Teese* v. *Huntingdon*, 64 U.S. 2, 9 (1859), the Court suggested that enhanced damages could remedy legal costs, but the later enactment of an express fee-shifting mechanism negates this use of enhanced damages.

than a reasonable royalty for the use made of the invention by the infringer." 35 U.S.C. § 284.

There simply is no basis for expanding Section 284 enhanced damages on the theory that they are needed to provide full compensation to injured patentees.

C. Close Judicial Supervision Of Enhanced Patent Damages Is Essential To Prevent Abuse.

The potential magnitude of enhanced damages awards requires careful judicial supervision of the relevant determinations in two principal respects. The Court should reaffirm Section 284's express assignment to judges, not juries, of the determination whether multiple damages are appropriate as well as the decision regarding the amount of the multiplier. And the decision to enhance damages in a particular case should be subject to *de novo* review on appeal.

1. The judge, not jury, determines willfulness.

The Patent Act expressly vests the district court with authority to award enhanced damages, providing that "*the court* may increase the damages up to three times the amount found or assessed." 35 U.S.C. § 284 (emphasis added); compare *ibid.* (a court may award compensatory damages to a patentee only "[w]hen the damages are not found by a jury").

This Court recognized long ago that "the Patent Act of 1836 confines the jury to the assessment of 'actual damages.' The power to inflict vindictive or punitive damages is committed to the discretion and judgment of the court." *Seymour*, 57 U.S. at 489. See also *Day* v. *Woodworth*, 54 U.S. 363, 372 (1851) ("The

only instance where this power of increasing the 'actual damages' is given by statute is in the patent laws of the United States. But there it is given to the court and not to the jury.").

The Federal Circuit nonetheless holds that the subjective element of the enhanced damages inquiry must be put to the jury. See, *e.g.*, *Bard Peripheral Vascular* v. *W.L. Gore & Assocs.*, 682 F.3d 1003 (Fed. Cir. 2012); *Powell* v. *Home Depot*, 663 F.3d at 1236 ("the question of willfulness" is for the "jury"). But the Federal Circuit has never explained how these rulings can be squared with the statutory language and this Court's precedents.[13]

To be sure, willfulness determinations often involve disputed questions of fact. But it is hardly surprising that, in some aspects of patent litigation, a judge, rather than the jury, will resolve certain factual disputes. That was the very premise of the Court's recent decision in *Teva Pharmaceuticals USA, Inc.* v. *Sandoz, Inc.*, 135 S. Ct. 831 (2015), which addressed a district court's resolution of disputed factual questions in the context of claim construction.

---

[13] Section 284's allocation of the enhancement determination to the court does not run afoul of the Seventh Amendment. Because there is no history of judges deciding questions relating to enhanced patent damages (see John B. Pegram, *The Willful Patent Infringement Dilemma and the 7th Amendment*, 86 J. Pat. & Trademark Off. Soc'y 271, 280 (2004)), the willfulness inquiry need not "fall to the jury in order to preserve the substance of the common-law right as it existed in 1791." *Markman* v. *Westview Instruments, Inc.*, 517 U.S. 370, 376 (1996).

2. A district court's decision to award enhanced damages should be reviewed de novo.

Careful judicial scrutiny is also necessary at the appellate stage. A district court's ultimate legal conclusion regarding enhancement—whether enhancement is warranted in light of the particular factual record—is a question of law subject to *de novo* review. Cf. *Teva Pharm.*, 135 S. Ct. at 838 ("the ultimate issue of the proper construction of a claim should be treated as a question of law"); *id.* at 839 ("the Federal Circuit will continue to review *de novo* the district court's ultimate interpretation of the patent claims").[14]

Contrary to the assertion by the United States (U.S. Br. 33-34), this Court's decision in *Highmark Inc.* v. *Allcare Health Management System, Inc.*, 134 S. Ct. 1744 (2014), does not support an abuse of discretion standard. The United States contends that there is a textual commitment of this authority to the district court (*id.* at 33)—but Section 284, unlike Section 285, does not cast the circumstances in which enhanced damages are warranted as "exceptional" or any other term that connotes such a broad grant of discretion.

The United States also points (*ibid.*) to *Highmark*'s recognition that a judge experiences a case

---

[14] To be sure, as was the case in *Teva*, Federal Rule of Civil Procedure 52(a)(6) likely establishes a "clear error" standard for *factual* determinations underlying a decision to award enhanced damages. *Teva Pharm.*, 135 S. Ct. at 835. But the *ultimate* question of whether enhancement is warranted in a particular case is a legal question—like the ultimate question of claim construction—and is therefore subject to *de novo* review.

"over a prolonged period of time." But the enhanced damages question focuses on the conduct of the party with respect to infringement, not conduct in the litigation. The award of enhanced damages is not, as is the case with attorneys' fees, an aspect of "supervision of litigation." *Pierce* v. *Underwood*, 487 U.S. 552, 559 n.1 (1988).

Rather, the question with respect to enhanced damages turns upon an assessment of subjective misconduct and objective reasonableness. See pages 22-30, *supra*. It therefore implicates the application of fact to law that is traditionally subject to *de novo* review. See *Lilly* v. *Virginia*, 527 U.S. 116, 148 (1999) (Rehnquist, C.J., concurring). And *de novo* review is critical to "unify precedent" (*Ornelas* v. *United States*, 517 U.S. 690, 697 (1996)) and to establish "doctrinal coherence" (*Salve Regina Coll.* v. *Russell*, 499 U.S. 225, 231 (1991)), so that parties can have some degree of clarity as to the circumstances in which enhanced damages are appropriate.

Moreover, the magnitude of an award of enhanced damages is in virtually every case dramatically greater than the amount of Section 285 attorneys' fees. *Bard Peripheral Vascular* is a clear example: after the jury awarded more than $185 million in compensatory damages, the district court *doubled* that amount as enhanced damages. *Bard Peripheral Vascular, Inc.* v. *W.L. Gore & Assoc.*, 670 F.3d 1171, 1191 (Fed. Cir. 2012). These "substantial consequences" lead one to "expect" enhancement decisions "to be reviewed more intensively" on appeal. *Pierce*, 487 U.S. at 563.

The punitive nature of enhanced damages also weighs in favor of *de novo* review. Because punitive

damages are, at bottom, "quasi-criminal," this Court has held that they should be reviewed "*de novo*" in assessing compliance with constitutional limits. *Cooper Indus., Inc.* v. *Leatherman Tool Grp., Inc.*, 532 U.S. 424, 432-36 (2001). For the same reasons, a court's determination whether the factual circumstances of a particular case warrant enhanced damages should be reviewed *de novo*.

CONCLUSION

The judgments of the court of appeals should be affirmed.

Respectfully submitted.

ANDREW J. PINCUS
Counsel of Record
PAUL W. HUGHES
Mayer Brown LLP
1999 K Street, NW
Washington, DC 20006
(202) 263-3000
apincus@mayerbrown.com

Counsel for Amicus Curiae

JANUARY 2016

Nos. 14-1513, 14-1520

In the Supreme Court of the United States

HALO ELECTRONICS, INC., *Petitioner*,

v.

PULSE ELECTRONICS, INC., *et al.*, *Respondents*.

STRYKER CORPORATION, *et al.*, *Petitioners*,

v.

ZIMMER, INC., *et al.*, *Respondents*.

On Writs of Certiorari to the United States Court of Appeals for the Federal Circuit

BRIEF OF CERTAIN MEMBERS OF CONGRESS AS *AMICI CURIAE* IN SUPPORT OF RESPONDENTS

JOEL D. SAYRES
M. RYAN CLOUGH
FAEGRE BAKER DANIELS LLP
3200 Wells Fargo Center
1700 Lincoln Street
Denver, CO 80203
(303) 607-3500

AARON D. VAN OORT
FAEGRE BAKER DANIELS LLP
2200 Wells Fargo Center
90 S. Seventh Street
Minneapolis, MN 55402
(612) 766-7000

DANIEL M. LECHLEITER
Counsel of Record
BRIAN J. PAUL
FAEGRE BAKER DANIELS LLP
300 N. Meridian St.
Ste. 2700
Indianapolis, IN 46204
(317) 237-0300
DML@FaegreBD.com

Counsel for Amici Curiae *Members of Congress*

Becker Gallagher Cincinnati, OH Washington, D.C. 800.890.5001

TABLE OF CONTENTS

TABLE OF AUTHORITIES ii

INTEREST OF *AMICI CURIAE* 1

SUMMARY OF THE ARGUMENT . 6

ARGUMENT 6

I. IN PASSING THE AIA, CONGRESS UNDERSTOOD THE *SEAGATE* STANDARD WOULD CONTINUE TO GOVERN THE ASSESSMENT OF ENHANCED DAMAGES UNDER 35 U.S.C. § 284. 6

A. The Legislative History of Congress's Patent-Law Reform Efforts Confirms that Congress Was Well Aware of *Seagate*. . . . 8

B. Congress Did Not Amend Section 284's Enhancement Provision in the AIA Knowing that *Seagate* Would Remain in Place. 12

CONCLUSION 18

APPENDIX

Appendix *Amici Curiae* Members of Congress . . . . App. 1

TABLE OF AUTHORITIES

CASES

Garcia v. United States,
469 U.S. 70 (1984) 17

In re Seagate Technology, LLC,
497 F.3d 1360 (Fed. Cir. 2007) . . . . . *passim*

Underwater Devices Inc. v. Morrison-Knudsen Co.,
717 F.2d 1380 (Fed. Cir. 1983) 7

STATUTES AND LEGISLATIVE MATERIAL

35 U.S.C. § 284 . . . . . *passim*

America Invents Act, H.R. 1249, 112th Cong. (2011); Leahy-Smith America Invents Act, Pub. L. No. 112-29, 125 Stat. 284 (2011) . . . *passim*

House Committee Report on H.R. 1908 9

House Judiciary Report on H.R. 1249, H.R. REP. NO. 112-98 (2011) 17

H.R. REP. NO. 110-314 (2007) 8, 9

H.R. REP. NO. 112-98 17

Patent Reform Act of 2005, H.R. 2795, 109th Cong. (2005) 3, 8

Patent Reform Act of 2006, S. 3818, 109th Cong. (2006) 2, 8

Patent Reform Act of 2007, H.R. 1908, 110th Cong. (2007) 3, 8

Patent Reform Act of 2007, S. 1145, 110th Cong. (2007) 2, 8

Patent Reform Act of 2008, S. 3600, 110th Cong. (2008) 10

Patent Reform Act of 2009, H.R. 1260, 111th Cong. (2009) 3, 10

Patent Reform Act of 2009, S. 515, 111th Cong. (2009) 2, 10, 11, 12

Patent Reform Act of 2011, S. 23, 112th Cong. (2011) 2, 10, 12, 16

Pub. L. No. 112-29, 125 Stat. 284 (2011) 7, 17

Senate Committee Report on S. 1145 . . . . . 9, 10

Senate Judiciary Committee's May 12, 2009, Report on an amended version of S. 515 11

S. REP. NO. 111-18 (2009) 10, 11

S. REP. NO. 110-259 (2008) 9

RULES

Sup. Ct. R. 37.3(a) 1

Sup. Ct. R. 37.6 1

OTHER AUTHORITIES

America Invents Act: Hearing on H.R. 1249 Before the Subcomm. on Intellectual Prop., Competition, and the Internet of the H. Comm. on the Judiciary, 112th Cong. 2 (2011) 16

COMMITTEE ON INTELLECTUAL PROPERTY RIGHTS IN THE KNOWLEDGE-BASED ECONOMY, BOARD ON SCIENCE, TECHNOLOGY, AND ECONOMIC POLICY, POLICY AND GLOBAL AFFAIRS DIVISION, NATIONAL RESEARCH COUNCIL OF THE NATIONAL ACADEMIES, A PATENT SYSTEM FOR THE 21ST CENTURY, 83 (Stephen A. Merrill, Richard C. Levin & Mark B. Myers, eds., 2004) . . 8

Crossing the Finish Line on Patent Reform: What Can and Should Be Done: Hearing Before the Subcomm. on Intellectual Prop., Competition, and the Internet of the H. Comm. on the Judiciary, 112th Cong. (2011) 13, 14, 15

Markup of H.R. 1249, the America Invents Act: Hearing Before the H. Comm. on the Judiciary, 112th Cong. 9 (2011), http://www uspto.gov/sites/default/files/aia_implementation/20110414-house_judiciary_mark-up_transcript.pdf 16, 17

Patent Reform in the 111th Congress: Legislation and Recent Court Decisions: Hearing Before the S. Comm. on the Judiciary, 111th Cong. 12 (2009) 10, 11

Review of Recent Judicial Decisions on Patent Law: Hearing Before the Subcomm. on Intellectual Prop., Competition, and the Internet of the H. Comm. on the Judiciary, 112th Cong. (2011) . 13, 14, 15

INTEREST OF *AMICI CURIAE*[1]

Amici are a bipartisan, bicameral group of six current United States Senators and Members of the United States House of Representatives who were instrumental in Congress's efforts to reform the patent laws between 2005 and 2011 and, in particular, in the development, drafting, and passage of the Leahy-Smith America Invents Act, Pub. L. No. 112-29, 125 Stat. 284 (2011) (the "AIA").[2]

Amici have a strong interest in ensuring that this Court has accurate information regarding Congress's objective and intent in enacting the AIA. In particular, in considering whether to amend the enhanced-damages provision of 35 U.S.C. § 284 at issue in this case, Congress was fully aware of the willful-infringement standard that the U.S. Court of Appeals for the Federal Circuit established in *In re Seagate Technology, LLC*, 497 F.3d 1360 (Fed. Cir. 2007) (en banc). Although it considered numerous proposed amendments over a six-year period, Congress ultimately did not alter the enhancement provision of

---

[1] Pursuant to Supreme Court Rule 37.3(a), the *Stryker* parties have consented to the filing of this brief, and the *Halo* parties have granted blanket consent for all briefs. Pursuant to Rule 37.6, no counsel for a party authored this brief in whole or in part, and neither such counsel nor any party made a monetary contribution intended to fund the preparation or submission of the brief. No person or entity, other than *amici* and their counsel, made a monetary contribution to fund the preparation or submission of this brief.

[2] A complete list of *amici* Members of Congress is attached hereto in the Appendix.

Section 284, knowing that it was leaving *Seagate* in place.

SENATOR PATRICK J. LEAHY has been a Democratic Senator since 1975 and is currently the Ranking Member of the Senate Judiciary Committee after having served as its Chairman from June 2001 through January 2003, and again from January 2007 until January 2015. Senator Leahy has been a leading advocate for protecting intellectual property and promoting innovation in the United States. He was instrumental in Congress's patent-law reform efforts leading up to its passage of the AIA, which bears his name, along with his cosponsor, Representative Lamar Smith. Senator Leahy was involved in introducing to the Senate several pre-AIA bills aimed at comprehensively reforming the patent laws. He joined Senator Hatch in introducing the Patent Reform Act of 2006, S. 3818, 109th Cong. (2006). Subsequently, as Chairman of the Senate Judiciary Committee, Senator Leahy introduced the Patent Reform Act of 2007, S. 1145, 110th Cong. (2007), the Patent Reform Act of 2009, S. 515, 111th Cong. (2009), and the Patent Reform Act of 2011, S. 23, 112th Cong. (2011).

SENATOR ORRIN G. HATCH has been a Republican Senator since 1977. Senator Hatch is currently the Chairman of the Senate Finance Committee and a member of the Senate Judiciary Committee, on which he served twice as Chairman, and variously as the Ranking Member, between 1993 and 2005. Senator Hatch was highly active in Congress's patent-law reform efforts leading up to its passage of the AIA, introducing one of the first pre-AIA bills aimed at comprehensively reforming the patent laws, the Patent

Reform Act of 2006, S. 3818, 109th Cong. (2006). Moreover, Senator Hatch joined Senator Leahy in introducing the Patent Reform Act of 2007, S. 1145, 110th Cong. (2007), the Patent Reform Act of 2009, S. 515, 111th Cong. (2009), and the Patent Reform Act of 2011, S. 23, 112th Cong. (2011).

REPRESENTATIVE LAMAR S. SMITH has been a Republican Member of the House of Representatives since 1987. Representative Smith is currently the Chairman of the House Science, Space, and Technology Committee and a member of the House Judiciary Committee, on which he served as Chairman from January 2011 through January 2013, when the AIA was passed and the House Judiciary issued its report on the bill. Representative Smith was instrumental in Congress's patent-law reform efforts leading up to its passage of the AIA, which bears his name along with his cosponsor, Senator Patrick Leahy. As Chairman of the House Judiciary Committee's Subcommittee on Courts, the Internet, and Intellectual Property, he introduced the first pre-AIA bill aimed at comprehensively reforming the patent laws, the Patent Reform Act of 2005, H.R. 2795, 109th Cong. (2005). Representative Smith later joined in the introduction of both the Patent Reform Act of 2007, H.R. 1908, 110th Cong. (2007), and the Patent Reform Act of 2009, H.R. 1260, 111th Cong. (2009). Subsequently, while Chairman of the House Judiciary Committee, Representative Smith introduced the bill that ultimately became the AIA, the America Invents Act, H.R. 1249, 112th Cong. (2011).

REPRESENTATIVE ROBERT W. GOODLATTE has been a Republican Member of the House of Representatives since 1993. Representative Goodlatte currently serves as Chairman of the House Judiciary Committee. As Chairman of that Committee's Subcommittee on Intellectual Property, Competition, and the Internet from January 2011 through January 2013, Representative Goodlatte was highly active in Congress's patent-law reform efforts leading up to its passage of the AIA, including holding Subcommittee hearings in 2011 that addressed *Seagate* and the willful-infringement standard. Representative Goodlatte joined in the introduction of multiple pre-AIA bills aimed at comprehensively reforming the patent laws, including H.R. 2795, introduced by Representative Lamar Smith; H.R. 1908, introduced by Representative Howard Berman; and H.R. 1260, introduced by Representative John Conyers. Representative Goodlatte also joined Representative Smith in introducing H.R. 1249, which ultimately became the AIA.

REPRESENTATIVE STEVEN J. CHABOT has been a Republican Member of the House of Representatives for 19 years, serving in that role from 1995 through 2008 and again from 2011 to the present. Representative Chabot serves on the House Judiciary Committee, as well as its Subcommittee on Courts, Intellectual Property, and the Internet, having also served on both during the patent-reform debates that preceded the AIA. Representative Chabot also currently serves as Chairman of the House Committee on Small Business. Representative Chabot testified on the House floor with respect to the Patent Reform Act of 2007, H.R. 1908, 110th Cong. (2007), as well as the

bill that ultimately became the AIA, the America Invents Act, H.R. 1249, 112th Cong. (2011).

SENATOR MICHAEL F. BENNET has been a Democratic Senator since 2009. Senator Bennet is currently a member of the Senate Finance Committee, as well as the Senate Committees on Agriculture, Nutrition and Forestry, and Health, Education, Labor, and Pensions. During the debates in early 2011 on S. 23, the Senate bill that immediately preceded the AIA, Senator Bennet contributed to a manager's amendment, No. 121, to the bill and provided testimony on the Senate floor in support of the amended bill. Subsequently, Senator Bennet testified in support of the Senate's passage of the AIA in September 2011.

SUMMARY OF THE ARGUMENT

In 2011, when Congress enacted the Leahy-Smith America Invents Act, or "AIA," the Federal Circuit's standard for willful infringement under *In re Seagate Technology, LLC*, 497 F.3d 1360 (Fed. Cir. 2007) (en banc), was the established judicial interpretation of 35 U.S.C. § 284 with respect to awarding enhanced damages in a patent case. The legislative history of Section 284 in the period following *Seagate* shows that Congress was well aware of the *Seagate* standard and explored *Seagate*'s impact on the issue of enhanced damages. Ultimately, Congress did not substantively amend Section 284, knowing that the *Seagate* standard would remain in place and continue to govern the enhancement analysis under Section 284.

ARGUMENT

I. IN PASSING THE AIA, CONGRESS UNDERSTOOD THE *SEAGATE* STANDARD WOULD CONTINUE TO GOVERN THE ASSESSMENT OF ENHANCED DAMAGES UNDER 35 U.S.C. § 284.

Section 284 permits a court to increase damages in a patent case "up to three times the amount found or assessed." 35 U.S.C. § 284. The Federal Circuit has long held that, "[a]bsent a statutory guide[,] . . . an award of enhanced damages [under Section 284] requires a showing of willful infringement." *In re Seagate Tech., LLC*, 497 F.3d 1360, 1368 (Fed. Cir. 2007) (en banc).

On August 20, 2007, the en banc Federal Circuit in *Seagate* changed the standard for finding willful infringement. The court's previous willfulness

standard, established in *Underwater Devices Inc. v. Morrison-Knudsen Co.*, 717 F.2d 1380 (Fed. Cir. 1983), "set[] a low[] threshold for willful infringement that [was] more akin to negligence," *Seagate*, 497 F.3d at 1371, and had created a variety of unintended consequences, *see id.* at 1368–70. Therefore, the court overruled *Underwater Devices* and reset its willfulness standard, holding that "proof of willful infringement permitting enhanced damages [under Section 284] requires at least a [two-part] showing of objective recklessness." *Id.* at 1371. First, "a patentee must show by clear and convincing evidence that the infringer acted despite an objectively high likelihood that its actions constituted infringement of a valid patent." *Id.* Second, if the "threshold objective standard is satisfied, the patentee must also demonstrate that this objectively-defined risk . was either known or so obvious that it should have been known to the accused infringer." *Id.*

Seagate came in the midst of Congress's long-running efforts to reform the patent laws. Those efforts culminated in the enactment of the Leahy-Smith America Invents Act, or "AIA," which was signed into law on September 16, 2011. Pub. L. No. 112-29, 125 Stat. 284. Both before and after the *Seagate* decision, between 2005 and 2011, Congress considered a variety of proposed amendments to Section 284 but, in full view of the Federal Circuit's interpretation of Section 284 in *Seagate*, ultimately adopted none of them. In declining to amend Section 284's enhancement provision, Congress understood that *Seagate* would remain in place and continue to govern the enhancement analysis under Section 284.

A. The Legislative History of Congress's Patent-Law Reform Efforts Confirms that Congress Was Well Aware of *Seagate*.

Before *Seagate*, there was considerable dissatisfaction with the state of the law on willful infringement and enhanced damages under Section 284. Many believed that this law was in dire need of legislative attention. *See, e.g.*, COMMITTEE ON INTELLECTUAL PROPERTY RIGHTS IN THE KNOWLEDGE-BASED ECONOMY, BOARD ON SCIENCE, TECHNOLOGY, AND ECONOMIC POLICY, POLICY AND GLOBAL AFFAIRS DIVISION, NATIONAL RESEARCH COUNCIL OF THE NATIONAL ACADEMIES, A PATENT SYSTEM FOR THE 21ST CENTURY, 83, 118–20 (Stephen A. Merrill, Richard C. Levin & Mark B. Myers, eds., 2004) ("The legal doctrine subjecting 'willful' infringers to enhanced damages should be modified or eliminated."); H.R. REP. NO. 110-314, at 28 (2007) (noting, shortly before *Seagate* came down, that "there is substantial question as to whether the current standards used by the court[s] to determine willfulness are appropriate").

In keeping with that view, numerous pre-*Seagate* bills introduced in both houses of Congress proposed amendments to Section 284 that would have expressly made willful infringement the standard for awarding enhanced damages but provided specific circumstances under which a court could (and could not) find willfulness. *See* Patent Reform Act of 2005, H.R. 2795, 109th Cong. § 6(2) (2005); Patent Reform Act of 2006, S. 3818, 109th Cong. § 5(a)(2) (2006); Patent Reform Act of 2007, H.R. 1908, 110th Cong. § 5(a)(2) (2007); Patent Reform Act of 2007, S. 1145, 110th Cong. § 5(a)(2) (2007).

The legislative history shows that Congress knew about *Seagate* almost immediately after it was decided. A House Committee Report on H.R. 1908, dated September 4, 2007, just over two weeks after *Seagate* came down, notes that "[j]ust before this Committee Report went to print, the Court of Appeals for the Federal Circuit amended its rule for finding willful patent infringement." H.R. REP. NO. 110-314, at 28 n.20 (citing *Seagate*, 497 F.3d 1360). A January 24, 2008, Senate Committee Report on S. 1145, which was introduced contemporaneously with H.R. 1908, similarly noted the Federal Circuit's then-recent decision in *Seagate*, stating that "[a]fter this bill emerged from Committee, the Federal Circuit raised the standard for willful infringement." S. REP. NO. 110-259, at 16 n.66 (2008) (citing *Seagate*, 497 F.3d 1360).

The Senate Committee Report also included pertinent Minority Views by Senators Coburn, Grassley, Kyl, and Brownback. *Id.* at 74–77. These Senators urged Congress to take time to scrutinize the then-recent decisions of this Court and the Federal Circuit before making legislative changes to the patent laws. They noted that "since the inception of the legislative reform effort, the patent playing field has been dramatically altered" by several "significant Supreme Court and Federal Circuit decisions on patent rights and remedies," including *Seagate*, which "heightened the standard for proving willful infringement." *Id.* at 75–76. Since the courts were already working to "rectify perceived imbalances in the patent system," these Senators believed that Congress should proceed with caution, "tak[ing] the necessary time to further scrutinize and assess the combined

impact of these key patent decisions before moving forward with particular reforms that may no longer be needed and will likely do more harm than good." *Id.* at 76.

Following *Seagate*, Congress continued to consider the issue of enhanced damages. One new bill made no changes to Section 284's enhancement provision. *See* Patent Reform Act of 2008, S. 3600, 110th Cong. § 4 (2008). Other bills proposed amending Section 284 to incorporate portions of the *Seagate* willfulness standard. *See* Patent Reform Act of 2009, H.R. 1260, 111th Cong. § 5(a) (2009); Patent Reform Act of 2009, S. 515, 111th Cong. § 4(a) (2009); Patent Reform Act of 2011, S. 23, 112th Cong. § 4(a)(4) (2011) (as introduced on Jan. 25, 2011); *see also* S. REP. NO. 111-18, at 10 (2009).

Congress also continued to consider *Seagate*'s impact on its legislative efforts. During a March 10, 2009, Senate Judiciary Committee hearing on S. 515, Herbert Wamsley, the Executive Director of the Intellectual Property Owners Association ("IPO"), testified that the IPO "supported the reform of the law of willful infringement and treble damages," but that the proposed reforms "need[] to be reviewed in light of the court's decision in the Seagate case." *Patent Reform in the 111th Congress: Legislation and Recent Court Decisions: Hearing Before the S. Comm. on the Judiciary*, 111th Cong. 12 (2009). Mark Lemley of Stanford Law School testified that "[s]ince Congress began debating patent reform 4 years ago, the courts have acted to fix a number of problems that were the focus of initial congressional reform . [I]n the Seagate case, the [Federal Circuit] effectively solved

the problem of abuse and overuse of willfulness." *Id.* at 13.

The Senate Judiciary Committee's May 12, 2009, Report on an amended version of S. 515 stated that recent decisions of this Court "have moved in the direction of improving patent quality and making the determination of patent validity more efficient." S. REP. NO. 111-18, at 2–3. The Report continued: "The decisions reflect a growing sense that questionable patents are too easily obtained and are too difficult to challenge. Recent decisions by the Federal Circuit reflect a similar trend in response to these concerns." *Id.* at 3 (footnotes omitted). The Report specifically cited *Seagate* as an example of one of these "[r]ecent decisions by the Federal Circuit." *Id.* at 3 & n.9. The Committee noted that, in "a positive development," *Seagate* had "addressed the problem created by the lack of statutory guidance as to when enhanced damages are authorized." *Id.* at 12.

Senators Kyl, Feingold, and Coburn provided Minority Views in the Committee Report. *See id.* at 53–61. In criticizing portions of S. 515's willfulness provisions, they noted the provisions "[a]ppear to substantially unravel the progress made by the Seagate decision" and did not "fully assimilate the teachings of Seagate." *Id.* at 60. Among other concerns, they argued that "[t]he bill's willfulness provisions" constituted "a step backward for accused infringers, returning us to the pre-Seagate world of inquiries into the infringer's subjective intent and the cottage industry of opinion counsel." *Id.*

B. Congress Did Not Amend Section 284's Enhancement Provision in the AIA Knowing that *Seagate* Would Remain in Place.

The 111th Congress concluded without taking further action on S. 515, but near the beginning of the 112th Congress, Senator Leahy introduced the Patent Reform Act of 2011, S. 23. Like several prior bills, S. 23 made willful infringement an express requirement for awarding enhanced damages. *See* S. 23 § 4(a)(4) (as introduced, Jan. 25, 2011). But S. 23 provided a different willfulness standard than prior bills. *See id.* Among other things, S. 23 moved out of Section 284, and into a new, separate Section 298, a provision included in prior bills, such as S. 515, that would have precluded a patent holder from using an accused infringer's failure to obtain the advice of counsel to prove willfulness. *See* S. 23 § 4(d) (as introduced, Jan. 25, 2011).

Just days later, the Senate Judiciary Committee marked up and approved S. 23 with amendments that, among other things, entirely removed the bill's willfulness standard, *see* S. 23, 112th Cong. § 4(a)(3) (as reported by S. Comm. on the Judiciary, Feb. 3, 2011), but maintained the separate section establishing Section 298, *id.* § 4(d). The Senate subsequently passed S. 23 as amended and reported by the Senate Judiciary Committee. *See* AIA, S. 23, 112th Cong. (as passed by Senate, Mar. 8, 2011) (containing no mention of or substantive amendment to Section 284).

A few weeks later, on March 30, 2011, Representative Lamar Smith, then-Chairman of the House Judiciary Committee, introduced a House

version of the AIA, H.R. 1249, 112th Cong. (2011). Just like the version of S. 23 that the Senate had passed on March 8, 2011, H.R. 1249 contained no substantive amendments to Section 284, but included the new provision, Section 298, that precluded a patent holder from using an accused infringer's failure to obtain the advice of counsel to prove willfulness. *See* H.R. 1249 § 16.

Leading up to the introduction of H.R. 1249, the House Judiciary Committee's Subcommittee on Intellectual Property, Competition, and the Internet held two hearings on patent reform, one on February 11, 2011, and the second on March 10, 2011. *See Crossing the Finish Line on Patent Reform: What Can and Should Be Done: Hearing Before the Subcomm. on Intellectual Prop., Competition, and the Internet of the H. Comm. on the Judiciary*, 112th Cong. (2011) [hereinafter *February Hearing*]; *Review of Recent Judicial Decisions on Patent Law: Hearing Before the Subcomm. on Intellectual Prop., Competition, and the Internet of the H. Comm. on the Judiciary*, 112th Cong. (2011) [hereinafter *March Hearing*].

At the *February Hearing*, Representative Goodlatte, then-Chairman of the Subcommittee, cautioned that

> [s]ince we began debating comprehensive patent reform over a half decade ago, the Federal courts have issued numerous opinions that have touched on some of the very reforms we have been working on, including . willfulness We need to assess those decisions carefully and factor them into any legislation we move.

Id. at 1–2. Other witnesses testified that, in light of *Seagate*, in which "the Federal Circuit . . . clarified the standard of willful infringement to require proof of objective recklessness by the infringer before trouble [sic] damages may be awarded," there was simply no need to legislatively address willfulness. *Id.* at 18 (statement of Carl Horton, Chief Intellectual Property Counsel, General Electric); *see id.* at 11–12 (statement of David Simon, Associate General Counsel, Intellectual Property Policy, Intel Corporation); *id.* at 40 (statement of J. Paul R. Michel (Ret.), former Chief Judge, United States Court of Appeals for the Federal Circuit).

At the *March Hearing*, Representative Goodlatte reiterated his views expressed at the *February Hearing*:

> My belief is that Congress can learn from what the courts are doing and if the courts sufficiently have addressed an area of patent reform, then that may obviate the need for the Congress to act. In fact, one reason we are making greater progress on patent reform is because some of the more controversial issues that engendered the most disagreements are no longer addressed in the Senate bill. That is because the Supreme Court and the Federal Circuit have handed down decisions addressing many of the contentious issues we have grappled with over the years.

March Hearing 2. Representative Conyers shared a similar view, stating that "the courts have helped us, as you have said, Chairman Goodlatte, in ferreting out

a lot of issues that seems to me that we can take mostly off the table," including "willfulness." *Id.* at 3.

Other witnesses further echoed the testimony at the *February Hearing*, testifying that the *Seagate* decision had obviated the need for Congress to address willfulness. *See March Hearing* 14–15 (stating that the "Federal Circuit [had] been quite active in clarifying previously uncertain or unjustified legal principles," and opinions of this Court and the Federal Circuit had already "addressed, and largely cured, [several] imbalances in the law" for which the Subcommittee had previously considered legislation, including by overturning the "low standard for proof of willfulness" (statement of Andrew Pincus, Partner, Mayer Brown LLP)); *id.* at 31–32 (stating that the court decisions during the patent reform debates "have related directly to the [legislative] proposals" being considered by Congress, and nearly "all of the decisions on these particular issues have gone the way that the legislation was headed," including by "the courts limit[ing] the scope" of "enhanced damages for willful infringement" (statement of Dennis Crouch, Associate Professor of Law, University of Missouri School of Law)); *cf. id.* at 47–48 ("There was a principle, you get multiple damages for willful conduct, but somehow a series of decision[s] had turned willfulness into negligence. And so [in *Seagate*] the Federal Circuit said, you know what, we are going to go back to what this really means." (statement of Mr. Pincus)).

In the hearing that accompanied the introduction of H.R. 1249, on March 30, 2011, Representative Goodlatte stated that H.R. 1249 was "the culmination of years of work in both the House and Senate over

four Congresses," including, among other things, "watch[ing] judicial decisions in the courts." *America Invents Act: Hearing on H.R. 1249 Before the Subcomm. on Intellectual Prop., Competition, and the Internet of the H. Comm. on the Judiciary*, 112th Cong. 2 (2011). Once again, various witnesses testified that there was simply no need to legislate on issues that the courts had, by then, already addressed, including willfulness. *Id.* at 78 (discussing "issues that are clearly no longer necessary because of Federal Circuit decisions" and stating that "willful infringement . . . was effectively addressed by the *en banc* decision of the Federal Circuit in *In re Seagate* [and] was stricken from S. 23 before Senate passage" (testimony of Steven W. Miller, Vice President and General Counsel for Intellectual Property, Procter & Gamble Company)); *see id.* at 45 ("In light of recent court decisions relating to . . . willfulness, . we support removal of related provisions in patent reform legislation." (testimony of Hon. David J. Kappos, Under Secretary of Commerce for Intellectual Property and Director, United States Patent and Trademark Office)).

On April 14, 2011, the House Judiciary Committee marked up and passed H.R. 1249, with no substantive changes to Section 284 but inclusive of new Section 298, which provided that failure to obtain advice of counsel could not be used as proof of willfulness. During the mark-up session, the Committee Chairman, Representative Lamar Smith, noted that "the bill doesn't address many litigation reform issues because the courts are addressing these issues through decisions on damages, venue, and other subjects." *Markup of H.R. 1249, the America Invents Act: Hearing Before the H. Comm. on the Judiciary*, 112th Cong. 9

(2011), http://www uspto.gov/sites/default/files/aia_implementation/20110414-house_judiciary_mark-up_transcript.pdf.

The House Judiciary Report on H.R. 1249, H.R. REP. NO. 112-98, at 38–40 (2011), which the Judiciary Committee issued under the Chairmanship of Representative Lamar Smith, sets forth a statement of the House's purpose and intent in implementing the AIA. *See Garcia v. United States*, 469 U.S. 70, 76 (1984). The Report acknowledges that throughout Congress's patent reform debates, this Court and the Federal Circuit issued decisions addressing several significant concerns with the patent system. H.R. REP. NO. 112-98, at 39. Indeed, the Report cites *Seagate* as the sole example of a "[r]ecent decision[] by the Federal Circuit" that had responded to those concerns. *Id.* at 39 & n.9.

On June 1, 2011, the Committee reported the bill to the House. H.R. 1249, 112th Cong. (as reported by H. Comm. on the Judiciary, June 1, 2011); H.R. REP. NO. 112-98. On June 23, 2011, for purposes of the provisions relevant to this case, the House passed H.R. 1249 in the form in which it had been reported by the House Judiciary Committee. H.R. 1249, 112th Cong. (as passed by House, June 23, 2011). Less than three months later, the Senate likewise passed the bill. H.R. 1249, 112th Cong. (as passed by Senate, Sept. 8, 2011). Finally, President Obama signed the AIA into law on September 16, 2011.[3]

---

[3] The enacted version of the AIA includes a minor, technical amendment to Section 284 unrelated to enhanced damages. *See* Pub. L. No. 112-29, § 20(j)(1), 125 Stat. 335 (2011).

CONCLUSION

The legislative history of the AIA demonstrates that in considering whether to amend the enhancement provision of Section 284, Congress was fully aware of the *Seagate* standard. That history also demonstrates that, despite considering numerous proposed amendments over a six-year period, Congress ultimately did not alter the enhancement provision of Section 284, knowing that it was leaving *Seagate* in place.

Respectfully submitted,

DANIEL M. LECHLEITER
Counsel of Record
BRIAN J. PAUL
FAEGRE BAKER DANIELS LLP
300 N. Meridian St., Ste. 2700
Indianapolis, IN 46204
(317) 237-0300
DML@FaegreBD.com

JOEL D. SAYRES
M. RYAN CLOUGH
FAEGRE BAKER DANIELS LLP
3200 Wells Fargo Center
1700 Lincoln Street
Denver, CO 80203
(303) 607-3500

AARON D. VAN OORT
FAEGRE BAKER DANIELS LLP
2200 Wells Fargo Center
90 S. Seventh Street
Minneapolis, MN 55402
(612) 766-7000

Counsel for Amici Curiae
Members of Congress

JANUARY 20, 2016

APPENDIX

APPENDIX

TABLE OF CONTENTS

Appendix *Amici Curiae* Members of Congress . . . App. 1

***Amici Curiae* Members of Congress**

United States Senators

SEN. PATRICK J. LEAHY (D VT)

SEN. ORRIN G. HATCH (R - UT)

SEN. MICHAEL F. BENNET (D - CO)

Members of the United States House of Representatives

REP. LAMAR S. SMITH (R - TX)

REP. ROBERT W. GOODLATTE (R - VA)

REP. STEVEN J. CHABOT (R - OH)

Nos. 14-1513 & 14-1520

IN THE

Supreme Court of the United States

HALO ELECTRONICS, INC.,
Petitioner,

v.

PULSE ELECTRONICS, INC., ET AL.,
Respondents.

STRYKER CORP., ET AL.,
Petitioners,

v.

ZIMMER, INC., ET AL.,
Respondents.

On Writs of Certiorari to the United States Court of Appeals for the Federal Circuit

BRIEF OF DELL, APPLIED MATERIALS, BJ'S WHOLESALE CLUB, INC., CCIA, CTIA, FACEBOOK, GLOBAL AUTOMAKERS, HP, HTC, THE INTERNET ASSOCIATION, JCPENNEY, LIMELIGHT NETWORKS, MGA ENTERTAINMENT, MICRON, NATIONAL RETAIL FEDERATION, QVC, RACKSPACE, RED HAT, SAMSUNG ELECTRONICS, SANDISK, SAS, VARIAN MEDICAL SYSTEMS, VIZIO, AND XEROX AS *AMICI CURIAE* IN SUPPORT OF RESPONDENTS

ANTHONY PETERMAN
MICHELE K. CONNORS
DELL INC.
One Dell Way
Round Rock, TX 78682
(512) 728-3186

JOHN THORNE
Counsel of Record
GREGORY G. RAPAWY
KELLOGG, HUBER, HANSEN,
TODD, EVANS & FIGEL, PLLC
1615 M Street, N.W.
Suite 400
Washington, D.C. 20036
(202) 326-7900
(jthorne@khhte.com)

January 20, 2016

(Additional Counsel Listed On Inside Cover)

CRAIG E. DAVIS
SR. LITIGATION COUNSEL
HP INC.
1501 Page Mill Road
Palo Alto, CA 94304
(650) 236-9259

BERNARD SHEK
SANDISK CORPORATION
951 SanDisk Drive
Milpitas, CA 95035
(408) 801-1000

ALLEN SOKAL
BAKERHOSTETLER
1050 Connecticut Ave., N.W.,
Suite 1100
Washington, D.C. 20036
(202) 861-1500

TABLE OF CONTENTS

Page

TABLE OF AUTHORITIES iii

INTEREST OF *AMICI CURIAE* 1

INTRODUCTION AND SUMMARY 2

ARGUMENT 5

I. ENHANCED DAMAGES FOR PATENT INFRINGEMENT HAVE LONG BEEN UNDERSTOOD AS PUNITIVE DAMAGES FOR EGREGIOUS, WILLFUL MISCONDUCT 5

A. Congress Rejected Broad Treble Damages in the Patent Act of 1836 5

B. The Courts Treated Enhanced Damages Under the 1836 Act as Punitive Damages 8

1. *Seymour v. McCormick* Reserved Enhanced Damages for the "Wanton and Malicious Pirate" 8

2. Other Pre-1952 Cases Support the Necessary Link Between Culpability and Enhanced Damages 9

C. The Patent Act of 1952 Incorporates the Historical Culpability Requirement 12

D. Enhanced Damages Cannot Be Used for Compensatory, Non-Punitive Purposes 15

II. PUNISHMENT FOR PATENT INFRINGEMENT REQUIRES THE KNOWING OR RECKLESS VIOLATION OF AN OBJECTIVELY CLEAR LEGAL DUTY 18

A. Basic Principles and Established Practice Show the Need for an Objectively Clear Line Before Imposing Punishment 18

1. Courts Do Not Punish Infringers in Objectively Close Cases 21

2. Similar Objective Tests for Willfulness Govern Other Areas of the Law 23

B. An Objectively Reasonable Trial Defense Should Bar Enhanced Damages 26

1. *Safeco* Rejected Inquiry Into the Mental State of Defendants with Objectively Reasonable Defenses 26

2. Section 298 Forbids Punishing an Infringer for Failure To Obtain a Legal Opinion in Advance 29

3. Objective Reasonableness Is Important To Enable Meaningful Appellate Review of Enhanced Damage Awards 30

C. At a Minimum, Objective Reasonableness Is Strong Evidence That Enhanced Damages Are Inappropriate 31

CONCLUSION 32

ADDENDUM

TABLE OF AUTHORITIES

Page

CASES

Alice Corp. Pty. Ltd. v. CLS Bank Int'l, 134 S. Ct. 2347 (2014) 1

Ankenbrandt v. Richards, 504 U.S. 689 (1992) 13

Aro Mfg. Co. v. Convertible Top Replacement Co., 377 U.S. 476 (1964) 13

B.F. Goodrich Co. v. Consolidated Rubber Tire Co., 251 F. 617 (7th Cir. 1918) 11

Blonder-Tongue Labs., Inc. v. University of Illinois Found., 402 U.S. 313 (1971) 21

BMW of N. Am., Inc. v. Gore, 517 U.S. 559 (1996) 19

Brodie v. Ophir Silver Min. Co., 4 F. Cas. 202 (C.C.D. Cal. 1867) 11

Brown Bag Filing Mach. Co. v. Drohen, 175 F. 576 (2d Cir. 1910) 10-11

Clark v. Schieble Toy & Novelty Co., 248 F. 276 (6th Cir. 1917) 11

Clark v. Wooster, 119 U.S. 322 (1886) 16

Consolidated Rubber Tire Co. v. Diamond Rubber Co. of New York, 226 F. 455 (S.D.N.Y. 1915), *aff'd*, 232 F. 475 (2d Cir. 1916) 4, 22, 30

Cooper Indus. v. Leatherman Tool Group, Inc., 532 U.S. 424 (2001) 17-18

Corning v. Burden, 56 U.S. (15 How.) 252 (1854) 6

Creagmile v. John Bean Mfg. Co., 32 F. Supp. 646 (S.D. Cal. 1940) 12

Day v. Woodworth, 54 U.S. (13 How.) 363 (1852) 17

Delano v. Scott, 7 F. Cas. 378 (E.D. Pa. 1835) 6-7

Dowling v. United States, 473 U.S. 207 (1985) 13

Enterprise Mfg. Co. v. Shakespeare Co., 141 F.2d 916 (6th Cir. 1944) 11

Exxon Shipping Co. v. Baker, 554 U.S. 471 (2008) 18

Farmer v. Brennan, 511 U.S. 825 (1994) 20

FCC v. Fox Television Stations, Inc., 132 S. Ct. 2307 (2012) 19

Fishman Transducers, Inc. v. Paul, 684 F.3d 187 (1st Cir. 2012) 24, 25

Fryer v. A.S.A.P Fire & Safety Corp., 658 F.3d 85 (1st Cir. 2011) 25

FTC v. Network Servs. Depot, Inc., 617 F.3d 1127 (9th Cir. 2010) 25

General Motors Corp. v. Dailey, 93 F.2d 938 (6th Cir. 1937) 11

Grant Paper Box Co. v. Russell Box Co., 106 F. Supp. 616 (D. Mass. 1952), *aff'd*, 203 F.2d 177 (1st Cir. 1953) 15

Guyon v. Serrell, 11 F. Cas. 132 (C.C.S.D.N.Y. 1847) 12

Independent Fed'n of Flight Attendants v. Zipes, 491 U.S. 754 (1989) 2

La Quinta Corp. v. Heartland Props. LLC, 603 F.3d 327 (6th Cir. 2010) 24

Livingston v. Woolworth, 56 U.S. (15 How.) 546 (1854) 10, 12

Lorillard v. Pons, 434 U.S. 575 (1978) 13

Martin v. Franklin Capital Corp., 546 U.S. 132 (2005) 2

McBoyle v. United States, 283 U.S. 25 (1931) 18-19

McLaughlin v. Richland Shoe Co., 486 U.S. 128 (1988) 20

Microsoft Corp. v. i4i Ltd. P'ship, 131 S. Ct. 2238 (2011) 13

Mowry v. Whitney, 81 U.S. (14 Wall.) 620 (1872) 10

Nautilus, Inc. v. Biosig Instruments, Inc., 134 S. Ct. 2120 (2014) 1

Olem Shoe Corp. v. Washington Shoe Corp., 591 F. App'x 873 (11th Cir. 2015) 24

Philadelphia, W. & B. R.R. Co. v. Quigley, 62 U.S. (21 How.) 202 (1859) 9

Reynolds v. Hartford Fin. Servs. Grp., 435 F.3d 1081 (9th Cir. 2006), *rev'd sub nom. Safeco Ins. Co. of Am. v. Burr*, 551 U.S. 47 (2007) 27

Rockwood v. General Fire Extinguisher Co., 37 F.2d 62 (2d Cir. 1930) 23, 31

Root v. Railway Co., 105 U.S. (15 Otto.) 189 (1882) 10

Russell v. Place, 21 F. Cas. 57 (N.D.N.Y. 1871) 15

Safeco Ins. Co. of Am. v. Burr, 551 U.S. 47 (2007) 3, 13, 20, 21, 23, 24, 25, 26, 27, 28, 29, 31

Saba v. Compagnie Nationale Air France, 78 F.3d 664 (D.C. Cir. 1996) 25

Screws v. United States, 325 U.S. 91 (1945) 19

Seagate Tech. LLC, In re, 497 F.3d 1360 (Fed. Cir. 2007) 3, 4, 14, 15, 20 21, 23, 24, 29, 30

SEC v. Steadman, 967 F.2d 636 (D.C. Cir. 1992) 25

Seymour v. McCormick, 57 U.S. (16 How.) 480 (1854) 3, 4, 5, 8-9, 10, 12, 13, 16, 18, 32

Smith v. Prior, 22 F. Cas. 629 (C.C.D. Cal. 1873)..... 23

Spano v. Safeco Corp., 140 F App'x 746 (9th Cir. 2005), *rev'd sub nom. Safeco Ins. Co. of Am. v. Burr*, 551 U.S. 47 (2007)..... 27

Square D Co. v. Niagara Frontier Tariff Bureau, Inc., 476 U.S. 409 (1986)..... 13

State Farm Mut. Auto. Ins. Co. v. Campbell, 538 U.S. 408 (2003) 9

State Indus. v. A.O. Smith Corp., 751 F.2d 1226 (Fed. Cir. 1985)..... 21

Teese v. Huntingdon, 64 U.S. (23 How.) 2 (1860) 17

Teva Pharm. USA, Inc. v. Sandoz, Inc., 135 S. Ct. 831 (2015) 26

Tilghman v. Proctor, 125 U.S. 136 (1888)..... 10

Toledo Computing Scale Co. v. Moneyweight Scale Co., 178 F. 557 (C.C.N.D. Ill. 1910), *aff'd*, 187 F. 826 (7th Cir. 1911)..... 11 12, 23

United Carbon Co. v. Binney & Smith Co., 317 U.S. 228 (1942) 19

United States v. Burr, 25 F. Cas. 30 (C.C.D. Va. 1807)..... 2

Van Straaten v. Shell Oil Prods. Co., 678 F.3d 486 (7th Cir. 2012).....24, 31

Vortex Mfg. Co. v. Ply-Rite Contracting Co., 33 F.2d 302 (D. Md. 1929)..... 12

Vrooman v. Penhollow, 222 F. 894 (6th Cir. 1915)..... 11

Wedge v. Waynesboro Nurseries, Inc., 31 F Supp. 638 (W.D. Va. 1940) 12

Welling v. La Bau, 35 F. 302 (C.C.S.D.N.Y. 1888) 11, 22

Yarway Corp. v. Eur-Control USA, Inc., 775 F.2d 268 (Fed. Cir. 1985) 14

Yellow Pages Photos, Inc. v. Ziplocal, LP, 795 F.3d 1255 (11th Cir. 2015) 24

STATUTES AND RULES

Act of October 29, 1919, ch. 89, § 2 , 41 Stat. 324, 324, then codified at 18 U.S.C. § 408 19

Fair and Accurate Credit Transactions Act, Pub. L. No. 108-159, 117 Stat. 1952 (2003) 24

Fair Credit Reporting Act, Pub. L. No. 91-508, 84 Stat. 1114 20

Lanham Act, 15 U.S.C. § 1117(a) 23

Leahy-Smith America Invents Act, Pub. L. No. 112-29, § 17 , 125 Stat. 284, 329 (2011) 26

35 U.S.C. § 298 ..... 4, 14, 26, 29, 30, 32

Patent Act of 1793, ch. 11, § 5, 1 Stat. 318, 322 5

Patent Act of 1800, ch. 25, § 3, 2 Stat. 37, 38 6

Patent Act of 1836, ch. 357, § 14, 5 Stat. 117, 123 ..... 5, 7

Patent Act of 1952, Pub. L. No. 82-593, 66 Stat. 792 ..... 3, 12

35 U.S.C. § 284 ..... 2, 3, 4, 5, 12, 14, 15, 17, 18, 23

35 U.S.C. § 285 16

Uniformed Services Employment and Reemployment Rights Act, Pub. L. No. 103-353, 108 Stat. 3149 (1994) 25

§ 4323(d)(1)(C) 25

15 U.S.C. § 1681n 24

17 U.S.C. § 504(c)(2) 25

Fed. R. Civ. P 52(a) 26

Sup. Ct. R.

37.3(a) 1

37.6 1

LEGISLATIVE MATERIALS

S. Rep. Accompanying Senate Bill No. 239, 24th Cong., 1st Sess. (1836) 7

OTHER MATERIALS

Brief for the United States as *Amicus Curiae*, *Safeco Ins. Co. of Am. v, Burr*, Nos. 06-84, et al. (U.S. filed Nov. 13, 2006), 2006 WL 3336481 28

Thomas Cooper, *The Emporium of Arts and Sciences* (2d ed. 1813) 6

Daniel B. Dobbs, et al., The Law of Torts (2d ed. 2011) 13

W. Keeton, et al., *Prosser and Keeton on Law of Torts* (5th ed.1984) 20

Andrew P Morriss & Craig Allen Nard, *Institutional Choice & Interest Groups in the Development of American Patent Law: 1790-1865,* 19 Sup. Ct. Econ. Rev. 143 (2011) 6

Reply Brief for Petitioners, *Safeco Ins. Co. of Am. v, Burr*, Nos. 06-84, et al. (U.S. filed Jan. 9, 2007), 2007 WL 62300 28

Respondents' Joint Brief on the Merits, *Safeco Ins. Co. of Am. v, Burr*, Nos. 06-84, et al. (U.S. filed Dec. 18, 2006), 2006 WL 3760845 28

Edward C. Walterscheid, *To Promote the Useful Arts: American Patent Law and Administration, 1798-1836* (1998) 6

Gordon M. Winder, *The American Reaper: Harvesting Networks and Technology, 1830-1910* (2012) 8

INTEREST OF *AMICI CURIAE*[1]

Amici are technology companies, trade associations of Internet, wireless communications, automotive, and computer companies, and retailers that use and sell high-tech products. We represent more than $5 trillion of market capitalization and employ many of the world's most innovative computer scientists and engineers.[2]

Insisting on objectively clear lines as a predicate for enhanced damages is especially important in patent cases involving technology companies, which often involve old, fuzzy patents (issued before this Court's decisions in *Alice Corp. Pty. Ltd. v. CLS Bank International*, 134 S. Ct. 2347 (2014), and *Nautilus, Inc. v. Biosig Instruments, Inc.*, 134 S. Ct. 2120 (2014), and before the Patent Office's patent quality improvement initiatives) and complex products that use technology from multiple suppliers. Reliably determining whether such products infringe such patents often involves an inordinate amount of lawyer time and fact investigation.

---

[1] Pursuant to Supreme Court Rule 37.6, counsel for *amici* represent that they authored this brief in its entirety and that none of the parties or their counsel, nor any other person or entity other than *amici* or their counsel, made a monetary contribution intended to fund the preparation or submission of this brief. Pursuant to Rule 37.3(a), counsel for *amici* represent that all parties have consented to the filing of this brief. The parties in No. 14-1513 and petitioners in No. 14-1520 filed letters with the Clerk granting blanket consent; written consent of respondents in No. 14-1520 is being submitted contemporaneously with this brief.

[2] *Amici* are fully listed in the Addendum to this brief.

INTRODUCTION AND SUMMARY

Under 35 U.S.C. § 284, if patent damages have been found by a jury or assessed by the court, "the court may increase the damages up to three times the amount found or assessed." Discretion conferred by the statutory term "may" "is rarely without limits" supplied by context, *Independent Fed'n of Flight Attendants v. Zipes*, 491 U.S. 754, 758-59 (1989), and must always be exercised according to "'sound legal principles,'" *Martin v. Franklin Capital Corp.*, 546 U.S. 132, 139 (2005) (quoting *United States v. Burr*, 25 F. Cas. 30, 35 (C.C.D. Va. 1807) (Marshall, C.J.)). The present cases concern the principles that inform and the limits that constrain discretion under § 284.

The Patent Act's history and this Court's precedents show that a district court may award enhanced damages only as punishment for culpable misconduct – which means willful patent infringement. Respondents have made these points ably. *See* Pulse Br. 13-19; Zimmer Br. 11-19. Even the Solicitor General, despite his support for petitioners, concludes that § 284 "should be construed to ratify and incorporate the pre-existing standards under which courts could award enhanced damages to punish egregious misconduct." U.S. Br. 8.

Petitioners resist that conclusion. They argue that a district court may enhance damages "even if a defendant's conduct is not aggravated in any sense," based on a "case-by-case" finding that ordinary damages do not compensate the patent holder. *E.g.*, Stryker Br. 42. That would be an unwarranted departure from the interpretation long given to § 284 and its predecessors by this Court, and the intent of Congress to adopt that interpretation.

Part I of this brief sets forth the historical background of § 284 in detail, to show that petitioners' rendition of the history is fundamentally incorrect. That background shows overwhelmingly that § 284 was intended as a punitive-damages provision, which courts would use to punish willful and egregious misconduct. Indeed, the role of enhanced patent damages as a statutory form of punitive damages was settled by this Court more than 150 years ago, when it identified the predecessor of § 284 as intended to punish the "wanton and malicious pirate" of a patented invention. *Seymour v. McCormick*, 57 U.S. (16 How.) 480, 488 (1854). This Court and the lower federal courts reiterated that understanding in many cases before the Patent Act of 1952, Pub. L. No. 82-593, 66 Stat. 792, and Congress did nothing to redefine enhanced damages as anything other than punitive when it enacted § 284 in its present form. The identification of § 284 with punishment should now be firmly settled.

Part II shows that the understanding of § 284 as punishment for culpable misconduct explains and justifies not only the subjective part of the *Seagate* test (which concerns the infringer's mental state) but also the objective part (which focuses on the reasonableness of the infringer's legal position). *See In re Seagate Tech., LLC*, 497 F.3d 1360, 1371 (Fed. Cir. 2007) (en banc). Before a court punishes for wrongdoing, it should ensure that the alleged wrongdoer stepped across a clear line and did so on purpose – or, at least, with reckless disregard for a legal obligation. That principle is recognized in *Safeco Insurance Co. of America v. Burr*, 551 U.S. 47, 68 (2007), in which the Court adopted (at the urging of the United States) a rule that a defendant's subjective

good faith is irrelevant to willfulness where that defendant's legal position is objectively reasonable. The same principle is recognized in venerable patent precedent, such as *Consolidated Rubber Tire Co. v. Diamond Rubber Co. of New York*, 226 F. 455 (S.D.N.Y. 1915), *aff'd*, 232 F 475 (2d Cir. 1916), in which Judge Learned Hand explained that enhanced damages are appropriate only when infringers have done "what they *necessarily* knew they had no right to do." *Id.* at 464 (emphasis added). And it prevails in other areas of the law involving statutory punishment for theft of rights and violations of complex regulatory schemes.

In the context of the Patent Act, that traditional principle is further reinforced by Congress's directive forbidding courts from finding willfulness based on a "failure to obtain the advice of counsel with respect to any allegedly infringed patent." 35 U.S.C. § 298. If the courts were to apply petitioners' proposed rule, they would be doing just that: disregarding reasonable legal defenses in order to punish conduct as willful because those defenses were first raised at trial and not prepared in an earlier opinion of counsel.

This Court should hold, as the Federal Circuit did in *Seagate*, that punishment for patent infringement is appropriate only if an accused infringer knowingly or recklessly disregards an objectively high risk of infringing a valid patent – that is, where "wanton and malicious pirate[s]," *Seymour*, 57 U.S. (16 How.) at 488, have done what "they necessarily knew they had no right to do," *Consolidated Rubber*, 226 F. at 464. Outside such fortunately rare cases, a patent holder is restricted to seeking the ordinary recovery of "damages adequate to compensate for infringement." 35 U.S.C. § 284.

ARGUMENT

I. ENHANCED DAMAGES FOR PATENT INFRINGEMENT HAVE LONG BEEN UNDERSTOOD AS PUNITIVE DAMAGES FOR EGREGIOUS, WILLFUL MISCONDUCT

This Court should reject petitioners' contention that a district court may enhance damages because it believes a particular patentee has not been adequately compensated by ordinary damages for patent infringement. Enhancement is appropriate only to punish wrongdoing, and wrongdoing means willful patent infringement. Those conclusions follow because enhanced damages have been recognized as punitive damages for more than 150 years, at least since *Seymour*; and that settled judicial understanding was confirmed as a matter of statutory law when Congress enacted § 284 without substantive change.

A. Congress Rejected Broad Treble Damages in the Patent Act of 1836

Current § 284 descends from § 14 of the Patent Act of 1836, ch. 357, 5 Stat. 117, 123, and inherits its punitive nature. To understand why courts have long considered those provisions punitive, it is useful to look at the status quo that Congress rejected in 1836.

The Patent Act of 1793 contained the first treble-damages provision in American patent law. Ch. 11, § 5, 1 Stat. 318, 322. In it, Congress mandated that patentees receive "at least" three times the sale price or licensing fee charged for use of the invention.[3] A

---

[3] The mandatory treble-damage provision in the Patent Act of 1793 was apparently motivated by a fear that juries would be hostile to patent rights; it has been traced to an influential pamphlet arguing that "'the people, in the remote parts of the states are opposed to all patent rights. [I]n all probability, a jury of them would bring in a verdict of *one dime* damages

few years later, Congress modified the rule by instructing courts to award an amount "equal to" three times actual damages. Patent Act of 1800, ch. 25, § 3, 2 Stat. 37, 38.

The heavy damages available under those early patent statutes were coupled with a regime under which patents were remarkably easy to obtain.[4] The combination of practically unrestricted access to patents and the promise of mandatory treble damages led to a great deal of litigation. On the one hand, patents were widely regarded with suspicion, and genuine inventors (such as Eli Whitney, the inventor of the cotton gin) struggled to enforce their rights.[5] On the other, a patent allowed its holder to threaten a ruinous damages award. To avoid that risk, many accused infringers paid royalties on patents with only the thinnest veneers of legality.[6]

---

in favor of the patentee, as an *indication* for him, *not* to visit them again.'" Edward C. Walterscheid, *To Promote the Useful Arts: American Patent Law and Administration, 1798-1836*, at 210 (1998).

[4] *See Corning v. Burden*, 56 U.S. (15 How.) 252, 270 (1854) (under the 1793 Act, "[n]o examination was made by persons qualified to judge whether the alleged invention was new or useful, or had been patented before").

[5] *See* Andrew P. Morriss & Craig Allen Nard, *Institutional Choice & Interest Groups in the Development of American Patent Law: 1790-1865*, 19 Sup. Ct. Econ. Rev. 143, 177 & n.40 (2011) (quoting letter from Whitney describing his "'great difficulty in proving that the machine had been used in Georgia, although, at the same moment, there were three separate sets of this machinery in motion, within fifty yards of the building in which the court sat'").

[6] *See* Thomas Cooper, *The Emporium of Arts and Sciences* 435 (2d ed. 1813) (describing the problem of "frivolous, absurd, and fraudulent" patents that "threaten[ed] to become taxes on the community"); *see also Delano v. Scott*, 7 F Cas. 378, 382

As the congressional report accompanying the Patent Act of 1836 described the situation, a "considerable portion of all the patents granted [we]re worthless and void"; the "country [had] become[] flooded with patent monopolies"; and the result was a "great number of lawsuits daily increasing in an alarming degree, onerous to the courts, ruinous to the parties, and injurious to society." S. Rep. Accompanying Senate Bill No. 239, at 3, 24th Cong., 1st Sess. (1836). It recommended changes not only to protect the "original and meritorious inventor [who] sees his invention pirated from him," but also to stop the "unjust and iniquitous" practice of "exact[ing]" a "patent price or commutation tribute" for inventions that "ha[ve] been long in public use." *Id.* at 3-4.

The result was the Patent Act of 1836. That statute eliminated both the ministerial standard for issuing patents and mandatory treble damages for infringing them. In place of the ministerial standard, the 1836 Act created the Patent Office to evaluate the legitimacy of patent applications. In place of mandatory treble damages, § 14 provided an entitlement to "actual damages," and authority for the district court to increase the actual-damages amount by up to three times, "according to the circumstances of the case." Ch. 357, § 14, 5 Stat. at 123.

(E.D. Pa. 1835) (describing a "case recorded of a patent for using the common stone coal in a common blacksmith's forge"; by "exhibiting his parchment patent with the great seal of the department of state, and the signatures of the high officers of government," the patentee was able to "alarm an ignorant smith, and sell him a right for two or three dollars, or whatever he could get for it").

B. The Courts Treated Enhanced Damages Under the 1836 Act as Punitive Damages

1. *Seymour v. McCormick* Reserved Enhanced Damages for the "Wanton and Malicious Pirate"

In *Seymour*, this Court gave the enhanced-damages provision of the 1836 Act an authoritative interpretation as punitive. The patentee in that case was Cyrus McCormick, the iconic American inventor who patented the first mechanical reaper.[7] At issue in *Seymour* was not McCormick's original reaper patent (which had expired) but a later patent for a seat-and-reel design that allowed farmers to sit on the reaper rather than walk beside it. *See* 57 U.S. (16 How.) at 491. A jury found that Seymour (a manufacturer) had infringed the seat-and-reel patent and that the patent was valid. The jury awarded damages based on the entire value of the reapers, rather than the value added by the seat and reel. *See id.* at 485. On appeal, Seymour argued that the award exceeded the statutory remedy of "'actual damage[s]'" under § 14. *See id.* at 481-82.

This Court agreed. It explained that the 1836 Act made enhanced damages discretionary because a "very great injustice" had resulted under the mandatory trebling regime: "The defendant who acted in ignorance or good faith was made liable to the same penalty with the wanton and malicious pirate." *Id.* at 488. Drawing an analogy to common-law punitive damages, the Court identified § 14 as similar to the rule that permitted "vindictive or exemplary

---

[7] The London Times described McCormick's reaper as a "'cross between an Astley chariot, a wheelbarrow, and a flying machine.'" Gordon M. Winder, *The American Reaper: Harvesting Networks and Technology, 1830-1910*, at 160 (2012).

damages, not to recompense the plaintiff, but to punish the defendant," if the injury caused by the defendant was "wanton or malicious." *Id.* at 489.

As the *Seymour* Court explained, an award of the entire value of Seymour's reapers went so far beyond making McCormick whole that the Court equated it with punishment rather than compensation. By making "even the smallest part" of the challenged invention "equal to the whole," the trial court had blurred the line between "'actual damages' to the plaintiff" and "penalties on the defendant." *Id.* at 490-91. The Court refused to permit that blurring. McCormick could recover only the "usual license price" for the seat-and-reel improvement. *Id.* at 491.

2. Other Pre-1952 Cases Support the Necessary Link Between Culpability and Enhanced Damages

Seymour identified the target for enhanced damages as the "wanton and malicious pirate," 57 U.S. (16 How.) at 488, which alone would suggest that enhanced damages would be appropriate only where a defendant's acts were highly culpable. Other nineteenth-century cases involving traditional punitive damages further support the point. *See, e.g., Philadelphia, W. & B. R.R. Co. v. Quigley*, 62 U.S. (21 How.) 202, 214 (1859) ("Whenever the injury complained of has been inflicted maliciously or wantonly, and with circumstances of contumely or indignity, the jury are not limited to the ascertainment of a simple compensation for the wrong committed against the aggrieved person."). That is still the law of punitive damages today. *See State Farm Mut. Auto. Ins. Co. v. Campbell*, 538 U.S. 408, 419 (2003) ("[P]unitive damages should only be awarded if the defendant's culpability, after having paid compensa-

tory damages, is so reprehensible as to warrant the imposition of further sanctions to achieve punishment or deterrence.").

Applying that principle in the patent context, this Court ruled out penalties for infringement where the defendant's conduct was not culpable. In *Livingston v. Woolworth*, 56 U.S. (15 How.) 546 (1854), decided earlier in the same Term as *Seymour*, the Court reversed an award of damages that had been justified as "punishment" for infringement, reasoning in part that there had been "no ground whatever" for the imposition of a "penalty" because the defendants there "might well have supposed" that they had a right to use the patented invention based on a license from a different patent holder. *Id.* at 559-60. Similarly, in *Mowry v. Whitney*, this Court found that a defendant's "infringement was not wanton" because he had a patent of his own and so "had before him the judgment of the Patent Office that his process was not an invasion of the patent granted to the complainant." 81 U.S. (14 Wall.) 620, 653 (1872); *id.* (refusing to award interest for this reason).[8]

The circuit courts did likewise. In *Brown Bag Filing Machine Co. v. Drohen*, the Second Circuit affirmed a district court's refusal to enhance damages:

---

[8] This Court also recognized the punitive character of enhanced damages under § 14 in *Root v. Railway Co.*, 105 U.S. (15 Otto.) 189, 196 (1882), and *Tilghman v. Proctor*, 125 U.S. 136, 143-44 (1888), on which the *Halo* petitioners rely. They cite those cases to show that the infliction of punitive damages was discretionary. *See* Halo Br. 14-15. True, a district court may in its discretion decline to punish willful infringement, *see* Pet. App. 142a n.1 (Taranto, J., concurring in denial of rehearing en banc), but its discretion is still discretion to punish misconduct. That classification of enhancement as punitive cabins its permissible uses.

the case did not "warrant[] the application of the [enhanced damages] statute" because "[t]he defenses presented debatable questions, and it [could not] be said that the defendant's course was actuated by malice or bad faith." 175 F. 576, 577 (2d Cir. 1910). In *Vrooman v. Penhollow*, the Sixth Circuit perceived "no foundation for double damages" because the defendant could not "be regarded as intending a willful injury." 222 F. 894, 899 (6th Cir. 1915).[9] And in *B.F. Goodrich Co. v. Consolidated Rubber Tire Co.*, the Seventh Circuit affirmed a refusal to enhance damages because, despite circumstances that indicated willfulness, it was not "clearly convinced that good faith [was] absent." 251 F. 617, 625 (7th Cir. 1918). Many pre-1952 district court cases similarly treated the absence of willful misconduct as incompatible with enhanced damages.[10]

---

[9] The Sixth Circuit made the same point in a number of other pre-1952 cases. *See Clark v. Schieble Toy & Novelty Co.*, 248 F. 276, 284 (6th Cir. 1917) (finding "no foundation for treble damages" because the defendant "c[ould] scarcely be treated as having intended a willful injury"); *General Motors Corp. v. Dailey*, 93 F.2d 938, 942 (6th Cir. 1937) ("Simply questioning the validity of the patent does not constitute wilful infringement."); *Enterprise Mfg. Co. v. Shakespeare Co.*, 141 F.2d 916, 921 (6th Cir. 1944) ("If honestly mistaken as to a reasonably debatable question of validity, an infringer should not be made to smart in punitive damages.").

[10] *See, e.g., Brodie v. Ophir Silver Min. Co.*, 4 F Cas. 202, 204 (C.C.D. Cal. 1867) (power to increase damages "should only be exercised to remunerate parties who have been driven to litigation to sustain their patents by wanton and persistent infringement"); *Welling v. La Bau*, 35 F. 302, 304 (C.C.S.D.N.Y. 1888) (no enhanced damages because "the defendant's course, though annoying to the complainant, was not, in a legal sense, wanton, unjustifiable, or vexatious"); *Toledo Computing Scale Co. v. Moneyweight Scale Co.*, 178 F. 557, 567 (C.C.N.D. Ill. 1910) ("[W]hile showing an aggravated case of unfair competi-

C. The Patent Act of 1952 Incorporates the Historical Culpability Requirement

The Patent Act of 1952 left the rule governing enhanced patent damages substantively unchanged. Current § 284, like previous § 14, does not prescribe a standard for enhancing damages: it states merely that "the court may increase the damages up to three times." Nothing in the statutory text indicates any legislative desire to make enhanced damages available for infringement outside the punitive context recognized by *Seymour*, *Livingston*, and similar cases. To the contrary, § 284 defines ordinary, non-enhanced damages as "damages adequate to compensate for infringement"; thus, enhanced damages are more than necessary for adequate compensation.

As a result, this is a case in which Congress has acted against the background of a "longstanding and well-known construction" of a prominent federal statute; in which Congress has "made substantive

---

tion, [the facts] should not subject defendant to increased damages because it was not then knowingly infringing "), *aff'd*, 187 F. 826 (7th Cir. 1911); *Vortex Mfg. Co. v. Ply-Rite Contracting Co.*, 33 F.2d 302, 313 (D. Md. 1929) (disagreeing with plaintiff's "claims that defendants' conduct has been sufficiently aggravating and wanton as to warrant the imposing of treble damages"); *Creagmile v. John Bean Mfg. Co.*, 32 F. Supp. 646, 649 (S.D. Cal. 1940) (defendants' evidence "sufficient to negative any bad faith in the infringing acts of the defendants so as to preclude any right of plaintiffs to recover aggravated damages in this action"); *Wedge v. Waynesboro Nurseries, Inc.*, 31 F. Supp. 638, 644 (W.D. Va. 1940) (refusing to apply "the triple-damages statute" because the defendants "believed [the patents] to be invalid" and the court had rejected their invalidity defense only after "careful study and consideration"); *see also Guyon v. Serrell*, 11 F. Cas. 132, 133 (C.C.S.D.N.Y. 1847) (pre-*Seymour* case finding enhanced damages inappropriate where "[t]he party infringing the patent may have been misled by the specification, and have honestly supposed that it was void").

changes to the statute in other respects"; but in which Congress gave no "indication that [it] intended to alter" the rule adopted in this Court's cases. *Ankenbrandt v. Richards*, 504 U.S. 689, 700-01 (1992). In similar circumstances, this Court has often concluded that the legislature has "'adopt[ed] th[e] interpretation'" previously advanced by the judiciary. *E.g.*, *id.* at 701 (quoting *Lorillard v. Pons*, 434 U.S. 575, 580 (1978)); *Square D Co. v. Niagara Frontier Tariff Bureau, Inc.*, 476 U.S. 409, 419-20 (1986) (giving weight to a showing that Congress "carefully reexamined [an] area of the law" and did not "see fit to change" settled precedent); *see also Microsoft Corp. v. i4i Ltd. P'ship*, 131 S. Ct. 2238, 2246 (2011) (adhering to pre-1952 case law that Congress manifested no intention to change).

That conclusion is reinforced by post-1952 cases in which this Court has referred to the culpability requirement for enhanced damages, using the somewhat more modern term "willful" in place of *Seymour*'s "wanton and malicious." *See, e.g.*, *Dowling v. United States*, 473 U.S. 207, 227 n.19 (1985) ("Among the available remedies are treble damages for willful infringement."); *Aro Mfg. Co. v. Convertible Top Replacement Co.*, 377 U.S. 476, 508 (1964) (observing that a patentee "could in a case of willful or bad-faith infringement recover punitive or 'increased' damages under the statute's trebling provision").[11] The Federal Circuit also treated the rule as established

---

[11] *See Safeco*, 551 U.S. at 57 (citing Prosser & Keeton for the proposition that courts have "'consistently ignored" any "distinctions" between the "terms 'willful,' 'wanton' and 'reckless'"); Daniel B. Dobbs, et al., *The Law of Torts* § 32 n.1 (2d ed. 2011) (observing that it is "almost impossible" and "in any event serves no purpose" to attempt to distinguish among willful, wanton, and reckless conduct).

shortly after the creation of that court. *See Yarway Corp. v. Eur-Control USA, Inc.*, 775 F.2d 268, 277 (Fed. Cir. 1985) ("It is well-settled that enhancement of damages must be premised on willful infringement or bad faith."). It is further reinforced by Congress's recent enactment of 35 U.S.C. § 298, which refers to the traditional test for "willful[] infringement." *See infra* pp. 29-30.

Traditional principles of statutory interpretation and of *stare decisis* weigh strongly in favor of retaining the long-held understanding that enhanced damages for patent infringement are punishment appropriate only for willful, egregious conduct. Notably, several *amici* that have urged this Court to reject the Federal Circuit's *Seagate* precedent – including, most conspicuously, the Solicitor General – agree that § 284 incorporates a historical requirement for culpable conduct before a district court may enhance damages. *See* U.S. Br. 15 ("[T]he settled understanding [in 1952] was that enhanced damages should not be awarded in the typical patent-infringement case, but should be reserved to punish egregious conduct that the district court concluded was intentional, willful, or undertaken in bad faith.").[12] Although the present *amici* disagree with other parts of the Solicitor General's position – and, in particular, believe

---

[12] *See also* AIPLA Br. 3 ("[w]illfulness has always been a necessary predicate" for enhanced damages); Ericsson Br. 22 (urging the Court to "hold, in line with many of its prior cases, that enhancement is appropriate for willful or bad-faith infringement"); IP Professors Br. 3 (enhanced damages should be imposed only for "egregious or especially wrongful infringement of a patent generally known as willful infringement"); *cf.* Askeladden Br. 3-6, 9 (taking no position on whether *Seagate* should be retained; arguing that willfulness was an "established standard" in 1952; "no basis" to think Congress changed it).

that the punitive purpose of § 284 weighs strongly in favor of retaining the objective element of the *Seagate* analysis, *see infra* Part II – that key point of agreement is worth noting.

D. Enhanced Damages Cannot Be Used for Compensatory, Non-Punitive Purposes

Petitioners argue that enhanced damages under § 284 should not be limited to culpable conduct, and can instead be "appropriately punitive, compensatory, or both." Halo Br. 15; *see* Stryker Br. 29-30 ("[f]rom 1836 forward, [c]ourts continued to enhance damages for compensatory purposes"). There is a fatal textual flaw in that argument: it overlooks Congress's definition of ordinary damages as the amount "adequate to compensate for the infringement." 35 U.S.C. § 284. But even if petitioners could solve that problem (which they cannot), their position would still lack basis in precedent or history.

Petitioners cite no case from this Court or any court of appeals that has upheld an award of enhanced damages from 1836 to the present day without an accompanying finding of punishable fault on the part of the infringing defendant. Nor do they cite any trial or district court case during that 180-year period that awarded enhanced damages without a culpability finding.[13] Instead, they rely on state-

---

[13] Neither *Russell v. Place*, 21 F. Cas. 57 (N.D.N.Y. 1871), which enhanced damages for infringement that "seem[ed] deliberate and intentional," *id.* at 58, nor *Grant Paper Box Co. v. Russell Box Co.*, 106 F. Supp. 616 (D. Mass. 1952), *aff'd*, 203 F.2d 177 (1st Cir. 1953), which relied in part on a finding of "'carelessness,'" *id.* at 619, are to the contrary. Although those cases should have made a clearer finding of willfulness, neither suggested that it would be appropriate to enhance damages against an innocent infringer for purely compensatory reasons.

ments by courts recognizing that enhanced damages – where available – have the effect of compensating plaintiffs for losses not otherwise recoverable. Those cases do not support their request for a new rule that a district court has discretion to enhance damages without finding that punishment is warranted.

For example, to show that enhanced damages can be used for a compensatory purpose, the *Stryker* petitioners cite *Clark v. Wooster*, 119 U.S. 322 (1886). But *Clark* does not help them. That case recognized the "general rule in patent causes" that "established license fees are the best measure of damages that can be used." *Id.* at 326. The Court then went on to add:

> There may be damages beyond this, such as the expense and trouble the plaintiff has been put to by the defendant, and any special inconvenience he has suffered from the wrongful acts of the defendant; but these are more properly the subjects of allowance by the court under the authority given to it to increase the damages.

Id. To begin with, there were no enhanced damages at issue in *Clark*. The Court was merely affirming an actual damages award based on license fees. *See id.* at 324. To the extent the Court addressed the enhanced-damages standard in dictum, its reference to the "wrongful acts of the defendant" suggests that it had in mind the sort of culpable conduct described in *Seymour*. Run-of-the-mill patent infringement is a strict-liability tort that, although actionable, is not "wrongful" in the ordinary meaning of that term. Finally, the Court's reference to the plaintiff's "expense and trouble" most naturally refers to attorneys' fees, now reimbursable under a separate statutory provision, *see* 35 U.S.C. § 285. If the expense and trouble

of litigation had ever been recognized as a separate basis for enhancing damages, the provision of express authority to award attorneys' fees would undermine that rationale.

Day v. Woodworth, 54 U.S. (13 How.) 363, 371 (1852), and *Teese v. Huntingdon*, 64 U.S. (23 How.) 2 (1860), on which petitioners rely, *see* Halo Br. 15; Stryker Br. 30-31 n.5, are even less helpful to them. *Day* was a trespass case that referred to patent damages in passing, *see* 54 U.S. (13 How.) at 372, and nowhere suggested that courts could enhance damages where the defendant was not at fault. To the contrary, the *Day* Court's discussion of punitive damages drew a specific connection between "wanton and malicious[] or gross and outrageous" conduct by the defendant and a court's traditional ability to award damages "by way of punishment or example." *Id.* at 371. *Teese*, a patent case, held only that evidence of the plaintiff's attorneys' fees had properly been kept from the jury. *See* 64 U.S. (23 How.) at 8-9. Like *Clark*, it observed that enhanced damages could have the effect of compensating a patent holder for "unnecessary expense and injury," *id.* at 9, but did not state that such compensation was available from an innocent (or even negligent) defendant.

In addition, to the extent that some nineteenth-century authorities viewed enhanced damages as appropriately serving compensatory purposes, that does not weigh against viewing such damages as purely punitive under § 284. As this Court recognized in *Cooper Industries v. Leatherman Tool Group, Inc.*, there was a practice that lasted "[u]ntil well into the 19th century" of using "punitive damages to compensate for intangible injuries," which could not otherwise be redressed under the "narrow conception of

compensatory damages prevalent at the time." 532 U.S. 424, 437 n.11 (2001). That blurring of the lines did not outlast the nineteenth century. *See Exxon Shipping Co. v. Baker*, 554 U.S. 471, 492 (2008) (quoting treatise describing the "'almost total eclipse of the compensatory function' in the decades following the 1830s").

By 1952, when Congress passed the current version of § 284, it would have agreed with the "consensus today that punitives are aimed not at compensation but principally at retribution and deterring harmful conduct." *Id.* at 492-93. It also had before it no judicial decisions that had applied the existing enhanced-damages provision, as interpreted by *Seymour*, to permit enhancement for merely compensatory purposes. The only appropriate conclusion is that Congress intended the enhanced-damages provision in § 284 to reaffirm district courts' existing authority to punish wrongful conduct.

II. PUNISHMENT FOR PATENT INFRINGEMENT REQUIRES THE KNOWING OR RECKLESS VIOLATION OF AN OBJECTIVELY CLEAR LEGAL DUTY

A. Basic Principles and Established Practice Show the Need for an Objectively Clear Line Before Imposing Punishment

Because enhanced damages are meant to punish wrongdoing, the conduct that will trigger them must be clearly defined. As Justice Holmes said in the context of criminal theft, "it is reasonable that a fair warning should be given to the world[,] in language that the common world will understand, of what the law intends to do if a certain line is passed. To make the warning fair, so far as possible the line should be clear." *McBoyle v. United States*, 283 U.S. 25, 27

(1931);[14] *see also FCC v. Fox Television Stations, Inc.*, 132 S. Ct. 2307, 2317 (2012) (explaining the "fundamental principle in our legal system that laws which regulate persons or entities must give fair notice of conduct that is forbidden or required"); *BMW of N. Am., Inc. v. Gore*, 517 U.S. 559, 574 (1996) ("Elementary notions of fairness enshrined in our constitutional jurisprudence dictate that a person receive fair notice" about "the conduct that will subject him to punishment "); *cf. Screws v. United States*, 325 U.S. 91, 103 (1945) (plurality opinion) ("The constitutional requirement that a criminal statute be definite serves a high function."). The line whose crossing triggers punishment must be clear and objectively knowable not only for fairness but also because the threat of punishment in a neighborhood of fuzzy lines will deter legal, beneficial conduct. *Cf. United Carbon Co. v. Binney & Smith Co.*, 317 U.S. 228, 236 (1942) ("A zone of uncertainty which enterprise and experimentation may enter only at the risk of infringement claims would discourage invention only a little less than unequivocal foreclosure of the field.").

For these reasons, in cases involving all kinds of intellectual property and in other diverse statutory

---

[14] The facts of *McBoyle* itself bear some resemblance to a patent case: McBoyle had transported a stolen airplane in interstate commerce, and the question before the Court was whether he had violated a criminal statute that prohibited the transportation of a "'motor vehicle,'" defined to include "'an automobile, automobile truck, automobile wagon, motor cycle, or any other self-propelled vehicle not designed for running on rails.'" 283 U.S. at 26 (quoting Act of October 29, 1919, ch. 89, § 2 , 41 Stat. 324, 324, then codified at 18 U.S.C. § 408). Determining whether an airplane is a "motor vehicle" is not unlike determining whether broad claim language covers new machines unlike those listed in the narrow patent specification.

and regulatory contexts, courts have often required a showing that a defendant recklessly disregarded an objectively known or obvious risk of violation before finding punishable willfulness. Across a range of modern statutory regimes, willfulness has been defined to mean that a party "either knew or showed reckless disregard for the matter of whether its conduct was prohibited by the statute." *McLaughlin v. Richland Shoe Co.*, 486 U.S. 128, 133 (1988) (discussing willful violations under Fair Labor Standards Act, Equal Pay Act, and other federal statutes). "While 'the term recklessness is not self-defining,' the common law has generally understood it in the sphere of civil liability as conduct violating an objective standard: action entailing 'an unjustifiably high risk of harm that is either known or so obvious that it should be known.'" *Safeco*, 551 U.S. at 68 (quoting *Farmer v. Brennan*, 511 U.S. 825, 836 (1994)).

In *Safeco*, this Court held that violations in failing to provide notices under the Fair Credit Reporting Act, Pub. L. No. 91-508, 84 Stat. 1114, based on "reckless disregard of statutory duty," are not punished as willful absent crossing an objectively clear line. *Id.* at 56-57 The Court explained that "[i]t is th[e] high risk of harm, *objectively assessed*, that is the essence of recklessness at common law." *Id.* at 69 (emphasis added; citing W. Keeton, et al., *Prosser and Keeton on Law of Torts* § 34, at 213 (5th ed. 1984)). "There being no indication that Congress had something different in mind, we have no reason to deviate from the common law understanding in applying the statute." *Id.*

In *Seagate*, the Federal Circuit held that a finding of willfulness required "at least a showing of objective recklessness," and adopted *Safeco*'s definition of

recklessness, requiring that "the infringer acted despite an objectively high likelihood that its actions constituted infringement of a valid patent" as a threshold inquiry. 497 F.3d at 1371. That interpretation of *Safeco* (and of the common law principles on which *Safeco* itself drew) finds support both in historical patent cases and in other areas of the law, including other intellectual property regimes.

1. Courts Do Not Punish Infringers in Objectively Close Cases

Courts have long considered an objectively reasonable defense to patent infringement – a "close case" – incompatible with the finding of willfulness that must precede imposition of enhanced damages. In particular, merely knowing of the patent's existence is not enough to trigger enhanced damages, because of uncertainty about patent claim scope, about whether particular acts constitute infringement, and about whether the patent is valid. It is not wrongful conduct, but beneficial and encouraged, to "design around" an existing patent by searching for a non-infringing way to solve the same problem.[15] It is likewise socially valuable to test an existing patent based on reasonable arguments that it is invalid.[16] Only when the risk of infringing a valid patent is so objectively high as to be known or obvious can an infringer be punished for willful infringement.

---

[15] *See, e.g., State Indus. v. A.O. Smith Corp.*, 751 F.2d 1226, 1236 (Fed. Cir. 1985) (incentive "to 'design around' a competitor's products, even when they are patented," is "[o]ne of the benefits of a patent system" and "should not be discouraged by punitive damage awards"); U.S. Br. 19 n.16.

[16] *See, e.g., Blonder-Tongue Labs., Inc. v. University of Illinois Found.*, 402 U.S. 313, 344 (1971) (policy of "encourag[ing] authoritative testing of patent validity"); U.S. Br. 21 n.18.

Judge Learned Hand's opinion in *Consolidated Rubber* illustrates this approach. Judge Hand expressed considerable frustration with the conduct of the defendants, writing that their "whole conduct ha[d] shown that [they] sought by every device to infringe the patent-in-suit with impunity" and criticizing one for "the deviousness throughout of its persistent effort to suck the value from the invention and not pay the price." 226 F. at 465. Nevertheless, he carefully examined the defendants' legal justifications for their conduct and compared them to developing case law over the period of infringement. For conduct during the time when "the validity of the patent remained open to honest question," *id.* at 464, he declined to impose enhanced damages. Only for conduct after a change in controlling precedent, by which point "every sensible man must have seen" that defendant's position was "not within the real meaning" of the case on which they relied, *id.* at 465, did he increase damages. Nothing in Judge Hand's opinion suggests that the subjective intent behind the defendants' conduct had changed. What differed – and what moved him to enhance damages for one period but not another – was the objective strength of their defense.

Other courts reached the same conclusion from the late nineteenth century onward, declining to increase damages where a defendant had an objectively plausible argument that the patent was invalid or not infringed. *See, e.g.*, *Welling*, 35 F. at 304 (declining to increase damages where the defendant "was justified in pressing his views upon the attention of the master and the court"; "[t]he mere fact that a defense is unsuccessful does not warrant the court in punishing the defendant for interposing it" and contesting "de-

batable ground"); *Toledo Computing Scale*, 178 F at 567 (declining to increase damages after a patent reissue because "validity and novelty were debatable questions, and defendant undoubtedly considered the reissue an invalid one, which it might treat with contempt"); *Rockwood v. General Fire Extinguisher Co.*, 37 F.2d 62, 66 (2d Cir. 1930) (reversing an award of punitive damages where the "validity of the patent and its infringement was open to honest doubt"); *Smith v. Prior*, 22 F. Cas. 629, 632 (C.C.D. Cal. 1873) (declining to increase damages "in view of the fact that there is reasonable ground of contest between these parties").

2. Similar Objective Tests for Willfulness Govern Other Areas of the Law

The Federal Circuit's use of *Safeco* as the standard for willfulness in patent law is in harmony with decisions of other circuits that have looked to *Safeco* as the test for willfulness under other statutory and regulatory regimes. Further, decisions of other circuits have read *Safeco* (as *Seagate* did) to stand for the proposition that an objectively reasonable defense to a claim of statutory violation bars punishment for willfulness, without any need for inquiry into a defendant's subjective mental state.

Trademark: Section 35(a) of the Lanham Act, 15 U.S.C. § 1117(a), authorizes district courts to enhance damages for trademark infringement using language similar to the language of § 284 at issue here.[17] Although § 35(a) does not contain the word "willful," many courts have nevertheless treated a

---

[17] *See* 15 U.S.C. § 1117(a) ("In assessing damages the court may enter judgment, according to the circumstances of the case, for any sum above the amount found as actual damages, not exceeding three times such amount.").

willfulness test as a "gloss or screen in deciding what remedies to provide" under that section. *Fishman Transducers, Inc. v. Paul*, 684 F.3d 187, 191 (1st Cir. 2012); *accord La Quinta Corp. v. Heartland Props. LLC*, 603 F.3d 327, 345 (6th Cir. 2010). In explaining that standard in *Fishman Transducers*, Judge Boudin adopted *Safeco*'s definition of willfulness as "conscious awareness of wrongdoing by the defendant or at least conduct deemed 'objectively reckless' measured against standards of reasonable behavior," and cited *Seagate* as according with that general principle. 684 F.3d at 191 & n.4.

Copyright: "[W]illful copyright infringement encompasses reckless disregard of the possibility that one's actions are infringing a copyright." *Yellow Pages Photos, Inc. v. Ziplocal, LP*, 795 F.3d 1255, 1271-72 (11th Cir. 2015) (collecting cases, and citing *Safeco*); *see also Olem Shoe Corp. v. Washington Shoe Corp.*, 591 F. App'x 873, 877-78 (11th Cir. 2015) (expressly endorsing *Seagate*'s two-step recklessness inquiry for copyright cases).

Fair and Accurate Credit Transactions Act:[18] Penalties under FACTA "depend on a violation being 'willful.'" *Van Straaten v. Shell Oil Prods. Co.*, 678 F.3d 486, 489 (7th Cir. 2012) (Easterbrook, J.) (quoting 15 U.S.C. § 1681n). Under *Safeco*, "only a reading that is 'objectively unreasonable' can be deemed a 'willful' violation." *Id.* *Van Straaten* accordingly rejected willfulness on appeal as a matter of law on review of a motion for summary judgment. *See id.* at 490-91; *see also id.* at 491 (Cudahy, J., concurring) ("According to *Safeco*, at least with unclear text and in the absence of authoritative guidance or case law,

---

[18] Pub. L. No. 108-159, 117 Stat. 1952 (2003) ("FACTA").

the appropriate and *sole* measure of recklessness is objective reasonableness.") (emphasis added).

Uniformed Services Employment and Reemployment Rights Act:[19] "[T]he term 'willful' as used in § 4323(d)(1)(C) of USERRA refers to a knowing violation or action taken in reckless disregard of the obligations imposed by USERRA," which means "'something more than merely showing that an employer knew about the [statute] and its potential applicability in the workplace.'" *Fryer v. A.S.A.P. Fire & Safety Corp.*, 658 F.3d 85, 91-92 (1st Cir. 2011) (citing *Safeco* and cases applying it).[20]

Thus, where a statute imposes liability or increases damages for willfulness – either expressly, *e.g.*, 17 U.S.C. § 504(c)(2) (copyright), or by longstanding judicial interpretation, *e.g.*, *Fishman*, 684 F.3d at 191 (trademark) – courts have treated *Safeco* as the authoritative test. Those cases are in accord with pre-*Safeco* authority treating objective recklessness as a minimum standard for punishment in other statutory contexts.[21] In sum, this is not a situation in which

---

[19] Pub. L. No. 103-353, 108 Stat. 3149 (1994) ("USERRA").

[20] *Safeco* has also been employed as a guide to whether an individual acts with "'reckless indifference' to truth or falsity," as necessary for liability under § 5 of the Federal Trade Commission Act. *FTC v. Network Servs. Depot, Inc.*, 617 F.3d 1127, 1140 & n.12 (9th Cir. 2010) (quoting *Safeco*'s definition of reckless conduct as "conduct violating an objective standard").

[21] *See, e.g.*, *SEC v. Steadman*, 967 F.2d 636, 641-42 (D.C. Cir. 1992) (holding that "the kind of recklessness required" to establish a securities violation involves "'a danger of misleading buyers or sellers that is either known to the defendant or is so obvious that the actor must have been aware of it'"); *Saba v. Compagnie Nationale Air France*, 78 F.3d 664, 668-69 (D.C. Cir. 1996) (defining reckless disregard and willful misconduct under the Warsaw Convention as "'extreme recklessness'" that "'pre-

the Federal Circuit has created a patent-specific exception to a general federal rule. *Cf. Teva Pharm. USA, Inc. v. Sandoz, Inc.*, 135 S. Ct. 831, 837 (2015) (rejecting an attempt to create an exception to Federal Rule of Civil Procedure 52(a)). Instead, the Federal Circuit has properly applied general principles set forth by this Court in harmony with other areas of the law and with the regional circuits. That careful approach deserves this Court's approval.

B. An Objectively Reasonable Trial Defense Should Bar Enhanced Damages

Enhanced damages are inappropriate where an infringer has an objectively reasonable defense of noninfringement or invalidity, whether that defense was formulated at the time of infringement or at the time of trial. Petitioners and the Solicitor General seek to shift the focus solely to the defendant's mental state, arguing that even an objectively reasonable defense cannot defeat enhanced damages unless the defendant had that particular defense in mind when it infringed. Halo Br. 24-25; U.S. Br. 28-31. But such a rule would be inconsistent with *Safeco*; with 35 U.S.C. § 298, enacted as part of the 2011 Leahy-Smith America Invents Act, Pub. L. No. 112-29, § 17, 125 Stat. 284, 329; and with the need for meaningful appellate review of enhanced-damages awards.

1. *Safeco* Rejected Inquiry Into the Mental State of Defendants with Objectively Reasonable Defenses

Safeco expressly rejected the argument that one of the respondents in that case (Safeco) could be pun-

---

sents a danger that is either known to the defendant or is so obvious that the actor must have been aware of it'"; discussing debates over whether the Convention also requires subjective knowledge).

ished for willfulness based on "evidence of subjective bad faith" even though Safeco's "reading of the statute" was "objectively reasonable." 551 U.S. at 70 n.20 (stating that such a rule would "defy history and current thinking"). Petitioners and the Solicitor General assert that the Court's statement "is best understood to refer to a defendant's understanding of the applicable legal requirement at the time of the misconduct." U.S. Br. 30 n.23 (emphasis omitted); *see* Stryker Br. 49. On its face, this Court's opinion in *Safeco* will hardly bear that reading: it focused on whether Safeco's reading of the statute had "a foundation in the statutory text," and on the district court's initial "rul[ing] in Safeco's favor," without suggesting that the company's mental state at the time of the statutory violation was at all relevant. 551 U.S. at 69-70.

A closer look at the question presented in *Safeco* removes any doubt. The district court in *Safeco* had found that the company had not violated the statute at all. The Ninth Circuit disagreed, finding a statutory violation.[22] It did not resolve the question of willfulness: instead, it remanded for the district court to take "specific evidence as to how the company's decision was reached, including the testimony of the company's executives and counsel." *Reynolds*, 435 F.3d at 1099. After this Court granted certiorari, the plaintiffs argued that there had not yet been "review by any court of the facts concerning [Safeco's] state of

---

[22] *See Reynolds v. Hartford Fin. Servs. Grp.*, 435 F.3d 1081, 1090-93 (9th Cir. 2006), *rev'd sub nom. Safeco*, *supra*; *Spano v. Safeco Corp.*, 140 F App'x 746, 747 (9th Cir. 2005), *rev'd sub nom. Safeco*, *supra*. *Reynolds* was the lead Ninth Circuit case. *Spano* followed it (referring to it as "*Edo*," a consolidated case).

mind when [it] violated the statute," and urged this Court to remand so those facts could be determined.[23]

This Court instead held that there was "no need to remand for factual development" as to Safeco because "Safeco's misreading of the statute was not reckless." 551 U.S. at 71. It could not have been referring to Safeco's "understanding at the time of the misconduct," U.S. Br. 30 n.23, because no evidence of that understanding had ever been developed. It was instead squarely rejecting the Ninth Circuit's position that such facts were necessary. Notably, Safeco's prevailing position on this point was supported by the United States, which argued that a "purely legal inquiry into the objective recklessness of [a] defendant's failure to comply with the [statute] can, and generally should[] be undertaken at an early stage [of] the case."[24] If the inquiry turned on a defendant's past beliefs about the law, as the United States now suggests, it would be neither purely legal nor subject to early resolution.

Safeco also shows the error in petitioners' and the Solicitor General's contention that the Federal Circuit erred by focusing on recklessness rather than on knowing infringement. Halo Br. 23; Stryker Br. 46-47; U.S. Br. 28. There is no doubt that a willfulness

---

[23] Resps. Joint Br. 2, *Safeco*, Nos. 06-84, et al. Safeco did not dispute that there was no evidence of its mental state. It argued that the alleged willfulness of its conduct was "an objective issue that turns purely on the text of [the statute] and existing law," leaving no need for "further factual development." Pet'rs Reply Br. 19, *Safeco*, Nos. 06-84, et al.

[24] U.S. Br. 23, *Safeco*, Nos. 06-84 et al. ("Only if the defendant's failure to comply with the law was objectively reckless would it become necessary for a court to probe, as the court of appeals invited here, the defendant's subjective good faith.") (citation omitted).

standard permits punishment for knowing violation of a clear legal norm. But that does not establish that the violation of an unclear norm counts as "knowing" misconduct that a court may punish. By its terms and on its facts, *Safeco* stands for the proposition that, whatever a defendant's beliefs or intent may have been at the time of challenged conduct, if that defendant has an objectively reasonable defense that it presents in court, it cannot be "treat[ed] as a knowing or reckless violator." 551 U.S. at 70 n.20.

2. Section 298 Forbids Punishing an Infringer for Failure To Obtain a Legal Opinion in Advance

Congress has also codified a very significant part of *Seagate*: the Federal Circuit's rule relieving accused patent infringers of the burden of developing their defenses prior to being sued in order to ensure they would not be punished for willful infringement. That codification, which was part of the America Invents Act, provides:

> The failure of an infringer to obtain the advice of counsel with respect to any allegedly infringed patent, or the failure of the infringer to present such advice to the court or jury, may not be used to prove that the accused infringer willfully infringed the patent.

35 U.S.C. § 298. That is the result petitioners and the Solicitor General seek to achieve here: to use the failure to retain counsel to formulate a defense at the time of infringement to establish willfulness at trial, by disregarding the same reasonable defense when presented by trial counsel.

Technology companies, auto makers, and retailers receive many demand letters from patent holders. If objectively reasonable defenses are available, but a

company does not hire a lawyer to develop those defenses at the time of the demand, petitioners would have district courts treat the defendant as "no less culpable" on the basis of that defense. Stryker Br. 49; *see also* U.S. Br. 25. That approach would put the recipients of demand letters back in the bind that § 298 intended to remove. Those companies would have to acquiesce to the patent holder's demand, obtain an opinion of counsel immediately, or take the chance of a later willfulness finding.

Frequently, commissioning a legal opinion immediately after receiving a demand letter does not make sense, as both § 298 and the Federal Circuit's rule recognize. It is common in *amici*'s industries for a demand letter's recipient to deem the demand not credible on its face, and continue using the allegedly patented technology. In the vast majority of such cases, either validity or infringement is "open to honest question," *Consolidated Rubber*, 226 F. at 464, so that the defendant could have developed an objectively reasonable defense by retaining counsel for an opinion. Petitioners' argument thus amounts to a request to revive the "massive market in independent legal opinions," U.S. Br. 22 n.20, that existed before *Seagate* and that § 298 was expressly intended to eliminate.

3. Objective Reasonableness Is Important To Enable Meaningful Appellate Review of Enhanced Damage Awards

Respondents correctly observe that these cases do not present the question of the appellate standard of review for a district court willfulness finding. *See* Pulse Br. 10 & n.2 (citing Judge Taranto's concurrence below); Zimmer Br. 51-52. Nevertheless, an additional advantage of an objective-reasonableness

test is that it enables meaningful appellate review of enhanced-damages awards. Just as the defendants in *Safeco* obtained review of the willfulness finding against them as a matter of law, *see supra* pp. 27-29, and as other defendants have done in other cases, *see, e.g.*, *Van Straaten*, 678 F.3d at 490-91, patent defendants should receive de novo review before they are punished for violating unclear laws. *See* Google Br. 30-31 (explaining why appellate review of enhanced-damages awards is important).

C. At a Minimum, Objective Reasonableness Is Strong Evidence That Enhanced Damages Are Inappropriate

For the reasons given, this Court should preserve *Safeco*'s rule that an objectively reasonable defense at trial bars an award of enhanced damages in the patent context. If this Court declines to do so, however, it should nevertheless make two important points clear. *First*, the objective reasonableness of a defendant's position should always be strong evidence that enhanced damages are inappropriate and should require a special showing of culpability before the district court can award such damages. *Second*, a defendant should be permitted to rely on legal arguments regardless of when they were formulated.

To be clear, the plaintiff in a patent case always has the burden of proving that enhanced damages are appropriate. But where the defendant presents an objectively reasonable defense, that burden should be especially demanding (if not insurmountable). To overcome the powerful presumption against willful infringement that an "honest doubt" creates, *Rockwood*, 37 F.2d at 66, the district court should be required to identify on the record specific extraordinary circumstances that establish "wanton and mali-

cious pira[cy]," *Seymour*, 57 U.S. (16 How.) at 488, or the moral equivalent.

In addition, a defendant's mere failure to investigate a patent claim more thoroughly and commission a legal opinion before beginning or continuing to create and produce should never alone justify enhanced damages. That rule is necessary, at a minimum, to comply with Congress's mandate that a plaintiff can never establish willful infringement by relying on the defendant's "failure to obtain the advice of counsel." 35 U.S.C. § 298. *See supra* pp. 29-30.

Courts have long recognized that, just as the mere existence of a patent does not establish liability, a defendant's knowledge of a patent does not establish willful infringement worthy of punishment. Where a defendant has an objectively reasonable defense to liability, that should at least be a compelling indicator that enhanced damages are inappropriate.

CONCLUSION

The judgments of the court of appeals should be affirmed.

Respectfully submitted,

ANTHONY PETERMAN
MICHELE K. CONNORS
DELL INC.
One Dell Way
Round Rock, TX 78682
(512) 728-3186

CRAIG E. DAVIS
SR. LITIGATION COUNSEL
HP INC.
1501 Page Mill Road
Palo Alto, CA 94304
(650) 236-9259

BERNARD SHEK
SANDISK CORPORATION
951 SanDisk Drive
Milpitas, CA 95035
(408) 801-1000

JOHN THORNE
Counsel of Record
GREGORY G. RAPAWY
KELLOGG, HUBER, HANSEN,
TODD, EVANS & FIGEL,
P.L.L.C.
1615 M Street, N.W.
Suite 400
Washington, D.C. 20036
(202) 326-7900
(jthorne@khhte.com)

ALLEN SOKAL
BAKERHOSTETLER
1050 Connecticut Ave., N.W.,
Suite 1100
Washington, D.C. 20036
(202) 861-1500

January 20, 2016

ADDENDUM

Amici curiae

Applied Materials, Inc.
Association of Global Automakers, Inc.
BJ's Wholesale Club, Inc.
Computer & Communications Industry Association
CTIA – The Wireless Association
Dell Inc.
Facebook, Inc.
HP Inc.
HTC Corporation
The Internet Association
J. C. Penney Corporation, Inc.
Limelight Networks, Inc.
MGA Entertainment, Inc.
Micron Technology, Inc.
National Retail Federation
QVC, Inc.
Rackspace
Red Hat, Inc.
Samsung Electronics Co., Ltd.
SanDisk Corporation
SAS Institute Inc.
Varian Medical Systems, Inc.
VIZIO, Inc.
Xerox Corporation

Nos. 14-1513 & 14-1520

IN THE

Supreme Court of the United States

HALO ELECTRONICS, INC.,

Petitioner,

v.

PULSE ELECTRONICS, INC., ET AL.,

Respondents.

STRYKER CORPORATION, ET AL.,

Petitioners,

v.

ZIMMER, INC., ET AL.,

Respondents.

On Writs Of Certiorari
To The United States Court Of Appeals
For The Federal Circuit

BRIEF OF EMC CORPORATION AS *AMICUS CURIAE* IN SUPPORT OF RESPONDENTS

PAUL T. DACIER
KRISHNENDU GUPTA
WILLIAM R. CLARK
THOMAS A. BROWN
EMC CORPORATION
176 South Street
Hopkinton, MA 01748
(508) 293-6654

THOMAS G. HUNGAR
Counsel of Record
MATTHEW D. MCGILL
GIBSON, DUNN & CRUTCHER LLP
1050 Connecticut Avenue, N.W.
Washington, DC 20036
(202) 955-8500
thungar@gibsondunn.com

ALEXANDER N. HARRIS
GIBSON, DUNN & CRUTCHER LLP
555 Mission Street, Suite 3000
San Francisco, CA 94105
(415) 393-8200

Counsel for Amicus Curiae

TABLE OF CONTENTS

Page

INTEREST OF *AMICUS CURIAE* 1

SUMMARY OF THE ARGUMENT 3

ARGUMENT 6

I. PERMITTING AN AWARD OF ENHANCED DAMAGES WHENEVER A COURT CONCLUDES THAT SUCH AN AWARD IS JUSTIFIED BY WHATEVER CIRCUMSTANCES IT IDENTIFIES WOULD MASSIVELY INCREASE THE POWER OF NON-PRACTICING PROFESSIONAL PATENT LITIGANTS 7

A. Historically, A Permissive Enhanced Damages Regime Has Benefited Non-Practicing Entities And Harmed Innovation 9

B. *Seagate*'s Threshold Requirement Of Objective Recklessness Mitigated The Problems Caused By The Federal Circuit's Former Permissive Regime 12

C. Re-introducing A Permissive Enhanced Damages Regime Today Would Greatly Enhance The Power Of Non-Practicing Entities To Stifle Practicing Companies From Innovating 13

1. Petitioners' Approach Would Aggravate Non-Practicing Entities' Forum-Shopping Practices 14

2. Petitioners' Approach Also Would Enable Non-Practicing Entities To Threaten Expensive And Unpredictable Trials On Enhanced Damages 16

II. SECTION 284 REQUIRES AT LEAST A DETERMINATION OF OBJECTIVE RECKLESSNESS, MADE BY THE COURT AND REVIEWED DE NOVO 19

A. Because Enhanced Damages Under Section 284 Are Punitive, Section 284 Requires At Least Proof Of Objective Recklessness 20

1. Historically, Enhanced Damages Have Been Limited To Cases Of Willful Infringement 21

2. Even If Enhanced Damages Were Appropriate In Other Cases, Such Damages Are Punitive In Nature 22

3. Punitive Damages Require Proof Of Objective Recklessness 24

B. Courts Must Grant Summary Judgment Precluding Enhanced Damages Where Defendants Take Reasonable Noninfringement Or Invalidity Positions 26

C. When Summary Judgment Is Not Available, The Court Should Make All Factual And Discretionary Determinations Relevant To Enhanced Damages That Remain After The Jury's Award Of Compensatory Damages 28

1. Section 284 Explicitly States That The Court Shall Decide Whether To Enhance Damages After The Jury Awards Compensatory Damages 28

2. Congress's Allocation Of Responsibility Is Not Unconstitutional 31

D. Due Process And Common-Law Limitations On Punitive Awards Constrain Enhanced Damages Under Section 284 33

E. A Court's Determination To Award Enhanced Damages Must Be Reviewed De Novo 35

CONCLUSION 38

TABLE OF AUTHORITIES

Page(s)

Cases

Aro Mfg. Co. v. *Convertible Top Replacement Co.*, 377 U.S. 476 (1964) 23

Bard Peripheral Vascular, Inc. v. *WL Gore & Assocs.*, 682 F.3d 1003 (Fed. Cir. 2012) 20, 28, 30, 33, 37

Birdsall v. *Coolidge*, 93 U.S. 64 (1876) 37

Bonito Boats, Inc. v. *Thunder Craft Boats, Inc.*, 489 U.S. 141 (1989) 7, 11, 12

Celotex Corp. v. *Catrett*, 477 U.S. 317 (1986) 26

Cincinnati Siemens-Lungren Gas Illuminating Co. v. *W. Siemens-Lungren Co.*, 152 U.S. 200 (1894) 21

Commil USA, LLC v. *Cisco Sys., Inc.*, 135 S. Ct. 1920 (2015) 7, 8, 9, 18, 31

Cooper Indus., Inc. v. *Leatherman Tool Grp., Inc.*, 532 U.S. 424 (2001) 36

Corning v. *Burden*, 56 U.S. 252 (1854) 21

Cortelyou v. *Charles Eneu Johnson & Co.*, 207 U.S. 196 (1907) 17

Day v. *Woodworth*,
54 U.S. 363 (1852).....29, 30, 32

Dowling v. *United States*,
473 U.S. 207 (1985).....21

eBay Inc. v. *MercExchange, L.L.C.*,
547 U.S. 388 (2006).....7

Exxon Shipping Co. v. *Baker*,
554 U.S. 471 (2008).....35, 36

Fla. Prepaid Postsecondary Educ. Expense Bd.
v. *Coll. Sav. Bank*,
527 U.S. 627 (1999).....23

Livingston v. *Woodworth*,
56 U.S. 546 (1854).....21

Markman v. *Westview Instruments, Inc.*,
517 U.S. 370 (1996).....29, 32

Miller v. *Fenton*,
474 U.S. 104 (1985).....38

Root v. *Ry. Co.*,
105 U.S. 189 (1882).....22

Safeco Ins. Co. of Am. v. *Burr*,
551 U.S. 47 (2007).....21, 22, 25

In re Seagate Tech., LLC,
497 F.3d 1360 (Fed. Cir. 2007)..1, 4, 12, 18, 21, 22

Seymour v. *McCormick*,
57 U.S. 480 (1854).....1, 21, 22, 30, 32, 33

Smith v. *Wade*,
461 U.S. 30 (1983).....24

State Farm Mut. Auto. Ins. Co. v. *Campbell*,
538 U.S. 408 (2003).....33, 34, 35

Teese v. *Huntingdon*,
64 U.S. 2 (1860) 30, 32

Teva Pharm. USA, Inc. v. *Sandoz, Inc.*,
135 S. Ct. 831 (2015) 29

Tilghman v. *Proctor*,
125 U.S. 136 (1888) 22, 33

Topliff v. *Topliff*,
145 U.S. 156 (1892) 37

Underwater Devices Inc. v. *Morrison-Knudsen Co.*,
717 F.2d 1380 (Fed. Cir. 1983) 9

United States v. *Mead Corp.*,
533 U.S. 218 (2001) 14

Veritas Operating Corp. v. *Microsoft Corp.*,
562 F. Supp. 2d 1141 (W.D. Wash. 2008) 17

Wilden Pump & Eng'g Co. v. *Pressed & Welded Prods. Co.*,
655 F.2d 984 (9th Cir. 1981) 25

Constitutional Provision

U.S. Const. art. I, § 8, cl. 8 7

Statutes

28 U.S.C. § 1295(a)(1) 36

28 U.S.C. § 1400(b) 14

35 U.S.C. § 284 ..... 2, 4, 23, 29, 30, 33, 35

Other Authorities

Jonas Anderson, *Congress as a Catalyst of Patent Reform at the Federal Circuit*, 63 Am. U. L. Rev. 961 (2014) 14

J. Jonas Anderson, *Court Competition for Patent Cases*, 163 U. Pa. L. Rev. 631 (2015) 26

Jeff Bounds, *Patent Suits Flood East Texas Court*, Dallas Morning News (Dec. 13, 2015) 15

Christopher A. Cotropia & Mark A. Lemley, *Copying in Patent Law*, 87 N.C. L. Rev. 1421 (2009) 34

Dennis Crouch, *The Number of U.S. Patents in Force*, PatentlyO (Oct. 25, 2014) 25

H.I. Dutton, *The Patent System and Inventive Activity During the Industrial Revolution, 1750-1852* (1984) 32

Fed. Trade Comm'n, *The Evolving IP Marketplace* (2011) 23, 24, 26, 31

Fed. Trade Comm'n, *To Promote Innovation: The Proper Balance of Competition and Patent Law and Policy* (2003) 11, 28

Brian Ferguson, Seagate *Equals Sea Change: The Federal Circuit Establishes a New Test for Proving Willful Infringement and Preserves the Sanctity of the Attorney-Client Privilege*, 24 Santa Clara Computer & High Tech. L.J. 167 (2007) 9, 10, 11, 19, 27

Brian C. Howard, Lex Machina 2014 Patent Litigation Year in Review (2015).....15

Daniel Klerman & Greg Reilly, *Forum Selling*, 2015 S. Cal. L. Rev. (forthcoming).....15

Christopher Ryan Lanks, In re Seagate: *Effects and Future Development of Willful Patent Infringement*, 111 W. Va. L. Rev. 607 (2009) 10, 12, 13

Joe Mullin, *Trolls Made 2015 One of the Biggest Years Ever for Patent Lawsuits*, ArsTechnica (Jan. 5, 2016).....15

John B. Pegram, *The Willful Patent Infringement Dilemma and the 7th Amendment*, 86 J. Pat. & Trademark Off. Soc'y 271 (2004).....32, 33

Kevin Raudebaugh, *Willful Infringement After* Seagate*: How the Willfulness Standard Has Changed and What Attorneys Should Know About It*, 5 Shidler J. L. Com. & Tech. 20 (2009). 11, 13

RPX, *2015 NPE Activity Highlights* (2016).....13, 16

Christopher B. Seaman, *Willful Patent Infringement and Enhanced Damages After* In re Seagate*: An Empirical Study*, 97 Iowa L. Rev. 417 (2012) 10, 15, 27, 31, 33

Daniel P. Sullivan, *Must the Jury Reach a Verdict? The Constitutionality of Eliminating Juries in Patent Trials by Creating an Article I Tribunal*, 7 J. Marshall Rev. Intell. Prop. L. 754 (2008).....32

Zelin Yang, *Damaging Royalties: An Overview of Reasonable Royalty Damages*, 29 Berkeley Tech. L.J. 647 (2014).....35

INTEREST OF *AMICUS CURIAE*[1]

Under this Court's precedents, enhanced patent damages always have been an extraordinary "vindictive or punitive" remedy reserved for "wanton or malicious" conduct. *Seymour* v. *McCormick*, 57 U.S. 480, 489 (1854). Although the Federal Circuit upheld enhanced damage awards violating these historical limits in the first quarter-century after its founding, in 2007 the court of appeals properly restored the rule that an award of "enhanced damages requires at least a showing of objective recklessness." *In re Seagate Tech., LLC*, 497 F.3d 1360, 1371 (Fed. Cir. 2007) (en banc). Petitioners now challenge this rule, which comports with this Court's treatment of punitive damages and willfulness in other areas of the law.

Amicus curiae is a leading technology company, and has a substantial interest in the correct resolution of the question presented. EMC's primary business is developing, making, and selling a wide variety of complex hardware and software data storage products that are used to store today's exploding volume of digital information. EMC owns over 5,100 United States patents and recognizes the importance of protecting valid intellectual property rights. But amicus frequently is targeted by litigants with opportunistic accusations of willful patent infringe-

---

[1] Pursuant to Supreme Court Rule 37.6, counsel for amicus curiae states that no counsel for a party authored this brief in whole or in part, and no person or entity other than amicus curiae or its counsel made a monetary contribution to this brief's preparation or submission. All parties have consented to the filing of this brief.

ment, despite amicus's lack of knowledge that any valid patent has been infringed. And the constant drumbeat of suits threatening a costly litigation process ending with a potential jury verdict trebling gargantuan damages creates a significant impediment to its ability to engage and innovate in its lines of business.

Yet patentees (more often than not, so-called non-practicing entities) frequently assert patents whose application to the accused products is subject to serious doubt. In these circumstances, companies like amicus often offer a reasonable defense that, if the patent is construed narrowly but reasonably, the product does not infringe, and if the patent is construed broadly enough to reach the product, the patent is invalid. In these circumstances, and many others, companies thus are forced to defend against claims of infringement, even when they have a reasonable basis for concluding that they do not infringe a valid patent.

Companies should not be subjected to enhanced damages in these or similar situations where they have not acted objectively recklessly. When a patent can reasonably be construed as invalid or not infringed, but a court later rejects that reading, the defendant should be liable only for "damages adequate to compensate for the infringement." 35 U.S.C. § 284. Enhanced damages should be reserved for rare situations, not available in the mine-run of cases where parties present reasonable opposing views of an ambiguous patent.

SUMMARY OF THE ARGUMENT

Petitioners would permit sizeable compensatory damage awards to be trebled in an unconfined variety of cases. This Court should reject petitioners' attempt to remove the historical limits on enhanced patent damages. Enhanced damages should be available only when the defendant's conduct is objectively reckless; their availability should be determined by the court, either on summary judgment or following the infringement verdict; and they should be limited to amounts proportionate to the reprehensibility of the defendant's conduct.

I. A system that allows juries to enhance damages even when the defendant offers an objectively reasonable defense is a system that gives non-practicing entities a weapon with which to coerce unjustified settlements from the successful companies that power our economy.

A. Under the Federal Circuit's prior regime, where enhanced damages were available whenever the district court found that the circumstances warranted, patent plaintiffs took this invitation to enhance their power at the expense of innovative firms. Non-practicing entities would follow strategies to confer supposed knowledge of the patent and intent to infringe onto defendants—such as sending letters informing companies of patents or asserting patents cited in the lengthy prosecution histories of practicing companies' numerous patents. Even where defendants likely would succeed on the merits, patentees would then use the threat of a burdensome trial with a potentially ruinous jury award of compensatory and enhanced damages to coerce settlements.

B. The threshold requirement of objective recklessness restored in *In re Seagate Technology, LLC*, 497 F.3d 1360, 1371 (Fed. Cir. 2007) (en banc), has reined in the negative consequences that resulted from the Federal Circuit's prior permissive enhanced damages regime. It has done so without chilling patent enforcement, which has actually increased since *Seagate*.

C. Were the Court to follow petitioners' suggestion and allow courts to award enhanced damages without a determination of objective recklessness, the problems attendant to a permissive enhanced damages regime would dramatically worsen. Non-practicing entities would be reinvigorated in their use of dubious patents to pressure practicing companies into paying unjustified settlements to avoid the possibility of enhanced damages.

II. Section 284 does not permit this tactic. It requires, at a minimum, a court determination of objective recklessness to enhance damages.

A. Historically, enhanced damages generally have been available only in cases of willful infringement, which requires proof of objective recklessness. Even if enhanced damages were proper in the absence of willful infringement, they still are punitive in nature. When a plaintiff wins its patent case, it is entitled to "damages adequate to compensate for the infringement"—even if the infringement was accidental. 35 U.S.C. § 284 ¶ 1. Any "increase" of this award is necessarily punitive. *Id.* ¶ 2. Because Section 284 lacks guidance on when punitive patent damages are proper, this Court should fill the gap as

it has done in interpreting similarly terse statutes by requiring at least a finding of recklessness.

B. Defendants who present a noninfringement or invalidity position that is reasonable as a matter of law must be able to obtain summary judgment precluding an enhanced damages award. Yet most patent suits, especially those brought by non-practicing entities, are filed in courts unwilling to grant summary judgment even when defendants are entitled to it. This Court should remind lower courts of their obligations under Rule 56. That would reduce the power of non-practicing entities to exact tribute from practicing companies.

C. If enhancement properly survives summary judgment, then, after the jury makes a finding of infringement and awards compensatory damages, the court should decide enhanced damages, including any factual questions not resolved by the jury verdict on infringement, validity, and compensatory damages. That is the allocation of responsibility set by Congress, and it is not unconstitutional.

D. Where the court does decide to award enhanced damages, it must ensure that the award comports with the due-process and common-law limits on punitive damages. In all but the most extraordinary patent cases, such damages should be no greater than the compensatory award.

E. Finally, the court's determination that enhanced damages are available should be reviewed de novo by the court of appeals, which can best assess the defenses' objective reasonableness.

ARGUMENT

Enhanced damages under Section 284 are a punitive supplement to the compensatory damages to which successful plaintiffs are entitled. To the extent such enhanced damages are available under any circumstances other than willful infringement, they must nonetheless satisfy the constitutional, statutory, and common-law limits on punitive damages. Thus, enhanced damages should not be available absent proof of objective recklessness. And, where awarded, they should rarely exceed the compensatory award. Judges, rather than juries, should make all determinations justifying the award beyond those factual findings necessarily decided by the infringement verdict.

Were these principles universally observed, the power of non-practicing entities to coerce excessive settlements would be reduced. By contrast, if enhanced damages were available as readily as petitioners suggest, that result would greatly enhance the power of non-practicing entities. Shell companies whose only business activity is to sue successful innovative firms would be able to wreak even greater havoc on the patent system than they have done to date. If a non-practicing entity could reach a jury by pointing to a letter announcing its belief that the defendant infringes its patent or to a citation to that patent in the prosecution history of one of the defendant's patents—regardless of the reasonableness of the defenses—the inevitable outcome would be more meritless patent litigation, more runaway verdicts, and a greater drain on innovation.

I. PERMITTING AN AWARD OF ENHANCED DAMAGES WHENEVER A COURT CONCLUDES THAT SUCH AN AWARD IS JUSTIFIED BY WHATEVER CIRCUMSTANCES IT IDENTIFIES WOULD MASSIVELY INCREASE THE POWER OF NON-PRACTICING PROFESSIONAL PATENT LITIGANTS.

The Constitution grants Congress the power to issue "exclusive Right[s]" to "Inventors" in order to "promote the Progress of Science and useful Arts." U.S. Const. art. I, § 8, cl. 8. In recent years, however, "[a]n industry has developed in which firms use patents not as a basis for producing and selling goods but, instead, primarily for obtaining licensing fees." *eBay Inc.* v. *MercExchange, L.L.C.*, 547 U.S. 388, 396 (2006) (Kennedy, J., concurring). Such non-practicing entities frequently "use patents as a sword to go after defendants for money, even when their claims are frivolous." *Commil USA, LLC* v. *Cisco Sys., Inc.*, 135 S. Ct. 1920, 1930 (2015). These practices are transforming the patent system from a tool "to encourage innovation" (*Bonito Boats, Inc.* v. *Thunder Craft Boats, Inc.*, 489 U.S. 141, 146 (1989)) into a club that threatens innovative companies (*Commil*, 135 S. Ct. at 1930).

Just last Term, this Court warned that non-practicing entities often pursue their "tactic" of intimidation by sending "demand letters" to targeted practicing companies. *See Commil*, 135 S. Ct. at 1930. Such notice letters "assert vague claims of infringement," at most, without analysis showing that the defendant's product or activity meets the claim limitations. *Ibid.* (citation omitted). Indeed, in ami-

cus's experience, these letters often are *purposefully* vague, in an attempt to prevent the targeted company from seeking a declaratory judgment that the patent is not infringed or invalid. One goal of these letters is "to obtain payments that are based more on the costs of defending litigation than on the merit of the patent claims." *Ibid.* (citation omitted). They are often "sent very broadly and without prior investigation," in the hopes of gaining a quick licensing fee in lieu of litigation. *Ibid.* (citation omitted).

As wielded by non-practicing entities, however, notice letters also serve an even more pernicious purpose. If the target of the letter decides to take its chances in court, the non-practicing entity argues that the letter put the defendant on notice of the patentee's view that the defendant was committing patent infringement, and invites the jury to infer that the infringement was therefore willful and enhanced damages should be awarded.

Similarly, non-practicing entities also frequently elect to assert patents listed among the thousands inevitably cited during prosecution of a practicing company's patent applications, and then argue that the company had "knowledge" of that patent and its relevance.

The Federal Circuit reined in these tactics when it finally abandoned its former permissive regime for enhanced damages and restored the threshold requirement of objective recklessness. Yet abuse persists. Given the ubiquity of non-practicing entities and vague patents (especially in the technology sector) today, a new permissive regime would "impose a harmful tax on innovation" even greater than the

prior one. *Commil*, 135 S. Ct. at 1930 (quotation marks omitted).

A. Historically, A Permissive Enhanced Damages Regime Has Benefited Non-Practicing Entities And Harmed Innovation.

Experience has shown the harms that would result from a standard that makes enhanced damages available in a broad array of circumstances. Patent plaintiffs thrived, and innovation suffered, in the decades following *Underwater Devices Inc.* v. *Morrison-Knudsen Co.*, 717 F.2d 1380 (Fed. Cir. 1983). Decided shortly after the creation of the Federal Circuit, *Underwater Devices* had imposed upon any "potential infringer" with "actual notice of another's patent rights" an "affirmative duty to exercise due care to determine whether or not he is infringing." *Id.* at 1390. As one commentator explained, "perhaps the most alarming consequence of the duty of due care standard was that it had facilitated 'opportunities for abusive gamesmanship' by certain patentees." Brian Ferguson, Seagate *Equals Sea Change: The Federal Circuit Establishes a New Test for Proving Willful Infringement and Preserves the Sanctity of the Attorney-Client Privilege*, 24 Santa Clara Computer & High Tech. L.J. 167, 173 (2007). Patentees would send letters with copies of the patent "to large numbers of potential defendants and demand the companies buy a license to the patent without providing any analysis or other rationale." *Ibid.* Under *Underwater Devices* and its progeny, this manufactured "'knowledge' of the patentee's rights, satisfying the notice requirement, exposed the recipients to an increased threat of willful infringement under the duty

of due care standard, even when the companies were provided no real basis for believing they were infringing the patent in question." *Ibid.*

The notice-letter tactic was widespread in the years when *Underwater Devices* was the law. Companies "were receiving up to *ten letters a day* from patent holders alleging infringement." Christopher Ryan Lanks, In re Seagate: *Effects and Future Development of Willful Patent Infringement*, 111 W. Va. L. Rev. 607, 635 (2009) (emphasis added).

And it was effective. Willfulness was found in 63.8% of cases during the *Underwater Devices* regime—about double the percentage today. Christopher B. Seaman, *Willful Patent Infringement and Enhanced Damages After* In re Seagate: *An Empirical Study*, 97 Iowa L. Rev. 417, 444 (2012). Even in cases where the allegation of infringement was weak, the threat of trebled damages created a powerful and unjust incentive for defendants to settle. "Many companies viewed the risk of treble damages in a later litigation as unacceptable, and would agree to pay the patentee for a license that they arguably did not need." Ferguson, *supra*, at 173. The attractiveness of this tactic for non-practicing patent-enforcement entities led to substantial increases in patent litigation and dramatically enhanced the settlement value and litigation risk associated with even borderline patent suits. *See ibid.*

Underwater Devices also disrupted the confidentiality of attorney-client communications by placing powerful pressure on defendants to waive attorney-client privilege in order to assert advice-of-counsel defenses. Because opinion letters were virtually re-

quired, yet their production would waive privilege, these supposed "opinions of counsel" could not provide the full candor clients needed to "mak[e] informed business decisions": They were mere "window-dressing." Ferguson, *supra*, at 172.

Not only were practicing companies prevented from relying on the forthrightness of their counsel; they were inhibited even from conducting their own patent searches. As commentators explained, because "the mere knowledge of an existing patent could be enough to trigger a claim of willfulness," the "possibility of finding such a patent discouraged some companies from conducting patent searches, in spite of the fact that by doing so, such companies might have avoided infringement." Kevin Raudebaugh, *Willful Infringement After* Seagate: *How the Willfulness Standard Has Changed and What Attorneys Should Know About It*, 5 Shidler J. L. Com. & Tech. 20, 10 (2009).

Underwater Devices also frustrated one of the core purposes of the patent system—to disseminate to "the people" the "knowledge of the invention" through the "disclosure" accompanying the patent. *Bonito Boats*, 489 U.S. at 151 (citation omitted). In 2003, the heyday of the permissive enhanced-damages regime, the Federal Trade Commission warned that "fear of willfulness charges works to undermine the patent system's disclosure goals by discouraging third parties from reading patents." Fed. Trade Comm'n, *To Promote Innovation: The Proper Balance of Competition and Patent Law and Policy*, ch. 5, at 30 (2003), *available at* http://www.ftc.gov/os/2003/10/innovationrpt.pdf ("FTC 2003 Report"). When the public was deterred

not only from reading, but even from searching for, patents, patents were no longer conduits of knowledge and the patent system's "carefully crafted bargain" was disrupted in favor of the patent holder. *Bonito Boats*, 489 U.S. at 150.

B. *Seagate*'s Threshold Requirement Of Objective Recklessness Mitigated The Problems Caused By The Federal Circuit's Former Permissive Regime.

In 2007, the Federal Circuit reduced these problems by overruling *Underwater Devices*. *See In re Seagate Tech., LLC*, 497 F.3d 1360 (Fed. Cir. 2007) (en banc). *Seagate* held that "proof of willful infringement permitting enhanced damages requires at least a showing of objective recklessness." *Id.* at 1371. "The state of mind of the accused infringer is not relevant to this objective inquiry." *Ibid.*[2]

Seagate's threshold requirement for proof of objective recklessness has played an important role in limiting the extortionate demands of non-practicing plaintiffs; after *Seagate*, threats of trebled damages were dampened in cases where non-infringement defenses were substantial. Writing in the years following the decision, commentators noted that *Seagate* reduced the ability of patentees "to place alleged infringers in a catch-22" of choosing between waiving privilege and incurring enhanced damages. Lanks, *supra*, at 639. It thus curbed non-practicing entities'

---

[2] The court further held that, "[i]f this threshold objective standard is satisfied, the patentee must also demonstrate that this objectively-defined risk" was subjectively "known" by the accused infringer or else "so obvious that it should have been known." *Seagate*, 497 F.3d at 1371.

ability "to force alleged infringers into settlement." *Ibid.* And *Seagate* mitigated another double-bind that practicing entities had faced in the *Underwater Devices* era: It "eliminated the threat of a future charge of willfulness as a reason to avoid clearance searches." Raudebaugh, *supra*, at 10.

Seagate achieved these ends while preserving the value of patents. Any fears that "patent rights might be devalued" with an objective recklessness threshold (LES Br. 31) are refuted by post-*Seagate* history. Indeed, recent years have seen more patent litigation than ever before, including litigation brought by non-practicing entities. *See* RPX, *2015 NPE Activity Highlights* 4-5 (2016), *available at* http://www.rpxcorp.com/wp-content/uploads/sites/2/2016/01/RPX-2015-NPE-Activity-Highlights-FinalZ.pdf.

C. Re-introducing A Permissive Enhanced Damages Regime Today Would Greatly Enhance The Power Of Non-Practicing Entities To Stifle Practicing Companies From Innovating.

The current plague of litigation brought by non-practicing entities makes it all the more urgent that the Court not add new weapons to their arsenal. If, as petitioners suggest, *Seagate*'s limitation of enhanced damages to willful infringement constrains district courts' discretion to award enhanced damages in appropriate cases (Halo Br. 19-21; Stryker Br. 26-34, 44-45), their proposed "flexible, totality-of-the-circumstances inquiry" (Stryker Br. 17; *accord* Halo

Br. 27) swings the pendulum too far in the other direction.

Petitioners' totality-of-the-circumstances inquiry, the test "most feared by litigants who want to know what to expect" (*United States* v. *Mead Corp.*, 533 U.S. 218, 241 (2001) (Scalia, J., dissenting)), would chill innovation, not encourage it. A test that makes enhanced damages available whenever a court determines that the "totality of the circumstances" warrant (Halo Br. 10; Stryker Br. 14) would worsen the pernicious consequences that led the Federal Circuit to abandon such a permissive approach to enhanced damages.

1. Petitioners' Approach Would Aggravate Non-Practicing Entities' Forum-Shopping Practices.

The rise of non-practicing entities with their choice of favorable district courts has exacerbated the harmful consequences caused by a discretionary regime. Under 28 U.S.C. § 1400(b) as construed by the Federal Circuit, patentees can file an "action for patent infringement" in any district where infringement allegedly occurs and the defendant conducts regular business. Because technology companies typically offer their products and services nationally, if not globally, patentees have their choice of venue when suing technology firms. *See* Jonas Anderson, *Congress as a Catalyst of Patent Reform at the Federal Circuit*, 63 Am. U. L. Rev. 961, 985-86 (2014).

Non-practicing entities—typically shell companies with few or no employees to inconvenience and near-limitless ability to reincorporate and establish supposed principal offices anywhere—can and do se-

lect their venue based principally on the perceived favorability of the district court to their cause. *See* Seaman, *supra*, at 449-50. Certain judicial districts have acquired reputations for allowing more cases to proceed to trial, finding willful infringement more frequently, and awarding higher damages than other forums.[3] And it is in those forums that non-practicing entities most often bring their patent infringement suits. Seaman, *supra*, at 449-50.

Indeed, one court—the Eastern District of Texas—"has vastly more patent disputes than any other district court," virtually becoming a specialized patent court. Joe Mullin, *Trolls Made 2015 One of the Biggest Years Ever for Patent Lawsuits*, ArsTechnica (Jan. 5, 2016), http://arstechnica.com/tech-policy/2016/01/despite-law-changes-2015-saw-a-heap-of-patent-troll-lawsuits. Over 50% of patent suits brought in recent months have been filed in the Eastern District of Texas. Jeff Bounds, *Patent Suits Flood East Texas Court*, Dallas Morning News (Dec. 13, 2015), http://www.dallasnews.com/business/headlines/20151213-patent-suits-flood-east-texas-court.ece. And in 2015, one of the most active years for patent litigation, over two-thirds of cases were filed by non-practicing entities—and those non-practicing entities chose the Eastern District of Tex-

---

[3] *See* Daniel Klerman & Greg Reilly, *Forum Selling*, 2015 S. Cal. L. Rev. (forthcoming), http://ssrn.com/abstract=2538857 at 10-12 (comparing summary judgment rates); Seaman, *supra*, at 450-51 (comparing rates of findings of willful infringement); Brian C. Howard, Lex Machina 2014 Patent Litigation Year in Review 24 (2015), *available at* http://pages.lexmachina.com/rs/lexmachina/images/2014%20Patent%20Litigation%20Report.pdf ("Lex Machina 2014 Report") (comparing damages awards).

as to sue over 60% of their targets. *See* RPX, *supra*, at 4-5, 9.

A discretionary enhanced-damages regime would aggravate this epidemic. Courts that have built their names—and their local economies—on attracting patent litigation can be expected to exercise their discretion to encourage plaintiffs to choose their districts. *See* Public Knowledge Br. 13-18. They are especially likely to do so if unchecked by meaningful appellate review. *See infra*, Part II.E. That would exacerbate the problems inherent in forum-shopping, such as undermining confidence that our legal system operates without unfair bias. Public Knowledge Br. 15-16.

2. Petitioners' Approach Also Would Enable Non-Practicing Entities To Threaten Expensive And Unpredictable Trials On Enhanced Damages.

Any court that predictably exercises its discretion to disproportionately favor enhanced damages—or even to deny summary judgment precluding enhanced damages, *see* Part II.B, *infra*—will enable plaintiffs to credibly threaten trebled damages even in weak cases.

Plaintiffs have devised many strategies to support these threats. Plaintiffs often will select for assertion patents in their portfolio that appear in the file history of any one of the defendant's thousands of patents and patent applications, and assert that the defendant thus "knew" of the patent. Such arguments ignore the realities of patent prosecution. EMC has over 5,100 United States patents and over 2,800 pending applications. Each one will generally

have a dozen or so references cited in its prosecution history. Under petitioners' standard, plaintiffs would be able to argue to a jury that the defendant thus "knew" of each such patent and its relevance. Courts sometimes permit these arguments (*see, e.g.*, *Veritas Operating Corp.* v. *Microsoft Corp.*, 562 F Supp. 2d 1141, 1277 (W.D. Wash. 2008)), even though the patent is but one of thousands of patents cited each year and typically known only to outside patent counsel. *But see Cortelyou* v. *Charles Eneu Johnson & Co.*, 207 U.S. 196, 201 (1907) (notice to defendant's employee is not attributable to defendant where employee "was not an officer or general agent of the defendant company"). Or plaintiffs may rely on notice letters.

Armed with such threats, non-practicing entities will file ever more litigation and coerce even more excessive settlements than before. Indeed, Halo urges this Court to endorse this practice, contending that a "defendant that learns of a patent ... through letters from the patent owner is plainly more culpable" and thus can be made liable for enhanced damages under its "flexible" test. Halo Br. 27 [4]

Yet just last Term, in enunciating the standard of intent required for inducement liability, this Court

---

[4] Stryker appears to disagree, contending that "[e]nhancement may be less appropriate ... when requested by a patentee that relies on the threat of treble damages in order to exact exorbitant licensing fees from practicing entities." Stryker Br. 43. This dispute highlights the forum-shopping potential petitioners' totality-of-the-circumstances approach would create: District courts can be expected to disagree about what standards to apply at least as much as petitioners disagree with each other.

warned that such tactics employed by non-practicing entities "can impose a harmful tax on innovation." *Commil*, 135 S. Ct. at 1930 (quotation marks omitted). Although the Court ruled that such concerns did not require proof that an accused inducer knew that a patent was *valid* to establish inducement—in part thanks to the new "avenues that accused inducers have to obtain rulings on the validity of patents"—the Court reaffirmed that liability for indirect infringement "requires proof the defendant knew the acts were infringing." *Id.* at 1928, 1931. Thus, "if the defendant reads the patent's claims differently from the plaintiff, and that reading is reasonable," the defendant cannot be secondarily liable for infringement committed by another. *Id.* at 1928.

Similarly, a defendant should not be liable for enhanced damages if the patent is reasonably read not to cover its activities. If an objectively reasonable non-infringement position could not defeat a patentee's claim for enhanced damages, then patentees regularly would be able to invite the jury to infer from a defendant's failure to offer opinions of counsel that the defendant subjectively knew itself to be infringing, and thereby obtain enhanced damages. *See* Halo Br. 29 (contending that Pulse's decision to offer only an "analysis by a non-lawyer who knew nothing about the relevant legal principles," rather than opinion of counsel, supports enhanced damages).

With an objective recklessness requirement, however, defendants do not need to disprove their subjective intent to a jury. Thus, under current Federal Circuit law, "there is no affirmative obligation to obtain opinion of counsel" (*Seagate*, 497 F.3d at 1371); the defendant may rely on the objective rea-

sonableness of its non-infringement position. That has been "a welcome development" in patent law. Ferguson, *supra*, at 182. And *Seagate* reduced the impingement on the attorney-client relationship associated with the potential need to disclose opinions of counsel, as was previously required to defend against a charge of willfulness. *Ibid.*

Adhering to the requirement that a patentee must demonstrate that the defendant's position was objectively unreasonable to defeat a motion for summary judgment eliminating enhanced damages would further "simplify the case for both the parties and the court by removing the often complex issues associated with determining the scope of any waiver." Ferguson, *supra*, at 182. Moreover, without the need to disclose opinions of counsel to remove enhanced damages from the case, "the amount of discovery that would take place" would be reduced. *Ibid.* "The net result would be a decrease in the cost of patent litigation for everyone involved." *Ibid.*

These practical considerations, well known to amicus, counsel strongly against adopting petitioners' overbroad reading of Section 284.

II. SECTION 284 REQUIRES AT LEAST A DETERMINATION OF OBJECTIVE RECKLESSNESS, MADE BY THE COURT AND REVIEWED DE NOVO.

Rather than permitting patent plaintiffs to threaten every defendant with possible enhanced damages, Section 284 requires plaintiffs to prove objective recklessness, at a minimum, to obtain enhanced damages. Objective recklessness is the *sine qua non* of enhanced damages because such damages

are punitive additions to—indeed, multipliers of—the compensatory award. Punitive damages are not available where the defendant takes an objectively reasonable position that it is not violating the plaintiff's rights. If a court later finds the defendant's reasonable view to be mistaken, the plaintiff is entitled to compensatory damages, not vindictive ones.

Moreover, where the defendant's position is objectively reasonable as a matter of law, the district court must grant summary judgment precluding enhanced damages. If enhanced damages cannot be ruled out at summary judgment, then the judge should decide the availability and amount of enhanced damages after the compensatory verdict, subject to the constraints on punitive damages and to de novo review. Thus, this Court should clarify that the Federal Circuit is correct to allocate the "threshold determination of objective recklessness" to the judge, reviewed de novo (*Bard Peripheral Vascular, Inc.* v. *WL Gore & Assocs.*, 682 F.3d 1003, 1006-08 (Fed. Cir. 2012)); but it is incorrect to permit "the jury" to find other facts underlying the enhanced damages determination, "reviewed for substantial evidence" (*id.* at 1008).

A. Because Enhanced Damages Under Section 284 Are Punitive, Section 284 Requires At Least Proof Of Objective Recklessness.

Under Section 284, enhanced damages are a punitive remedy available in addition to compensatory damages in justified cases. Proof of objective recklessness is required for such punitive enhancements

across the spectrum of American law. Patent law is no exception.

1. Historically, Enhanced Damages Have Been Limited To Cases Of Willful Infringement.

The primary historically recognized basis for enhanced damages in patent cases always has been willful infringement. As far back as 1854, this Court explained that "there is no good reason why taking a man's property in an invention should be trebly punished" unless "the injury is wanton or malicious." *Seymour* v. *McCormick*, 57 U.S. 480, 488-89 (1854); *accord, e.g.*, *Livingston* v. *Woodworth*, 56 U.S. 546, 560 (1854) (it is inappropriate to impose "any consequences in the nature of a penalty" on defendants who are not "wanton infringers"); *Cincinnati Siemens-Lungren Gas Illuminating Co.* v. *W. Siemens-Lungren Co.*, 152 U.S. 200, 204 (1894) (similar); *Corning* v. *Burden*, 56 U.S. 252, 271 (1854) (similar).

As this Court has since formulated that principle, a patent owner can recover "treble damages for willful infringement." *Dowling* v. *United States*, 473 U.S. 207, 227 n.19 (1985); *see also Safeco Ins. Co. of Am.* v. *Burr*, 551 U.S. 47, 57 (2007) ("the terms 'willful,' 'wanton,' and 'reckless,' ... have been treated as meaning the same thing" (citation omitted)). Cases before and after have reiterated that principle, as the Federal Circuit recounted in *Seagate*. 497 F.3d at 1368.

To obtain enhanced damages on the basis of willfulness, a patentee must show at least recklessness. *See Safeco*, 551 U.S. at 57-60, 68-70. That is how

this Court has defined "willful" violations in interpreting statutes and it also "reflects common law usage" where no statutory provision applies. *Id.* at 57. As the Court has explained, the baseline of recklessness requires "conduct violating an objective standard: action entailing 'an unjustifiably high risk of harm that is either known or so obvious that it should be known.'" *Id.* at 68. That is the meaning of recklessness under "the common law." *Id.* at 68-69.

The Federal Circuit thus was entirely correct in *Seagate* in "hold[ing] that proof of willful infringement permitting enhanced damages requires at least a showing of objective recklessness." 497 F.3d at 1371. And it was equally correct about the meaning of this objective recklessness standard in the context of patent cases: "to establish willful infringement, a patentee must show by clear and convincing evidence that the infringer acted despite an objectively high likelihood that its actions constituted infringement of a valid patent." *Ibid.*

2. Even If Enhanced Damages Were Appropriate In Other Cases, Such Damages Are Punitive In Nature.

Whether or not confined to cases of willful infringement, it is well settled that enhanced damages under Section 284 are punitive in nature and must be carefully cabined as such. Since its earliest cases on enhanced patent damages, this Court has described them as "vindictive or punitive damages." *Seymour*, 57 U.S. at 489; *Tilghman* v. *Proctor*, 125 U.S. 136, 144 (1888); *Root* v. *Ry. Co.*, 105 U.S. 189, 196 (1882).

The current version of the Patent Act continues this approach, treating enhanced damages as a punitive addition that the court may award on top of compensatory damages in appropriate cases. Section 284 provides that "[u]pon finding for the claimant the court shall award the claimant damages *adequate to compensate for the infringement*." 35 U.S.C. § 284 ¶ 1 (emphasis added). After these compensatory damages are assessed, "the court may increase the damages up to three times the amount found or assessed." *Id.* § 284 ¶ 2.

As the FTC explained in its 2011 report on the patent system, damages awarded under the compensatory provision of paragraph 1 make the patentee whole. Any additional "punitive" awards are left for the "enhanced damages" provision of paragraph 2, "which target[s] only intentional and not inadvertent infringement." Fed. Trade Comm'n, *The Evolving IP Marketplace* at 174 (2011), *available at* https://www.ftc.gov/sites/default/files/documents/reports/evolving-ip-marketplace-aligning-patent-notice-and-remedies-competition-report-federal-trade/110307patentreport.pdf ("FTC 2011 Report"). Accordingly, this Court has described damages under paragraph 2 as "punitive or 'increased' damages." *Aro Mfg. Co.* v. *Convertible Top Replacement Co.*, 377 U.S. 476, 508 (1964); *see also Fla. Prepaid Postsecondary Educ. Expense Bd.* v. *Coll. Sav. Bank*, 527 U.S. 627, 648 n.11 (1999).

This design reflects the goal of the patent system to provide, in the absence of a punitive remedy, damages "adequate to compensate for the infringement," but no more. 35 U.S.C. § 284. As the FTC explained, "[o]vercompensation compared to the market reward

can distort competition among technologies." FTC 2011 Report at 141. The Commission warned that the "threat of high damages" may generate unjust settlements whose expenses will "be passed on to consumers." *Id.* at 145. "Patent damages that over-compensate patentees compared to the market reward incentivize speculation through the purchase and assertion of patents in litigation." *Id.* at 146. When such damages are on the table, companies feel compelled to take licenses, rather than levelling "socially beneficial challenges to invalid[ate] or narrow patents, which also raises the cost of innovation." *Ibid.* In addition, were damages beyond those necessary to compensate the patent-holder available in run-of-the-mill cases, this would damage "R&D efforts, which can decrease innovation." *Ibid.*

3. Punitive Damages Require Proof Of Objective Recklessness.

Given the punitive nature of enhanced damages under Section 284, a showing of objective recklessness is necessary. This Court's cases involving punitive awards under other federal statutes that do not specify a standard establish that recklessness is the minimum showing for such an award. For example, in *Smith* v. *Wade*, 461 U.S. 30 (1983), this Court held that, because Section 1983 implicitly made punitive damages available without specifying any standards governing the award of such damages (*id.* at 35-36), "the common-law rule"—that "punitive damages" require a showing of "reckless indifference to the rights of others"—governs. *Id.* at 38-55 & nn.8-13.

Accordingly, the existence of objectively reasonable invalidity or non-infringement defenses (includ-

ing those based on alternative claim constructions) will preclude enhanced damages. Under *Safeco*, "when the [defendant]'s reading of the [patent] is objectively reasonable" and would provide a valid defense, the defendant has not acted with the objective recklessness needed to support punitive damages. 551 U.S. at 70 n.20. Thus, where a defendant asserts an objectively reasonable noninfringement or invalidity position—even one that a court later rules is "erroneous"—it cannot be liable for enhanced damages. 551 U.S. at 69.

That has long been the rule. The regional circuits did not permit enhanced damages "where the validity of the patent and any possible infringement [wa]s open to honest doubt." *Wilden Pump & Eng'g Co.* v. *Pressed & Welded Prods. Co.*, 655 F.2d 984, 989 (9th Cir. 1981) (citation omitted); *see also* Askeladden Br. 21 (collecting cases). *Underwater Devices* was the aberration, which the Federal Circuit corrected in *Seagate*. *See* Zimmer Br. 19-26, 34-43.

Adherence to the objective recklessness requirement is essential to prevent enhanced damages from wreaking havoc on the innovation the patent system is supposed to encourage. There are nearly 2.5 million U.S. patents in force, a number that has been growing by 200,000-plus each year. Dennis Crouch, *The Number of U.S. Patents in Force*, PatentlyO, http://patentlyo.com/patent/2014/10/number-patents-force.html (updated Oct. 25, 2014). Whenever a technology company introduces a new product or service, there inevitably is a background risk that some facet of the new product or service implicates one or more of these millions of patents; but often it

reasonably appears that the asserted patent is invalid or not infringed. Were companies, like amicus, potentially exposed to punitive damages in such situations, that would harm innovation, not foster it. FTC 2011 Report at 174-75. A practicing company with an objectively reasonable reading of the patent should not face the coercive pressure of enhanced damages.

B. Courts Must Grant Summary Judgment Precluding Enhanced Damages Where Defendants Take Reasonable Noninfringement Or Invalidity Positions.

Although *Seagate* requires proof of objective recklessness, companies with objectively reasonable defenses still face the coercive pressure of enhanced damages verdicts because, in the districts where patent suits most often are filed, summary judgment is improperly disfavored. In cases where the defendant has objectively reasonable defenses of noninfringement or invalidity (often based on claim construction), those courts do not hold patentees to their burden at the summary judgment stage of establishing objective unreasonableness, as required by *Celotex Corp.* v. *Catrett*, 477 U.S. 317, 324 (1986).

Indeed, certain courts sometimes "requir[e] parties to submit briefs to seek permission to file summary judgment motions" or simply maintain "a norm shared by the district's judges to grant summary judgment motions rarely." J. Jonas Anderson, *Court Competition for Patent Cases*, 163 U. Pa. L. Rev. 631, 655, 674-75 (2015).

In districts unwilling to implement Rule 56 and *Celotex* in patent cases, patentees routinely are permitted to get to the jury with cases based only on inferences drawn from alleged knowledge of the *existence* of a patent. *See* Seaman, *supra*, at 451. Non-practicing entities predictably choose such districts that will enable them to get to trial and threaten defendants with the risk of a sizeable jury verdict that may then be trebled. *See supra*, Part I.C.

As a practical matter, this often puts a defendant to the choice of either settling the case or waiving the attorney-client privilege so it can defend itself against assertions of actual knowledge by presenting evidence that it believed it was not infringing. This double-bind, combined with the massive expense of patent litigation, generates a powerful incentive to settle.

It also predictably affects the candor of the advice that in-house and outside counsel provide their clients when they are asked to review and advise on a notice letter. Knowing that they will need to disclose their opinion letter or else face a jury invited to infer that their failure to produce the letter supports enhanced damages, counsel may be unable to give their clients impartial legal advice. *See* Ferguson, *supra*, at 172.

Finally, it discourages practicing companies from conducting thorough prior art searches and citing the results to the PTO when they file their own patent applications. If they will be charged with "knowledge" of the existence and relevance of any patent they cite, even in completely unrelated contexts,

they may be highly cautious about finding and citing such patents. *See* FTC 2003 Report, ch. 5, at 30.

To mitigate these problems, this Court should reiterate that district courts must grant summary judgment precluding enhanced damages where the defendant presents an objectively reasonable defense or the plaintiff otherwise fails to meet its burden under *Celotex*.

C. When Summary Judgment Is Not Available, The Court Should Make All Factual And Discretionary Determinations Relevant To Enhanced Damages That Remain After The Jury's Award Of Compensatory Damages.

Current Federal Circuit law requires the district court to decide whether a defense is objectively reasonable, but allows the jury to make other "finding[s]" "underlying" the enhanced damages determination. *Bard*, 682 F.3d at 1007-08. Under Section 284 and Federal Rule of Civil Procedure 52, however, *all* underlying questions not already decided by the infringement verdict are for the judge. That is how enhanced patent damages have been determined for centuries. The Seventh Amendment does not prohibit this longstanding practice, dictated by Congress.

1. Section 284 Explicitly States That The Court Shall Decide Whether To Enhance Damages After The Jury Awards Compensatory Damages.

The text of Section 284 commits the *entire* question whether to enhance damages to the court. The statute contemplates that the "jury" may find com-

pensatory damages, but it explicitly provides that only the "*court* may increase the damages up to three times the amounts found or assessed." 35 U.S.C. § 284 (emphasis added).

Because the decisions whether to enhance damages, and by how much, are for the court, any factual questions relevant only to a patentee's request for enhanced damages should be tried only to the court under Rule 52. The court should hear this evidence after the jury makes a finding of infringement and awards compensatory damages. There is nothing unusual about the bifurcated procedure required by § 284. For example, before the jury finds whether the defendant has infringed the claims, the court determines the meaning of the claims. *See Markman* v. *Westview Instruments, Inc.*, 517 U.S. 370, 377-91 (1996). Even though the "mongrel practice" (*id.* at 378) of claim construction has underlying factual components, it is still for the court to decide those factual questions without a jury, pursuant to Rule 52. *Teva Pharm. USA, Inc.* v. *Sandoz, Inc.*, 135 S. Ct. 831, 837-38 (2015).

This has long been the rule for enhanced damages as well. In *Day* v. *Woodworth*, for example, the patentee objected to an instruction allowing the jury to find only "actual damages." 54 U.S. 363, 371 (1852). The Court acknowledged that in common-law trespass cases, "a jury may inflict what are called exemplary, punitive, or vindictive damages upon a defendant," but explained that this is not the rule for patent cases. *Ibid.* "The only instance where this power of increasing the 'actual damages' is given by statute is in the patent laws of the United States. But there *it is given to the court and not to the jury*."

Id. at 372 (emphasis added). The Court explained how this bifurcated system operated: First, "[t]he jury must find the 'actual damages' incurred by the plaintiff." *Ibid.* Then, "if, *in the opinion of the court*, the defendant has not acted in good faith, or has been stubbornly litigious, or has caused unnecessary expense and trouble to the plaintiff, the court may increase the amount of the verdict, to the extent of trebling it." *Ibid.* (emphasis added).

The Court reaffirmed this procedure eight years later, using almost identical language, in *Teese* v. *Huntingdon*, 64 U.S. 2, 9 (1860). And in *Seymour*, the Court again held that "[t]he power to inflict vindictive or punitive damages *is committed to the discretion and judgment of the court* within the limit of trebling the actual damages found by the jury." 57 U.S. at 489 (emphasis added).

Thus, today's Patent Act, like its predecessors, commits the question whether to enhance damages—along with all predicate questions of fact—to the court. Where a jury has found infringement, it is not also within the province of the jury to evaluate whether the defendant's non-infringement defenses were objectively *reasonable*; that is a question for "the court," whether it be factual or legal in nature. 35 U.S.C. § 284. The Federal Circuit is therefore correct that "the judge remains the final arbiter of whether the defense was reasonable." *Bard*, 682 F.3d at 1007-08.

But the court of appeals is wrong to view other underlying findings, such as "subjective willfulness," as ones for the jury. *Bard*, 682 F.3d at 1008. The accused infringer's mental state is irrelevant to any

question of direct infringement to be put before the jury, because "[d]irect infringement is a strict-liability offense." *Commil*, 135 S. Ct. at 1926. And even in cases alleging indirect infringement, the defendant's "belief as to invalidity" is not relevant to the question for the jury. *Id.* at 1929. Thus, *both* whether any defenses are objectively reasonable *and* whether any invalidity defenses are sincerely held should be resolved only by the court as part of its enhanced damages analysis.

If district courts were consistently to follow this procedure, it would reduce the power of a non-practicing entity to coerce settlement by threatening to sue in a court where its case will reach a jury and to invite that jury to find the factual predicates necessary for enhanced damages based on nothing more than receipt of a notice letter. *See* FTC 2011 Report at 176. That is in large part because "judges are much less likely to find willfulness than juries" under the appropriate standard. Seaman, *supra*, at 464.

This Court should clearly reiterate what it has stated since the 1850s: that, under the statute, the court makes the findings justifying enhanced damages that are not inherent in the jury's infringement verdict.

2. Congress's Allocation Of Responsibility Is Not Unconstitutional.

The Seventh Amendment does not call into question Congress's longstanding assignment to district courts of the power to make all determinations justifying enhanced damages. As the Court explained in *Markman*, the historical record contains only a "mere

smattering of patent cases," "destitute of any decision of importance," "from th[e] period" preceding the adoption of the Seventh Amendment. 517 U.S. at 379-81 (citation omitted); *accord* H.I. Dutton, *The Patent System and Inventive Activity During the Industrial Revolution, 1750-1852* 71 (1984). In these cases, "few juries were initially seen." Daniel P. Sullivan, *Must the Jury Reach a Verdict? The Constitutionality of Eliminating Juries in Patent Trials by Creating an Article I Tribunal*, 7 J. Marshall Rev. Intell. Prop. L. 754, 762 (2008).

In particular, "[n]o case" has been "found in which a British jury addressed the issue of increased awards or punitive damages in a patent infringement case." John B. Pegram, *The Willful Patent Infringement Dilemma and the 7th Amendment*, 86 J. Pat. & Trademark Off. Soc'y 271, 280 (2004). And, as explained in Part II.C.1, *supra*, when "cases from this Court ... first reveal actual practice, the practice revealed is of the judge" deciding whether to award enhanced damages. *Markman*, 517 U.S. at 382; *see Day*, 54 U.S. at 372; *Seymour*, 57 U.S. at 489; *Teese*, 64 U.S. at 9.

Moreover, considering "the relative ... skills of judges and juries and the statutory policies that ought to be furthered by the allocation," it is clear that judges are better suited to decide the availability and amount of enhanced damages. *Markman*, 517 U.S. at 384. As commentators have explained, because of the complexities of patent litigation, juries are not well equipped to determine whether an accused infringer acted with *objective* recklessness, and so the Seventh Amendment should not apply to the enhanced-damages inquiry. Sullivan, *supra*, at 758-

59; Pegram, *supra*, at 283-84. The Federal Circuit, which specializes in these cases, also "believe[s] that the court is in the best position for making the determination of reasonableness." *Bard*, 682 F.3d at 1006. Empirical analyses of jury willfulness verdicts, as well as the often convoluted jury instructions that produce them, confirm that "juries have a very different understanding of what conduct is 'willful'" from that dictated by the law. Seaman, *supra*, at 446-49.

Congress's longstanding allocation to judges of responsibility for enhancing damages in patent cases is thus constitutional.

D. Due Process And Common-Law Limitations On Punitive Awards Constrain Enhanced Damages Under Section 284.

Where a judge does award enhanced damages, these punitive additions to the "damages adequate to compensate for the infringement" (35 U.S.C. § 284; *see also Seymour*, 57 U.S. at 489; *Tilghman*, 125 U.S. at 144) must be subject to the constraints that apply to punitive damages.

Under the Due Process Clause, "courts must ensure that the measure of punishment is both reasonable and proportionate to the amount of harm to the plaintiff and to the general damages recovered," and that the "reprehensibility of the defendant's conduct" justifies the size of the award. *State Farm Mut. Auto. Ins. Co.* v. *Campbell*, 538 U.S. 408, 419-20, 426 (2003). Even where an award of enhanced damages is warranted in a patent case, it will rarely—if ever—be of the type that would constitutionally permit

a substantial award. In patent infringement actions, the harm is virtually always merely "economic," not "physical," and even willful patent infringement generally does not "evince[] an indifference to or a reckless disregard of the health or safety of others." *Id.* at 419. Thus, "any award" of punitive damages will be "suspect" in the absence of "target[ing]" a "financial[ly] vulnerab[le]" patentee, "repeated actions," or "intentional malice, trickery, or deceit." *Ibid.*

Situations that would support punitive damages, like copying a plaintiff's product, are quite rare in patent cases, and almost never present in the case of suits brought by non-practicing entities against technology companies. Notably, although willfulness is alleged in the "overwhelming majority" of cases, the facts that would support a punitive award under the appropriate standard seldom are: Researchers have found that "[b]arely 10%" of complaints even "*alleged* that the defendant had copied the invention, either from the patent or from the plaintiff's commercial product." Christopher A. Cotropia & Mark A. Lemley, *Copying in Patent Law*, 87 N.C. L. Rev. 1421, 1442-43 (2009) (emphasis added). Even within the rare subset of cases alleging copying, most are Hatch-Waxman Act cases wherein "generic pharmaceutical defendants *necessarily* must copy the plaintiff's active ingredient to achieve bioequivalence." *Id.* at 1444 (emphasis added). "[A]lleged copying"—much less actual copying—is practically nonexistent in cases involving "computer-related inventions and software." *Id.* at 1446.

Moreover, treble damages will rarely be justified in patent cases because the baseline compensatory awards are often so high. The "median damages

award in 2012 was $9.5 million, including three damages awards over $1 billion." Zelin Yang, *Damaging Royalties: An Overview of Reasonable Royalty Damages*, 29 Berkeley Tech. L.J. 647, 647 (2014). Compensatory awards are actually *larger* in cases brought by non-practicing entities, where circumstances justifying enhanced damages are even rarer. *Ibid.*

Because these "compensatory damages are substantial," "the due process guarantee" generally permits punitive damages only in amounts "equal to compensatory damages." *State Farm*, 538 U.S. at 425. Moreover, because Section 284 does not specify any standards governing the availability or appropriate size of enhanced damages (*see* Part II.A.2, *supra*), federal common law principles "precede[] and should obviate any application of the constitutional standard." *Exxon Shipping Co.* v. *Baker*, 554 U.S. 471, 502 (2008). Under those principles, "a 1:1 ratio" of the punitive award to the compensatory award is "a fair upper limit." *Id.* at 513. Although *Exxon Shipping* noted that Congress provided that "treble damages" *might* be available in patent cases (*id.* at 507), Congress's decision to allow the court to determine the enhanced award "up to" the treble damages limit (35 U.S.C. § 284) suggests that this Court's common-law principles should govern in all but the most exceptional cases.

E. A Court's Determination To Award Enhanced Damages Must Be Reviewed De Novo.

Finally, there must be de novo appellate review of the ultimate determination to award enhanced

damages and the size of the award. In *Exxon Shipping*, this Court rejected the argument that "appellate abuse-of-discretion review" could sufficiently constrain the trial court, explaining that abuse-of-discretion review does not provide "much promise of a practical solution to the ... problem" of outsized punitive awards. 554 U.S. at 513 n.27. This followed the Court's earlier holding that "courts of appeals should apply a *de novo* standard of review when passing on district courts' determinations of the constitutionality of punitive damages awards." *Cooper Indus., Inc.* v. *Leatherman Tool Grp., Inc.*, 532 U.S. 424, 436 (2001) (citations omitted). Because the legal standards governing such awards "take their substantive content from the particular contexts" of the cases in which they apply, de novo review is "necessary if appellate courts are to maintain control of, and to clarify, the legal principles." *Ibid.* (citation omitted).

That is equally true of enhanced damages under Section 284. The standard of objective recklessness needed to support such damages "acquire[s] content only through application"—as do all the other case-specific considerations in determining the appropriateness and size of the award. *Cooper*, 532 U.S. at 436 (citation omitted).

Moreover, the appellate court is in the best position to assess the objective merits of the defendant's noninfringement and invalidity defenses. The Federal Circuit hears every appeal of "any civil action arising under, or in any civil action in which a party has asserted a compulsory counterclaim arising under," the Patent Act. 28 U.S.C. § 1295(a)(1). That court thus has seen firsthand the spectrum of merit

across the defenses raised by accused infringers, and is in the best position to judge which of those defenses are reasonable.[5]

It is for this reason that the Federal Circuit has held that "the objective determination of recklessness, even though predicated on underlying mixed questions of law and fact, is best decided by the judge as a question of law subject to *de novo* review." *Bard*, 682 F.3d at 1007. The ultimate determination of what conduct is *objectively* reckless does not depend on credibility determinations, and it is the court of appeals' exposure to the *range* of defenses rather than the trial court's exposure to the evidence in a single case that is dispositive. Therefore, the traditional arguments in favor of a deferential standard of review are inapposite here.

Rather, for the question whether a defense was reasonable, "as a matter of the sound administration of justice, one judicial actor"—the Federal Circuit—"is better positioned than another"—the district court—"to decide the issue in question," and so this Court should not "strip" the "federal appellate court

---

[5] This advantage of a de novo standard did not yet exist when, 90 years before the creation of the Federal Circuit, the Court affirmed a district court's decision not to enhance damages, remarking that "[t]he allowance of an increase of damages under the statute is a matter which rests *somewhat* in the discretion of the court." *Topliff* v. *Topliff*, 145 U.S. 156, 174 (1892) (emphasis added). *Contra* Stryker Br. 24. The other case on which petitioners rely to support their proposed abuse-of-discretion standard of review, *Birdsall* v. *Coolidge*, 93 U.S. 64 (1876), says only that the "discretion" to enhance damages rests with the judge and that "[n]o discretion is vested in the jury." *Id.* at 70. It does not mention any standard of appellate review.

of its primary function as an expositor of law." *Miller* v. *Fenton*, 474 U.S. 104, 114 (1985).

The Federal Circuit, and ultimately this Court in appropriate cases, must independently review any enhanced damages award to ensure it satisfies constitutional, statutory, and common-law limits.

CONCLUSION

This Court should hold that enhanced damages under Section 284 cannot be awarded absent objective recklessness, and that any award must comport with the limits on punitive damages, subject to plenary review by the court of appeals.

Respectfully submitted.

PAUL T. DACIER
KRISHNENDU GUPTA
WILLIAM R. CLARK
THOMAS A. BROWN
EMC CORPORATION
176 South Street
Hopkinton, MA 01748
(508) 293-6654

THOMAS G. HUNGAR
Counsel of Record
MATTHEW D. MCGILL
GIBSON, DUNN & CRUTCHER LLP
1050 Connecticut Avenue, N.W.
Washington, D.C. 20036
(202) 955-8500
thungar@gibsondunn.com

ALEXANDER N. HARRIS
GIBSON, DUNN & CRUTCHER LLP
555 Mission Street
Suite 3000
San Francisco, CA 94105
(415) 393-8200

Counsel for Amicus Curiae EMC Corporation

January 20, 2016

Supreme Court, U.S.
FILED
DEC 16 2015
OFFICE OF THE CLERK

Nos. 14-1513 & 14-1520

In the Supreme Court of the United States

HALO ELECTRONICS, INC.,
PETITIONER,

v.

PULSE ELECTRONICS, INC., PULSE ELECTRONICS CORPORATION,
RESPONDENT.

STRYKER CORPORATION, STRYKER PUERTO RICO, LTD., AND STRYKER SALES CORPORATION,
PETITIONER,

v.

ZIMMER, INC. AND ZIMMER SURGICAL, INC.,
RESPONDENT.

ON WRITS OF CERTIORARI TO THE UNITED STATES COURT OF APPEALS FOR THE FEDERAL CIRCUIT

BRIEF FOR *AMICUS CURIAE* ERICSSON INC. IN SUPPORT OF NEITHER PARTY

JOEL L. THOLLANDER
JOHN B. CAMPBELL
(Admission Pending)
MCKOOL SMITH, P.C.
300 W. 6th Street, Suite 1700
Austin, TX 78701
(512) 692-8700

MIKE MCKOOL, JR.
Counsel of Record
MCKOOL SMITH, P.C.
300 Crescent Court, Suite 1500
Dallas, TX 75201
(214) 978-4900
mmckool@mckoolsmith.com

Counsel for Amicus Curiae

CORPORATE DISCLOSURE STATEMENT

Ericsson Inc. is wholly-owned by Ericsson Holding II Inc., which in turn is wholly-owned by Telefonaktiebolaget LM Ericsson. Telefonaktiebolaget LM Ericsson is publicly held and trades in the United States through American Depository Receipts under the name LM Ericsson Telephone Company.

TABLE OF CONTENTS

Page

CORPORATE DISCLOSURE STATEMENT i

TABLE OF AUTHORITIES ii

STATEMENT OF INTEREST 1

SUMMARY OF ARGUMENT 2

ARGUMENT 6

I. THE FEDERAL CIRCUIT HAS ERECTED A PRACTICALLY INSURMOUNTABLE BAR TO THE AWARD OF ENHANCED DAMAGES 6

II. THE COURT'S PRECEDENTS INDICATE THAT THE BAR HAS BEEN SET TOO HIGH 11

III. THE UNAVAILABILITY OF ENHANCED DAMAGES HAS FOSTERED PATENT HOLD-OUT AND DIMINISHED RESPECT FOR INTELLECTUAL PROPERY RIGHTS 14

IV. BUT IN DECIDING THIS CASE, THE COURT SHOULD NOT SET THE BAR TOO LOW 15

A. District Courts Should Have a Standard to Guide the Enhancement of Damages 16

B. The Standard Should Advance the Punitive and Deterrent Purposes of Damages Enhancement 18

C. To Advance These Purposes, the Standard Should Require Willful or Bad-Faith Infringement—Including Knowledge of the Patent Combined With Culpable Conduct 22

D. With a Proper Standard in Place, the Federal Circuit's Additional Barriers to Enhancement Are Not Needed 25

CONCLUSION 28

TABLE OF AUTHORITIES

Page(s)

CASES

Apple Inc. v. Motorola, Inc.,
757 F.3d 1286 (Fed. Cir. 2014) 14

Aro Mfg. Co. v. Convertible Top Replacement Co.,
377 U.S. 476 (1964) 22, 23

Bard Peripheral Vascular, Inc. v. W.L. Gore & Assocs., Inc.,
682 F.3d 1003 (Fed. Cir. 2012) 10, 28

Beatrice Foods Co. v. New Eng. Printing & Litho. Co.,
923 F.2d 1576 (Fed. Cir. 1991) 20, 21, 23

Bott v. Four Star Corp.,
807 F.2d 1567 (Fed. Cir. 1986) 5, 10, 24, 27

Brooks Furniture Manufacturing, Inc. v. Dutailier Int'l, Inc.,
393 F.3d 1378 (Fed. Cir. 2005) 11

Carnegie Mellon Univ. v. Marvell Tech. Group, Ltd., No. 14-1492, 2015 U.S. App. LEXIS 13622 (Fed. Cir. Aug. 4, 2015) ..... passim

Commil USA, LLC v. Cisco Sys.,
135 S. Ct. 1920 (2015) ..... passim

Cooter & Gell v. Hartmarx Corp.,
496 U.S. 384 (1990) 28

Dowling v. United States,
473 U.S. 207 (1985) 22

Exxon Shipping Co. v. Baker,
554 U.S. 471 (2008) 20

Global Traffic Techs., LLC v. Morgan,
No. 14-1537, 2015 U.S. App. LEXIS
9281 (Fed. Cir. June 4, 2015) 10, 26

GM Corp. v. Devex Corp.,
461 U.S. 648 (1983) 17

Halo Elecs., Inc. v. Pulse Elecs., Inc.,
769 F.3d 1371 (Fed. Cir. 2014) 10, 11, 26

Highmark Inc. v. Allcare Health Mgmt. Sys.,
134 S. Ct. 1744 (2014) ..... passim

In re Innovatio IP Ventures,
No. 11-CV-9308, 2013 U.S. Dist. LEXIS
144061 (N.D. Ill. Sept. 27, 2013) 14

In re Seagate Tech., LLC,
497 F.3d 1360 (Fed. Cir. 2007) ..... passim

Independent Fed'n of Flight Attendants v. Zipes,
491 U.S. 754 (1989) 16

Jurgens v. CBK, Ltd.,
80 F.3d 1566 (Fed. Cir. 1996) 7, 20, 23, 25

*Knorr-Bremse Systeme Fuer
Nutzfahrzeuge GmbH v. Dana Corp.*,
383 F.3d 1337 (Fed. Cir. 2004) 8

Lorillard v. Pons,
434 U.S. 575 (1978) 17

Martin v. Franklin Capital Corp.,
546 U.S. 132 (2005) 16

Mathis v. Spears,
857 F.2d 749 (Fed. Cir. 1988) 20

Octane Fitness, LLC v. ICON Health & Fitness, Inc.,
134 S. Ct. 1749 (2014) ..... passim

Read Corp. v. Portec, Inc.,
970 F.2d 816 (Fed. Cir. 1992) 5, 20, 24

Rite-Hite Corp. v. Kelley Co.,
819 F.2d 1120 (Fed. Cir. 1987) ..... passim

Root v. Ry. Co.,
105 U.S. 189 (1882) 19

Seymour v. McCormick,
57 U.S. 480 (1854) ..... passim

Stryker Corp. v. Zimmer, Inc.,
782 F.3d 649 (Fed. Cir. 2015) 8, 9, 10, 14

Teese v. Huntingdon,
64 U.S. 2 (1860) 18, 21, 22, 23

Tilghman v. Proctor,
125 U.S. 136 (1888) 19

Uniloc USA, Inc. v. Microsoft Corp.,
632 F.3d 1292 (Fed. Cir. 2011) 9

Yarway Corp. v. Eur-Control USA, Inc.,
775 F.2d 268 (Fed. Cir. 1985) 7, 23

STATUTES

35 U.S.C. § 284 ..... passim

35 U.S.C. § 285 ..... passim

Patent Act of 1836, Chapter 357, 5 Stat. 117
(1836) 17, 19

Patent Act of 1870, Chapter 230, 16 Stat. 198
(1870) 17

OTHER AUTHORITIES

Colleen Chien, *Holding Up and Holding Out*,
21 MICH. TELECOMM. & TECH. L. REV. (2014) 14

Collen Chien, *The Best Way to Fight a Patent Demand May Be to do Nothing*,
WALL STREET JOURNAL (Nov. 23, 2015) 15

Supreme Court Rule 37.3 1

Supreme Court Rule 37.6 1

STATEMENT OF INTEREST[1]

Amicus curiae Ericsson Inc. is a leading supplier of wireless network equipment, a leading developer of wireless technologies, and both a licensor and licensee of many substantial patents in the telecommunications industry. With more than 100,000 employees globally, Ericsson is a pioneer of the modern cellular network. Over 1,000 networks in more than 180 countries use Ericsson equipment, and a significant portion of the world's mobile traffic passes through these networks. Ericsson currently devotes more than 20,000 employees and roughly five billion dollars a year, almost 15% of its net sales, to research and development—and Ericsson's innovations have been rewarded with over 37,000 issued patents worldwide. Ericsson employs more than 10,000 people in the United States and supplies network equipment and/or services to every major U.S. telecommunications operator from offices located throughout the country.

As both a licensor and a licensee, Ericsson has a substantial interest in the development of fair and balanced rules governing patent enforcement. Ericsson files this *amicus* brief to address the important issue of damages enhancement raised in these appeals. In particular, Ericsson urges the Court to chart a middle course between those who

---

[1] Pursuant to Supreme Court Rule 37.6, *amicus curiae* states that no counsel for any party authored this brief in whole or in part and that no entity or person, aside from *amicus curiae* and its counsel, made any monetary contribution toward the preparation or submission of this brief. Pursuant to Supreme Court Rule 37.3, counsel of record for all parties have consented to this filing in letters on file with the Clerk's office.

might advocate maintaining the Federal Circuit's current, heavily-glossed approach to enhancement of patent-infringement damages under 35 U.S.C. § 284—which sets the bar far too high—and those who might advocate an exclusive focus on the discretionary language of § 284—which, lacking an express standard, would set the bar far too low.

SUMMARY OF ARGUMENT

District courts possess statutory authority to award enhanced damages for patent infringement: the statute provides simply that "the court may increase the damages up to three times the amount found or assessed." 35 U.S.C. § 284. For many years, the Federal Circuit held that damages could be enhanced under this provision in cases of "willful infringement," or those in which the infringer acted in "bad faith." This was a fundamentally factual determination based on the totality of the circumstances, subject to proof by a preponderance of the evidence, and reviewed for abuse of discretion.

Over the last decade, the Federal Circuit completely reshaped its enhancement jurisprudence. It rejected a disjunctive test in favor of a test focused solely on willful infringement. It established a new "objective recklessness" requirement that cannot be met when the infringer presents a reasonable defense, including an invalidity defense, in the litigation. It further determined that the infringer need not have considered the presented defense—nor any defense—during the infringement; the infringer could, in short, have fully intended to infringe. The Federal Circuit also rejected a preponderance standard for proof of willfulness, deciding that patentees must show entitlement to an award under § 284 by clear and convincing evidence. Finally, the

Federal Circuit reversed course on the standard of review, and held that a district court's determination under § 284 would be reviewed *de novo*.

These numerous decisions have collectively erected a practically insurmountable bar to the award of enhanced damages: patent litigation is complex and competent counsel typically can be expected to cobble together a non-frivolous invalidity argument for purposes of litigation. The Federal Circuit has thus rendered § 284 largely toothless. What remains of enhanced-damages jurisprudence has little bark, and virtually no bite. Infringers have taken notice, and the unavailability of enhanced damages has fostered patent hold-out and a diminished respect for intellectual property rights.

Three of this Court's recent opinions—in *Octane*, *Highmark*, and *Commil*—suggest that § 284 cannot support the many layers of gloss that the Federal Circuit has applied to this statutory provision. *Octane* suggests that the Federal Circuit's new "objective recklessness" test "superimposes an inflexible framework onto statutory text that is inherently flexible," and further that "nothing in [the statute] justifies" application of the clear-and-convincing evidentiary standard in this context. *Octane Fitness, LLC v. ICON Health & Fitness, Inc.*, 134 S. Ct. 1749, 1755-56, 1758 (2014). *Highmark* calls into question the Federal Circuit's decision to review § 284 determinations *de novo*. *Highmark Inc. v. Allcare Health Mgmt. Sys.*, 134 S. Ct. 1744, 1748-49 (2014). And *Commil* suggests that, contrary to the Federal Circuit's current case law, a non-frivolous (though losing) argument that a patent is *invalid* cannot constitute an objectively reasonable defense

to otherwise intentional infringement. *Commil USA, LLC v. Cisco Sys.*, 135 S. Ct. 1920, 1928-29 (2015).

In light of these recent opinions, and because the Federal Circuit has set the bar for enhanced damages far too high, the Court should reject the Federal Circuit's current approach to § 284. But Ericsson also encourages the Court, in deciding these appeals, to ensure that the new bar is not set too low.

In particular, Ericsson expects some *amici* to argue that, because § 284 contains no explicit standard, the Court should simply leave damages enhancement to the unfettered discretion of the district courts. Ericsson disagrees. While the district courts certainly have statutory discretion in this area, that discretion must be guided by clear legal standards. Those legal standards should be drawn from the objectives for, and the historical judicial approach to, statutory enhancement. And they should be elucidated by the Court in these appeals.

Ericsson also expects some *amici* to argue that these legal standards should encompass punitive *and* remedial purposes for damages enhancement. Ericsson disagrees. To be sure, language in some of the decisional authority suggests that—at an earlier point in time—damages for patent infringement could be enhanced for remedial as well as punitive reasons. But the great weight of authority indicates that only punitive and deterrent purposes should justify such enhancement. And while at one time enhancement was needed to ensure that the patentee received sufficient compensation, the statute now explicitly provides that the patentee will be awarded "damages adequate to compensate for the infringement." 35 U.S.C. § 284. The Court should thus hold that enhancement is designed to punish

and deter culpable conduct. Permitting enhancement for remedial purposes sets the bar too low, and unfairly threatens to make the "defendant who acted in ignorance or good faith * * * liable to the same penalty as the wanton and malicious pirate." *Seymour v. McCormick*, 57 U.S. 480, 488 (1854).

To ensure that § 284 advances punitive and deterrent purposes, Ericsson encourages the Court to hold, in line with prior case law, that enhancement is appropriate for willful or bad-faith infringement. It may be neither possible nor proper for the Court to fully delineate the contours of willful or bad-faith infringement in these appeals, but the Federal Circuit's decisions in *Bott* and *Read* provide a helpful starting point. Those cases list factors that may be considered, with "the totality of the circumstances," in "determining whether an infringer acted in [such] bad faith as to merit an increase in damages awarded against him." *Bott v. Four Star Corp.*, 807 F.2d 1567, 1572 (Fed. Cir. 1986); *Read Corp. v. Portec, Inc.*, 970 F.2d 816, 830 (Fed. Cir. 1992). These factors will doubtless require some revision in light of the Court's recent case law. In Ericsson's view, enhancement under § 284 should require, in addition to infringement, knowledge of the patent combined with culpable conduct. And culpable conduct could include deliberate copying, a refusal to investigate or engage with the patentee in good faith, or other behavior that fails to reflect a reasonable respect for intellectual property rights.

With a proper legal standard in place, the Federal Circuit's additional barriers to enhancement are not needed. While objective recklessness is certainly a sufficient condition for damages enhancement under § 284, it should not be a necessary condition. And

this Court's recent rejections of the clear-and-convincing standard and *de novo* review in the fee-award context mandate a similar rejection of the clear-and-convincing standard and *de novo* review in the enhancement context.

In short, the Court should chart a middle course in these appeals: tearing down much of the high wall that has been erected around § 284 by the Federal Circuit, but not razing that wall to its foundations. Enhancement of patent-infringement damages should be available in cases of willful or bad-faith infringement, but not otherwise. And while § 284 enhancement should not be employed for remedial purposes, it should be employed to encourage the presence, and to punish and deter the absence, of a reasonable respect for intellectual property rights.

ARGUMENT

I. THE FEDERAL CIRCUIT HAS ERECTED A PRACTICALLY INSURMOUNTABLE BAR TO THE AWARD OF ENHANCED DAMAGES

The statute authorizing enhanced damages for patent infringement provides simply that "the court may increase the damages up to three times the amount found or assessed." 35 U.S.C. § 284.

The absence of any explicit standard in the statute makes some judicial gloss inevitable and necessary. But the Federal Circuit has layered gloss upon gloss, and requirement upon requirement, until the present standard has become a virtually impenetrable wall protecting infringers from any genuine threat of enhanced damages—even when the infringers "knew of the patents," "knew or should have known" that their "actions would infringe," and "acted in a subjectively reckless manner with respect

to" their infringement. *Carnegie Mellon Univ. v. Marvell Tech. Group, Ltd.*, No. 14-1492, 2015 U.S. App. LEXIS 13622, at *36 (Fed. Cir. Aug. 4, 2015). This statute, which should make enhancement available to punish and deter culpable infringing conduct, has been rendered a virtual dead letter.

Willful infringement .... In the mid-1980s, Federal Circuit case law held that damages could be enhanced under § 284 in cases of "willful infringement" or those in which the infringer acted in "bad faith." *Yarway Corp. v. Eur-Control USA, Inc.*, 775 F.2d 268, 277 (Fed. Cir. 1985) ("It is well-settled that enhancement of damages must be premised on willful infringement or bad faith."). This was explicitly a *disjunctive* test. *See id.* ("Here the court specifically held that there existed no willful infringement, and thus we concern ourselves here only with the bad faith issue."); *Rite-Hite Corp. v. Kelley Co.*, 819 F.2d 1120, 1126 (Fed. Cir. 1987) (en banc) ("Whether or not 'willfulness' is found, the court has authority to consider the degree of culpability of the tortfeasor.").

In the mid-1990s, the Federal Circuit diminished the significance of the test's ostensible disjunction, holding that "'bad faith' is more correctly called 'bad faith infringement,' and it is merely a type of willful infringement." *Jurgens v. CBK, Ltd.*, 80 F.3d 1566, 1569-71 (Fed. Cir. 1996). Thus the standard for enhanced damages under § 284 came to focus singularly on willful infringement. *Id.* at 1571.

Even with the singular focus on willful infringement, the Federal Circuit acknowledged until the mid-2000s that the "[d]etermination of willfulness is made on consideration of the totality of circumstances," and may "include contributions of

several factors" measuring the infringer's culpability. *Knorr-Bremse Systeme Fuer Nutzfahrzeuge GmbH v. Dana Corp.*, 383 F.3d 1337, 1342-43 (Fed. Cir. 2004). That is, the court continued to stand by its observation that "'willfulness' in infringement, as in life, is not an all-or-nothing trait, but one of degree. It recognizes that infringement may range from unknowing, or accidental, to deliberate, or reckless, disregard of a patentee's legal rights." *Id.* at 1343 (citing *Rite-Hite*, 819 F.2d at 1125-26).

Requiring objective recklessness .... The Federal Circuit effected a sea change in the law of enhanced damages with *In re Seagate Tech., LLC*, 497 F.3d 1360 (Fed. Cir. 2007) (en banc). Rejecting a holistic, totality-of-the-circumstances approach to willful infringement, the court introduced a new objective/subjective two-prong test that required the patentee to prove, first, "that the infringer acted despite an objectively high likelihood that its actions constituted infringement of a valid patent." *Id.* at 1371. The infringer's actual knowledge, beliefs, and intentions are "not relevant to this objective inquiry." *Id.* If this "threshold objective standard is satisfied," then "the patentee must also demonstrate," second, "that this objectively defined risk" was subjectively "either known or so obvious that it should have been known to the accused infringer." *Id.* at 1371.

The Federal Circuit in *Seagate* left "it to future cases to further develop the application of this standard." *Id.* And subsequent cases have added to the gloss, explaining that the first prong—"objective recklessness"—"will not be found where the accused infringer's 'position is susceptible to a reasonable conclusion of no infringement.'" *Stryker Corp. v. Zimmer, Inc.*, 782 F.3d 649, 661 (Fed. Cir. 2015)

(citing *Uniloc USA, Inc. v. Microsoft Corp.*, 632 F.3d 1292, 1310 (Fed. Cir. 2011)). In addition, "objective recklessness" will not be found "when the infringer, whatever its state of mind at the time of its infringement, presents in the litigation a defense, including an invalidity defense, that is objectively reasonable (though ultimately rejected)." *Carnegie Mellon*, 2015 U.S. App. LEXIS 13622, at *36. And "present[ed] in the litigation" does not require that the defense "be presented to the jury," as the court has found "objectively reasonable" defenses that do "not make the cut for consuming the precious time and attention of the jury." *Id.* at *41-42.

Under the "objective recklessness" prong as developed by the Federal Circuit, an infringer actually intending to infringe is fully immunized from enhanced damages so long as it can muster in the litigation a defense (based on noninfringement or invalidity) that is not only a losing defense, but is judged to be less meritorious—and less worthy of consuming precious trial time—than the losing defenses actually presented to the jury. *Id.*

Subject to clear and convincing proof .... As it has developed, the first prong of the Federal Circuit's two-prong test raises a virtually insurmountable bar to the award of enhanced damages under § 284: patent litigation is complex and competent counsel typically can be expected, at the very least, to gin up a non-frivolous invalidity argument. *Id.*; *Stryker*, 782 F.3d at 662. Yet the Federal Circuit has raised the bar even higher, and has held that patentees must prove that the two-prong test for willful infringement is satisfied with *clear and convincing* evidence. *Seagate*, 497 F.3d at 1371; *Carnegie Mellon*, 2015 U.S. App. LEXIS 13622, at *36.

And reviewed *de novo* .... Prior to *Seagate*, the Federal Circuit had long held that "a finding of willful infringement" was fundamentally factual, and thus "reviewable under the clearly erroneous standard." *Bott v. Four Star Corp.*, 807 F.2d 1567, 1572 (Fed. Cir. 1986). And a district court's fact-based decision with respect to enhancement would "not be overturned absent a clear showing of abuse of discretion." *Rite-Hite*, 819 F.2d at 1126. In 2012, the Federal Circuit changed course, and held that—with respect to the first prong of its new willfulness test—the presence of objective recklessness is "best decided by the judge as a question of law subject to *de novo* review." *Bard Peripheral Vascular, Inc. v. W.L. Gore & Assocs., Inc.*, 682 F.3d 1003, 1007 (Fed. Cir. 2012); *Stryker*, 782 F.3d at 661.

Applying this new, many-layered gloss to § 284, the Federal Circuit has held that enhanced damages are unavailable as a matter of law whenever the infringer can "raise a substantial question as to the obviousness of the * * * patents," *Halo Elecs., Inc. v. Pulse Elecs., Inc.*, 769 F.3d 1371, 1382-83 (Fed. Cir. 2014), or is otherwise able to muster "good-faith invalidity defenses once litigation beg[ins]," *Global Traffic Techs., LLC v. Morgan*, No. 14-1537, 2015 U.S. App. LEXIS 9281, at *19-20 (Fed. Cir. June 4, 2015)—without any requirement "that the infringer had [any] defense in mind before the litigation," *Carnegie Mellon*, 2015 U.S. App. LEXIS 13622, at *41. In short, even when the infringer has knowledge of the patent and acts in bad-faith throughout the infringement period, no enhancement of damages is possible so long as the infringer's counsel can cobble together a Rule 11 invalidity argument just prior to

trial. *Cf.* FED. R. CIV. P. 11 (allowing sanctions for the assertion of unsupported defenses).

II. THE COURT'S PRECEDENTS INDICATE THAT THE BAR HAS BEEN SET TOO HIGH

Three of this Court's recent decisions—in *Octane*, *Highmark*, and *Commil*—suggest that § 284 cannot support the many-layered barrier that the Federal Circuit has erected on top of the statute's straightforward provision for the award of enhanced damages. *Octane*, 134 S. Ct. at 1752-56; *Highmark*, 134 S. Ct. at 1748; *Commil*, 135 S. Ct. at 1928-29.

1. *Octane* addressed the Federal Circuit's approach to 35 U.S.C. § 285, which provides that "[t]he court in exceptional cases may award reasonable attorney fees to the prevailing party." *Octane*, 134 S. Ct. at 1752. The Federal Circuit had devised an objective/subjective two-prong test for the award of attorney fees under § 285 that was much like the objective/subjective two-prong test it developed for the enhancement of damages under § 284. *See Brooks Furniture Manufacturing, Inc. v. Dutailier Int'l, Inc.*, 393 F.3d 1378, 1381 (Fed. Cir. 2005) ("[fees] may be imposed against the patentee only if both (1) the litigation is brought in subjective bad faith, and (2) the litigation is objectively baseless"); *see also Halo*, 769 F.3d at 1384 ("our willfulness test, as described in *Seagate* and *Bard*, and our old § 285 test, under *Brooks Furniture*, both were predicated on our interpretation of [the Court's precedent], which we believed required a two-step objective/subjective inquiry before either enhanced damages or attorneys' fees could be awarded") (O'Malley, J., concurring).

This Court rejected the Federal Circuit's two-prong gloss on § 285 as "unduly rigid," noting that it

"superimposes an inflexible framework onto statutory text that is inherently flexible." *Octane*, 134 S. Ct. at 1755-56. Looking to the statutory text, the Court found that "[i]t imposes one and only one constraint on the district courts' discretion to award attorney's fees in patent litigation: The power is reserved for 'exceptional' cases." *Id.* And construing that term in accordance with its ordinary meaning, the Court held "that an 'exceptional' case is simply one that stands out from others with respect to the substantive strength of a party's litigating position (considering both the governing law and the facts of the case) or the unreasonable manner in which the case was litigated." *Id.* at 1756. Furthermore, courts must make this exceptional-case determination "in the case-by-case exercise of their discretion, considering the totality of the circumstances." *Id.*

The Court in *Octane* also "reject[ed] the Federal Circuit's requirement that patent litigants establish their entitlement to fees under § 285 by 'clear and convincing evidence.'" *Id.* at 1758. The Court noted that "patent-infringement litigation has always been governed by a preponderance of the evidence standard," and that "nothing in § 285 justifies" application of the clear-and-convincing evidentiary burden to fee award determinations. *Id.*

2. *Highmark* addressed the same provision, and rejected the Federal Circuit's decision to review § 285 determinations—at least the objective prong of those determinations—*de novo* on appeal. 134 S. Ct. at 1748. Noting that, *inter alia*, the statute "emphasizes the fact that the determination is for the district court," and the relevant inquiry is "rooted in factual determinations," this Court concluded that "the

exceptional-case determination is to be reviewed only for abuse of discretion." *Id.* at 1748-49.

3. *Commil* addressed a different question: "whether a good-faith belief in invalidity is a defense to induced infringement." 135 S. Ct. at 1925. The Court concluded that "[i]t is not." *Id.* at 1928. Because "infringement and invalidity are separate matters under patent law," the Court reasoned that "permitting a defense of belief in invalidity" would improperly "conflate the issues of infringement and validity." *Id.* The Court further observed that "[a]llowing this new defense" to induced infringement "would also undermine [the] presumption" of patent validity "to a drastic degree." *Id.* at 1928-29. That presumption requires infringers to prove patent invalidity by clear and convincing evidence. Permitting a mere good-faith belief in invalidity to serve as a defense to infringement would "circumvent" this high evidentiary bar, and "undermine" the statutory presumption. *Id.*

Each of these cases casts doubt on the Federal Circuit's many-layered approach to § 284. *Octane* suggests that the objective/subjective two-prong test applied by the Federal Circuit "superimposes an inflexible framework onto statutory text that is inherently flexible." 134 S. Ct. at 1755-56. *Octane* also suggests that, as in § 285, nothing in § 284 justifies application of the clear-and-convincing burden of proof to enhancement findings. *Id.* at 1758. *Highmark* similarly calls into question the Federal Circuit's decision to review § 284 determinations *de novo*. 134 S. Ct. at 1748-49. Finally, *Commil* suggests that, contrary to the Federal Circuit's current case law, a non-frivolous (though losing) argument that a patent is invalid cannot be an objectively reasonable

defense to infringement. 135 S. Ct. at 1928-29. Thus, even under the Federal Circuit's current approach to § 284 enhancement, a reasonable though ultimately unfounded belief in invalidity cannot supply the requisite "susceptib[ility] to a reasonable conclusion of no infringement." *Stryker*, 782 F.3d at 661.

III. THE UNAVAILABILITY OF ENHANCED DAMAGES HAS FOSTERED PATENT HOLD-OUT AND DIMINISHED RESPECT FOR INTELLECTUAL PROPERTY RIGHTS

The Federal Circuit's current approach to § 284 is not only misguided as a matter of law; it is misguided as a matter of policy. Infringers have taken notice of the new protections that they have been afforded, and the Federal Circuit's many-layered gloss on damages enhancement has thus had the practical effect of fostering patent "hold-out" and diminishing respect for patent rights.

Patent hold-out describes the "practice of companies routinely ignoring patents and resisting patent owner demands because the odds of getting caught are small." Colleen Chien, *Holding Up and Holding Out*, 21 MICH. TELECOMM. & TECH. L. REV. 1 (2014); *see also Apple Inc. v. Motorola, Inc.*, 757 F.3d 1286, 1333 (Fed. Cir. 2014) (Rader, C.J., dissenting-in-part) (describing hold-out as the circumstance in which the user of a patented technology "seek[s] to avoid a license based on the value that the technological advance contributed to the prior art"); *In re Innovatio IP Ventures*, No. 11-CV-9308, 2013 U.S. Dist. LEXIS 144061, at *70 (N.D. Ill. Sept. 27, 2013). Patent hold-out is necessarily "disruptive," and is particularly pernicious in the context of standard-essential patents and the standard-development regime. *Apple*, 757 F.3d at 1333.

The removal of any genuine threat of damages enhancement has increased the frequency of patent hold-out, and emboldened infringers to reject good-faith attempts to reach licensing agreements. Infringers understand that under the Federal Circuit's current approach to enhanced damages, they will almost certainly be liable for no more than a reasonable royalty. The best course of action for the infringer is thus often inaction—this allows for the possibility that the patent holder will not have the resources to litigate. Indeed, recent research reflects that, upon receiving written notice of prospective infringement, many companies "do nothing." Colleen Chien, *The Best Way to Fight a Patent Demand May Be to do Nothing*, WALL STREET JOURNAL, available at http://www.wsj.com/articles/the-best-way-to-fight-a-patent-demand-may-be-to-do-nothing-1448248065 (Nov. 23, 2015). This approach makes litigation a necessity. *See, e.g., Wisconsin Alumni Research Foundation v. Apple Inc.*, No. 14-CV-0062 (Dkt. No. 1, ¶ 17) (W.D. Wis. 2014) ("Apple has stated that it is the policy of the company not to accept or consider proposals regarding licensing from outside entities * * * for any purpose, making initiation of this lawsuit a necessity.").

The new, practically insurmountable bar to enhanced damages thus improperly encourages a diminished respect for intellectual property rights.

IV. BUT IN DECIDING THIS CASE, THE COURT SHOULD NOT SET THE BAR TOO LOW

The Federal Circuit has set the bar for enhanced damages too high, and in light of *Octane*, *Highmark*, and *Commil*, Ericsson encourages the Court to reject the Federal Circuit's current approach to § 284.

Nevertheless, Ericsson encourages the Court to ensure that the new bar is not set too low.

A. District Courts Should Have a Standard to Guide the Enhancement of Damages

Ericsson expects that some *amici* will argue (with petitioners) that, because § 284 contains no explicit standard, the Court "should adhere to the plain meaning of the statute," and simply "leave the discretion to enhance damages in the capable hands of the district courts." *Seagate*, 497 F.3d at 1377 (Gajarsa, J., concurring). While district courts are certainly capable of exercising proper discretion in this area, Ericsson urges the Court not to reverse the Federal Circuit's current approach to § 284 without providing guidance as to the standard that must control the discretionary enhancement of damages.

As an initial matter, the Court has made clear that the fact that an award "is left to the district court's discretion * * * does not mean that no legal standard governs that discretion." *Martin v. Franklin Capital Corp.*, 546 U.S. 132, 139 (2005). Indeed, "[a]lthough the text of the provision does not specify any limits upon the district courts' discretion * * *, in a system of laws discretion is rarely without limits." *Independent Fed'n of Flight Attendants v. Zipes*, 491 U.S. 754, 758-59 (1989). A discretionary determination is not subject to the district court's "inclination, but to its judgment; and its judgment is to be guided by sound legal principles." *Martin*, 546 U.S. at 139 (citation omitted). And these discretion-limiting legal principles are to be derived by the Court from the "large objectives" of the statutory provision at issue. *Id.* at 139-40.

In addition, the Court has also made clear that Congress is "presumed to be aware" of the judicial

background against which it legislates. *Lorillard v. Pons*, 434 U.S. 575, 580-81 (1978). And in contrast to the attorney-fee provision of § 285, as well as some of the other provisions of § 284—which were entirely new and carried no judicial gloss—the statutory provision for enhanced damages traces its lineage back to 1836. *Seagate*, 497 F.3d at 1368-69; 35 U.S.C. § 284; Act of Aug. 1, 1946, 60 Stat. 778; Patent Act of 1870, ch. 230, § 59, 16 Stat. 198, 207 (1870) ("the court may enter judgment thereon for any sum above the amount found by the verdict as the actual damages sustained, according to the circumstances of the case, not exceeding three times the amount of such verdict, together with the costs"); Patent Act of 1836, ch. 357, 5 Stat. 117 (1836) ("it shall be in the power of the court to render judgment for any sum above the amount found by such verdict * * * not exceeding three times the amount thereof, according to the circumstances of the case"); *cf. GM Corp. v. Devex Corp.*, 461 U.S. 648, 653-54 (1983) (noting that, regarding the prejudgment-interest provision in § 284, "the predecessor statute did not contain any reference to interest"). The extensive history of decisions interpreting these prior statutory provisions should inform the damages-enhancement standard adopted by the Court in this case. *GM*, 461 U.S. at 654; *Lorillard*, 434 U.S. at 580-81.

Thus, the fact that § 284 itself provides no explicit legal standard does not mean that enhancement is governed by no legal standard. And the fact that enhancement under § 284 is not limited to "exceptional" cases—as are attorney fee awards under § 285—does not mean that damages enhancement is subject to a lower standard, or to a broader discretion, than a fee award. It simply

means that the Court must look to the large objectives for enhancement, and to the historical judicial approach to enhancement, to find the legal principles that must control the district court's exercise of discretion in this context.

B. The Standard Should Advance the Punitive and Deterrent Purposes of Damages Enhancement

Ericsson expects that some *amici* will further argue (with petitioners) that the large objectives for and historical judicial approach to enhancement suggest a standard that encompasses both punitive *and* remedial purposes for damages enhancement.

To be sure, language in some of the decisional authority suggests that—at an earlier time—damages for patent infringement could be enhanced for remedial as well as punitive reasons. *Seagate*, 497 F.3d at 1378-79 (Gajarsa, J., concurring) (collecting cases); *Teese v. Huntingdon*, 64 U.S. 2, 9 (1860) ("[I]f, in the opinion of the court, the defendant has not acted in good faith, or has caused unnecessary expense and injury to the plaintiff, the court may render judgment for a larger sum, not exceeding three times the amount of the verdict."). Nevertheless, Ericsson encourages the Court to conclude that enhancement of patent-infringement damages under § 284 advances only punitive and deterrent purposes. And the standard adopted by the Court should advance only those purposes.

1. First, the relevant case law has long focused on punitive and deterrent purposes as the principal justification for the statutory enhancement of patent-infringement damages.

In *Seymour v. McCormick*, 57 U.S. 480 (1854), this Court noted that treble damages for patent infringement was once treated as "a horizontal rule

equally affecting all cases, without regard to their peculiar merits." *Id.* at 488. Thus, the "defendant who acted in ignorance or good faith * * * was made liable to the same penalty with the wanton and malicious pirate." *Id.* "This rule," the Court concluded, "was manifestly unjust. For there is no good reason why taking a man's property in an invention should be trebly punished, while the measure of damages as to other property is single and actual damages." *Id.* at 488-89. In order "to obviate this injustice," the 1836 statute committed the "power to inflict vindictive or punitive damages" to the "discretion and judgment of the court within the limit of trebling the actual damages found by the jury." *Id.* at 489.

The 1836 statute granted this punitive power with the provision that: "it shall be in the power of the court to render judgment for any sum above the amount found by such verdict * * * not exceeding three times the amount thereof, according to the circumstances of the case." Patent Act of 1836, ch. 357, 5 Stat. 117 (1836). That provision is the original predecessor to § 284, and this Court's explanation of the punitive purposes for enhancement in *Seymour* should inform a similar analysis in these appeals.

Other authority from this Court supports the conclusion that enhancement under § 284 is designed to advance punitive and deterrent purposes. *See Root v. Ry. Co.*, 105 U.S. 189, 196 (1882) ("[T]he Patent Act of 1836 confined the jury to the assessment of actual damages, leaving it to the discretion of the court to inflict punitive damages to the extent of trebling the verdict."); *Tilghman v. Proctor*, 125 U.S. 136, 143-44 (1888) ("[T]he court may, whenever the circumstances of the case appear to require it, inflict

vindictive or punitive damages, by rendering judgment for not more than thrice the amount of the verdict."); *Exxon Shipping Co. v. Baker*, 554 U.S. 471, 506-507 (2008) (listing § 284 as a punitive-damages provision).

The great weight of Federal Circuit precedent supports the same conclusion. *See Jurgens v. CBK, Ltd.*, 80 F.3d 1566, 1570 (Fed. Cir. 1996) ("Because increased damages are punitive, the requisite conduct for imposing them must include some degree of culpability."); *Read Corp. v. Portec, Inc.*, 970 F.2d 816, 831 (Fed. Cir. 1992) ("While dicta suggests that infringement damages may be enhanced solely by reason of misconduct during litigation, such dictum is contrary to our precedent that 'if infringement [is] * * * innocent, increased damages are not awardable for the infringement.'"); *Beatrice Foods Co. v. New Eng. Printing & Litho. Co.*, 923 F.2d 1576, 1579 (Fed. Cir. 1991) ("Under our cases, enhanced damages may be awarded only as a penalty for an infringer's increased culpability * * * Damages cannot be enhanced to award the patentee additional compensation to rectify what the district court views as an inadequacy in the actual damages awarded."); *Mathis v. Spears*, 857 F.2d 749, 754 (Fed. Cir. 1988) ("Provisions for increased damages * * * are available as deterrents to blatant, blind, willful infringement of valid patents."); *Rite-Hite*, 819 F.2d at 1125-26 ("an economic deterrent to the tort of infringement").

Other authority further confirms that damages enhancement "is triggered only when the infringer's conduct warrants an exemplary award." 7-20 Chisum on Patents § 20.03 (2015); *see also* S. Rep. No. 79-1503, at 2 (1946) ("[D]iscretion to award triple

damages, will discourage infringement of a patent by anyone thinking that all he would be required to pay if he loses the suit would be a royalty.")

2. Second, while some authority suggests that the 1836 statute might also have permitted enhancement for remedial purposes—when, for example, the actual damages alone were not adequate to compensate for the infringement—there is no longer any need for § 284 to play that role.

In the 1860 *Teese* decision, for example, the Court indicated that damages enhancement under the original statute might be appropriate if the infringer "caused unnecessary expense and injury" to the patentee. 64 U.S. at 9. But as Judge Gajarsa explained in his *Seagate* concurrence, the former division between law and equity meant that "actual damages provable at law—though not 'inadequate' in the equitable sense—could nevertheless be less than sufficient to compensate the patentee." 497 F.3d at 1378. Thus some need for enhancement of damages to play a remedial role used to exist. Significantly, the division between law and equity is no more, and the statute now explicitly requires that "[u]pon finding for the claimant the court shall award the claimant damages adequate to compensate for the infringement * * * " 35 U.S.C. § 284.

As the Federal Circuit noted in *Beatrice*, the "first paragraph [of § 284] requires that the damages be 'adequate to compensate for the infringement.' Where the infringer's own conduct prevented the patentee from accurately determining the damages, or made it more difficult for the patentee to do so, the district court may resolve all doubts against the infringer and determine damages on the best available evidence." 923 F.2d at 1579. Furthermore,

to the extent that the infringer's conduct causes "unnecessary expense" in the litigation, *Teese*, 64 U.S. at 9, those expenses may potentially be recoverable as attorney fees under § 285 or as sanctions under Rule 11, *Octane*, 134 S. Ct. at 1756; FED. R. CIV. P. 11.

There is thus no longer any pressing need—if there ever was one—to look to damages enhancement under § 284 for remedial purposes.

The "majority rule" has long been that an award of enhanced damages under § 284 is appropriate only to punish and deter culpable infringing conduct, *Seagate*, 497 F.3d at 1384 (Gajarsa, J., concurring), and Ericsson encourages the Court to maintain the line of authority stretching back to *Seymour*, 57 U.S. at 488-89. Permitting enhancement for remedial purposes sets the bar too low, and unfairly threatens to make the "defendant who acted in ignorance or good faith * * * liable to the same penalty as the wanton and malicious pirate." *Id.* at 488.

C. To Advance These Purposes, the Standard Should Require Willful or Bad-Faith Infringement—Including Knowledge of the Patent Combined With Culpable Conduct

To ensure that § 284 advances the proper punitive and deterrent purposes, the Court should hold, in line with many of its prior cases, that enhancement is appropriate for willful or bad-faith infringement. *See Aro Mfg. Co. v. Convertible Top Replacement Co.*, 377 U.S. 476, 508 (1964) ("[a patentee] could in a case of willful or bad-faith infringement recover punitive or 'increased' damages under the statute's trebling provision"); *Dowling v. United States*, 473 U.S. 207, 227 n.19 (1985) ("Among the available remedies are treble damages

for willful infringement."); *Teese*, 64 U.S. at 9 ("[If] the defendant has not acted in good faith, * * * the court may render judgment for larger sum, not exceeding three times the amount of the verdict."); *Seymour*, 57 U.S. at 488 (indicating that treble damages are appropriate for "wanton" or "malicious" infringement).

That was the Federal Circuit's longstanding rule decades before it began adding its many superfluous layers of gloss to the language of § 284. *See Yarway*, 775 F.2d at 277 ("It is well-settled that enhancement of damages must be premised on willful infringement or bad faith."); *Beatrice*, 923 F.2d at 1579 ("Enhanced damages may be awarded only as a penalty for an infringer's increased culpability, namely willful infringement or bad faith.").

The Court's cases suggest that this is a disjunctive test—willful *or* bad-faith infringement. *Aro*, 377 U.S. at 508. Ericsson nevertheless encourages the Court to confirm, as the Federal Circuit pointed out in *Jurgens*, that the bad faith at issue should be "related to the underlying act of infringement" and reflect on "the culpability of the infringer." 80 F.3d at 1570. It should, in short, constitute "bad faith infringement." *Id.* at 1571; *see also Aro*, 377 U.S. at 508. This is because "[o]nly a culpable infringer can be held liable for increased damages, not an innocent one." *Jurgens*, 80 F.3d at 1570-71; *see also Seymour*, 57 U.S. at 488-89 (rejecting treble damages for a "defendant who acted in ignorance or good faith").

It may be neither possible nor proper for the Court to fully delineate the contours of willful or bad-faith infringement in these appeals. But the Federal Circuit's pre-*Seagate* decisions in *Bott* and *Read*

provide a helpful starting point for the Court. Those cases list factors that may be considered, with "the totality of the circumstances," in "determining whether an infringer acted in [such] bad faith as to merit an increase in damages awarded against him." *Bott*, 807 F.2d at 1572; *Read*, 970 F.2d at 826. These factors include, most significantly: "(1) whether the infringer deliberately copied the ideas or design of another; [and] (2) whether the infringer, when he knew of the other's patent protection, investigated the scope of the patent and formed a good-faith belief that it was invalid or that it was not infringed." *Bott*, 807 F.2d at 1572; *Read*, 970 F.2d at 827.

These factors will doubtless require some revision to account for the Court's recent decisional authority. *Commil*, for example, suggests that—given the required presumption of patent validity—even a good-faith belief that a patent is invalid will not justify or excuse intentional infringement of the patent. 135 S. Ct. at 1928-29. Even so, there is no apparent reason that a good-faith belief that a patent is invalid cannot inform the district court's evaluation of the degree of culpability of a particular infringer's conduct. As the Federal Circuit wisely explained in *Read*: "[t]he paramount determination in deciding to grant enhancement and the amount thereof [should be] the egregiousness of the defendant's conduct based on all the facts and circumstances." 970 F.2d at 826.[2]

---

[2] Even when enhancement is appropriate under § 284, something less than treble damages may be awarded by the district court. "An award of enhanced damages for infringement, as well as the extent of the enhancement, is committed to the discretion of the trial court." *Read*, 970 F.2d at 826.

In Ericsson's view, this means that damages enhancement under § 284 should require, in addition to infringement, knowledge of the patent combined with culpable conduct. And in terms of culpable conduct, "[t]he standards of behavior by which a possible infringer evaluates adverse patents should be the standards of fair commerce, including reasonableness of the actions taken in the particular circumstances." *Seagate*, 497 F.3d at 1385 (Newman, J., concurring). The standards should further be consistent with the presumption of patent validity. *Commil*, 135 S. Ct. at 1928-29. But Ericsson agrees that "the fundamental issues [should remain] the reasonableness, or in turn the culpability, of commercial behavior that violates legally protected property rights." *Seagate*, 497 F.3d at 1385 (Newman, J., concurring); *Jurgens*, 80 F.3d at 1571.

D. With a Proper Standard in Place, the Federal Circuit's Additional Barriers to Enhancement Are Not Needed

Should the Court hold that damages enhancement under § 284 is appropriate for willful or bad-faith infringement, and that this standard in turn requires at least infringement, knowledge of the patent, and culpable conduct—that is, conduct that fails to reflect a reasonable respect for intellectual property rights—then the additional barriers to enhancement that the Federal Circuit has erected in *Seagate* and its progeny are not needed.

No objective-recklessness requirement .... Objective recklessness is certainly a sufficient condition for the award of enhanced damages under § 284, but it should not be a necessary condition. As Judge Newman presciently noted in her concurrence in *Seagate*: "It cannot be the court's intention to

tolerate the intentional disregard or destruction of the value of the property of another, simply because that property is a patent; yet the standard of 'recklessness' appears to ratify intentional disregard, and to reject objective standards requiring a reasonable respect for property rights." 497 F.3d at 1385 (Newman, J., concurring). The "objective recklessness" requirement has indeed come to ratify intentional disregard—the Federal Circuit has since held that, under this standard, an infringer actually intending to infringe is fully immunized from enhanced damages so long as its counsel can present a reasonable noninfringement or invalidity argument in the litigation. *Carnegie Mellon*, 2015 U.S. App. LEXIS 13622, at *36, 41-42. This virtually eliminates any genuine threat of enhancement in almost every case of infringement, and thus drastically undermines the deterrent effect of § 284.[3] *Rite-Hite*, 819 F.2d at 1125.

No clear-and-convincing requirement .... This Court's rejection of a clear-and-convincing standard of proof for § 285 determinations mandates a similar rejection of that standard of proof for § 284 determinations. *Octane*, 134 S. Ct. at 1758. Indeed, "patent-infringement litigation has always been governed by a preponderance of the evidence standard," and § 284—like § 285—"imposes no

---

[3] The Federal Circuit's recent focus on litigation-generated *invalidity* arguments as precluding a finding of objective recklessness for *infringement* also undermines the presumption of patent validity. *Carnegie Mellon*, 2015 U.S. App. LEXIS 13622, at *36; *Global Traffic*, 2015 U.S. App. LEXIS 9281, at *19-20; *Halo*, 769 F.3d at 1382-83; *Commil*, 135 S. Ct. 1928-29.

[different] evidentiary burden, much less such a high one" as the clear-and-convincing standard. *Id.*

Application of that high burden of proof is even further out of place in the § 284 context. With respect to patent litigation, the clear-and-convincing standard is implemented to protect the presumption of patent validity: prospective infringers must start with a presumption of validity, and prove otherwise with clear and convincing evidence. *Commil*, 135 S. Ct. at 1928-29. Applying the clear-and-convincing standard in this context flips the standard on its head—now infringers may effectively start with a presumption of invalidity, and, to be eligible for enhanced damages, patentees must prove that presumption unreasonable with clear and convincing evidence. *Seagate*, 497 F.3d at 1371; *Carnegie Mellon*, 2015 U.S. App. LEXIS 13622, at *36. This use of the clear-and-convincing evidentiary burden lessens the force of the presumption of validity "to a drastic degree." *Commil*, 135 S. Ct. at 1929.

No *de novo* review .... This Court's rejection of *de novo* review for § 285 determinations also mandates a similar rejection of *de novo* review for § 284 determinations. *Highmark*, 134 S. Ct. at 1748-49. Much like § 285, § 284 "emphasizes the fact that the determination is for the district court," and the enhancement "inquiry generally is, at heart, 'rooted in factual determinations.'" *Id.* at 1749 (citing *Cooter & Gell v. Hartmarx Corp.*, 496 U.S. 384, 401 (1990)); *Bott*, 807 F.2d at 1572; *Rite-Hite*, 819 F.2d at 1126. Thus, as with § 285 award determinations, § 284 enhancement determinations should "be reviewed only for abuse of discretion." *Highmark*, 134 S. Ct. at 1748. That rule would accord with the Federal Circuit's longstanding approach to the issue—before

its abrupt about-face in 2012. *Rite-Hite*, 819 F.2d at 1126; *Bard*, 682 F.3d at 1007.

Nevertheless, the Federal Circuit's recent decision to review § 284 determinations *de novo* is perhaps the least troubling of its post-*Seagate* glosses on damages enhancement, and the appropriate standard of review may well depend on the substantive standard that the Court adopts in these appeals. Whatever standard of review the Court ultimately approves, however, it should remain true that legal errors are subject to correction on appeal: "A district court would necessarily abuse its discretion if it based its ruling on an erroneous view of the law * * *." *Cooter*, 496 U.S. at 405; *Highmark*, 134 S. Ct. at 1748.

CONCLUSION

For the reasons set forth above, in the *Halo* and *Stryker* appeals this Court should reject the Federal Circuit' many-layered gloss on § 284, which has erected a practically insurmountable bar to the award of enhanced damages. In particular, the Court should reject the Federal Circuit's application of an objective/subjective two-prong test for damages enhancement, as well as the Federal Circuit's holding that patentees must prove their entitlement to enhancement with clear and convincing evidence. Nevertheless, in rejecting the Federal Circuit's current approach to enhanced damages, the Court should ensure that the new bar is not set too low. In particular, the Court should articulate a standard to guide the district court's enhancement of damages. This standard should advance the punitive and deterrent purposes of damages enhancement, and should thus disjunctively require willful or bad-faith

infringement—including, in either case, knowledge of the patent combined with culpable conduct.

Enhancement of patent-infringement damages should be available under § 284 to encourage the presence, and to punish and deter the absence, of a reasonable respect for intellectual property rights.

Respectfully submitted,

Mike McKool, Jr.
Counsel of Record
McKool Smith, P.C.
300 Crescent Court, Suite 1500
Dallas, TX 75201
(214) 978-4900
mmckool@mckoolsmith.com

Joel L. Thollander
John B. Campbell
(Admission Pending)
McKool Smith, P.C.
300 W. 6th Street, Suite 1700
Austin, TX 78701
(512) 692-8700
jthollander@mckoolsmith.com
jcampbell@mckoolsmith.com

DECEMBER 2015

Nos. 14-1513 & 14-1520

In the
Supreme Court of the United States

HALO ELECTRONICS, INC.,
Petitioner,

v.

PULSE ELECTRONICS, INC., ET AL.,
Respondents.

STRYKER CORPORATION, ET AL.,
Petitioners,

v.

ZIMMER, INC., ET AL.,
Respondents.

On Writs of Certiorari to the United States Court of Appeals for the Federal Circuit

BRIEF FOR *AMICI CURIAE* GOOGLE INC., CISCO SYSTEMS, INC., VERIZON COMMUNICATIONS INC., AND SALESFORCE.COM, INC., IN SUPPORT OF RESPONDENTS

PAUL D. CLEMENT
Counsel of Record
D. ZACHARY HUDSON
MICHAEL D. LIEBERMAN
BANCROFT PLLC
500 New Jersey Ave, NW
Seventh Floor
Washington, DC 20001
(202) 234-0090
pclement@bancroftpllc.com

January 20, 2016 *Counsel for Amici Curiae*

CORPORATE DISCLOSURE STATEMENT

Google Inc. is a wholly owned subsidiary of Alphabet Inc.; accordingly, Alphabet Inc. has more than 10% ownership of Google Inc. No publicly held corporation owns more than 10% of Alphabet Inc.'s stock.

Cisco Systems, Inc., has no parent corporation and no publicly traded corporation owns 10% or more of its stock.

salesforce.com, inc. has no parent corporation and no publicly traded corporation owns 10% or more of its stock.

Verizon Communications Inc. has no parent corporation and no publicly traded corporation owns 10% or more of its stock.

TABLE OF CONTENTS

CORPORATE DISCLOSURE STATEMENT i
TABLE OF AUTHORITIES iii
STATEMENT OF INTEREST 1
SUMMARY OF ARGUMENT 2
ARGUMENT 4
I. *Seagate* Provides The Correct Standard For Awarding Enhanced Damages Under Section 284 4
II. This Court Should Reject Petitioners' Invitation To Return The Law Of Enhanced Patent Damages To The Pre-*Seagate* Status Quo 13
A. The pre-*Seagate* Standard 13
B. The pre-*Seagate* Standard Eroded the Attorney-Client Privilege and Undermined the Goals of the Patent System 15
C. Petitioners' Proposed Standards Would Recreate the Very Problems *Seagate* Solved 22
III. *Octane* and *Highmark* Have no Bearing on *Seagate* 26
IV. At A Minimum, Any Test For Enhanced Damages Must Contain An Objective Component 29
CONCLUSION 33

TABLE OF AUTHORITIES

Cases

Amsted Indus. Inc.
v. Buckeye Steel Castings Co.,
24 F.3d 178 (Fed. Cir. 1994) 13

Aro Mfg. Co.
v. Convertible Top Replacement Co.,
377 U.S. 476 (1964) 9

Bard Peripheral Vascular, Inc.
v. W.L. Gore & Associates, Inc.,
776 F.3d 837 (Fed. Cir.) 12

Bard Peripheral Vascular, Inc.
v. W.L. Gore & Associates, Inc.,
136 S. Ct. 189 (2015) 12

BMW of N. Am., Inc. v. Gore,
517 U.S. 559 (1996) 8, 9, 29

Carnegie Mellon Univ.
v. Marvell Tech. Grp., Ltd.,
807 F.3d 1283 (Fed. Cir. 2015) 22

Commil USA, LLC v. Cisco Sys., Inc.,
135 S. Ct. 1920 (2015) 26

eBay Inc. v. MercExchange, L.L.C.,
547 U.S. 388 (2006) 25

Exxon Shipping Co. v. Baker,
554 U.S. 471 (2008) 9

Farmer v. Brennan,
511 U.S. 825 (1994) 10

Finisar Corp. v. DirecTV Grp., Inc.,
523 F.3d 1323 (Fed. Cir. 2008) 15

Fort James Corp. v. Solo Cup Co.,
412 F.3d 1340 (Fed. Cir. 2005) 16

Highmark Inc. v. Allcare Health Management System, Inc.,
134 S. Ct. 1744 (2014) 27, 30

Honda Motor Co. v. Oberg,
512 U.S. 415 (1994) 29, 30, 31

Indep. Fed'n of Flight Attendants v. Zipes,
491 U.S. 754 (1989) 28

Jurgens v. CBK, Ltd.,
80 F.3d 1566 (Fed. Cir. 1996) 7

Kewanee Oil Co. v. Bicron Corp.,
416 U.S. 470 (1974) 21

Kloster Speedsteel AB v. Crucible Inc.,
793 F.2d 1565 (Fed. Cir. 1986) 14

Knorr-Bremse Systeme Fuer Nutzfahrzeuge GmbH v. Dana Corp.,
383 F.3d 1337 (Fed. Cir. 2004) 15, 20

Martin v. Franklin Capital Corp.,
546 U.S. 132 (2005) 28

Octane Fitness, LLC v. ICON Health & Fitness, Inc.,
134 S. Ct. 1749 (2014) 7, 26, 27

Pierce v. Underwood,
487 U.S. 552 (1988) 31

Raylon, LLC v. Complus Data Innovations, Inc.,
700 F.3d 1361 (Fed. Cir. 2012) 29

Read Corp. v. Portec, Inc.,
970 F.2d 816 (Fed. Cir. 1992) 7, 21

Safeco Ins. Co. of Am. v. Burr,
551 U.S. 47 (2007) 10, 11, 22

In re Seagate Technology, LLC,
497 F.3d 1360 (Fed. Cir. 2007) 2, 4, 13, 15

Sensonics, Inc. v. Aerosonic Corp.,
81 F.3d 1566 (Fed. Cir. 1996) 9

Seymour v. McCormick,
57 U.S. 480 (1853) 9

Teva Pharm. USA, Inc. v. Sandoz, Inc.,
135 S. Ct. 831 (2015) 30

Underwater Devices Inc. v. Morrison-Knudsen Co.,
717 F.2d 1380 (Fed. Cir. 1983) 13, 14

Upjohn Co. v. United States,
449 U.S. 383 (1981) 18

Constitutional Provision

U.S. Const. art. I, §8, cl.8 21

Statutes

35 U.S.C. §284 ..... 1, 2, 4, 6

35 U.S.C. §285 ..... 27, 29

35 U.S.C. §298 ..... 15, 25

Leahy-Smith America Invents Act,
Pub. L. No. 112-29, 125 Stat. 284 (2011) 15

Other Authorities

FTC, *To Promote Innovation: The Proper Balance of Competition and Patent Law and Policy* (2003) 20

W. Page Keeton et al., *Prosser and Keeton on the Law of Torts* (5th ed. 1984) 26

Mark A. Lemley & A. Douglas Melamed, *Missing the Forest for the Trolls*, 113 Colum. L. Rev. 2117 (2013) 25, 26

Mark A. Lemley & Ragesh K. Tangri, *Ending Patent Law's Willfulness Game*, 18 Berkeley Tech. L.J. 1085 (2003) 18, 19

Kimberly A. Moore, *Empirical Statistics on Willful Patent Infringement*, 14 Fed. Cir. B. J. 227 (2005) 16, 32

Kimberly A. Moore, *Judges, Juries, and Patent Cases—An Empirical Peek Inside the Black Box*, 99 Mich. L. Rev. 365 (2000) 17

Nat'l Research Council, *A Patent System for the 21st Century* (Stephen A. Merrill, et al. eds., 2004) 17, 20

Daniel Nazer, *Deep Dive: Why We Need Venue Reform to Restore Fairness to Patent Litigation*, Electronic Frontier Foundation (Aug. 17, 2015), https://perma.cc/VNY3-9HX7 31

Matthew D. Powers & Steven C. Carlson, *The Evolution and Impact of the Doctrine of Willful Patent Infringement*, 51 Syracuse L. Rev. 53 (2001) 19

Restatement (Second) of Torts (1979) 9, 10

Christopher B. Seaman, *Willful Patent Infringement & Enhanced Damages After* In Re Seagate, 97 Iowa L. Rev. 417 (2012) 12, 22

STATEMENT OF INTEREST[1]

Amici Google, Cisco Systems, salesforce.com, and Verizon are leading providers of high-technology products and services and leaders in their respective fields. Having obtained patents based on their own research and development efforts, and also having spent considerable resources defending themselves against hundreds of meritless infringement claims, *amici* support a balanced patent system that discourages both infringement and meritless allegations of infringement. *Amici* believe that a construction of 35 U.S.C. §284 that makes enhanced damages available only for the most egregious infringing conduct, and maintaining an objective component as a necessary element of an enhanced damages determination, are critical to that balance. *Amici* also believe that the need for balance in the patent system has never been more important. The ever-increasing number of patent assertion entities (PAEs) and suits brought by those entities—often in forums singled out as unfavorable for accused infringers—underscores the need for limiting the

---

[1] Pursuant to Supreme Court Rule 37.6, counsel for *amici* represent that they authored this brief in its entirety and that none of the parties or their counsel, nor any other person or entity other than *amici* or their counsel, made a monetary contribution intended to fund the preparation or submission of this brief. Pursuant to Rule 37.3(a), counsel for *amici* represent that all parties have consented to the filing of this brief. The parties in No. 14-1513 and petitioners in No. 14-1520 filed letters with the Clerk granting blanket consent; written consent of respondents in No. 14-1520 is being submitted contemporaneously with this brief.

availability of enhanced damages to a predictable universe of cases where they are truly warranted.

SUMMARY OF ARGUMENT

Before the Federal Circuit's decision in *In re Seagate Technology, LLC*, 497 F.3d 1360 (Fed. Cir. 2007), the patent system was plagued by dysfunction, imbalance, and perverse incentives. These problems stemmed in part from the pre-*Seagate* standard for enhanced damages under 35 U.S.C. §284. The pre-*Seagate* standard focused on whether, at the time of infringement, defendants reasonably believed they were not infringing a valid patent. In order to meet this burden, companies in the pre-*Seagate* era were forced to obtain opinions from outside counsel regarding whether their conduct was permissible whenever they learned about new patents. Then, if they were sued for infringement, they would introduce the opinion to demonstrate that they complied with the then-prevailing standard in an effort to avoid enhanced damages.

This *de facto* opinion-of-counsel requirement created substantial mischief. For one, the requirement imposed massive costs on technology companies like *amici*, who receive notice of new patents on a continual basis. Even more troubling, producing an opinion of counsel during litigation was construed to waive attorney-client privilege. This created imbalance in patent cases and exerted undue settlement pressures on accused infringers. The opinion-of-counsel requirement also eroded the privilege itself, eliminating the promised confidentiality that ensures full and frank discussions between attorney and client. Indeed, the pre-*Seagate*

status quo was sufficiently dire that—in a result antithetical to the animating purpose of patent law—companies actually feared reading new patents as doing so would trigger the opinion-of-counsel requirement, encourage willful infringement allegations, and force a waiver of privilege.

The Federal Circuit corrected these problems in *Seagate* by adopting a standard for enhanced damages that is both faithful to the text of section 284 and accords with this Court's precedent. Consistent with the text of the statute, *Seagate* recognizes that the only conduct relevant to deciding whether to enhance damages is conduct directly related to the defendant's alleged infringement. Consistent with this Court's punitive damages precedents, *Seagate* requires a showing of willfulness before punishing an infringer with enhanced damages. The result is a standard that assesses whether the accused infringer acted despite an objectively high risk of infringement, without also forcing the accused infringer to submit an opinion of counsel in every patent case to prove the overlap between the advice of counsel and the defenses at trial.

Petitioners call for a return to the pre-*Seagate* status quo. They argue the enhanced damages inquiry should focus on how thoroughly the accused infringer investigated the possibility of infringement and that an accused infringer should not be able to raise defenses at trial unless it can prove it relied on those same defenses to justify its primary conduct. That sort of standard would re-impose the opinion-of-counsel requirement: companies cannot prove they held certain legal views in the past without introducing those legal views into evidence. This

Court need not imagine the parade of horribles that would result from petitioners' suggested standard; that parade already marched for a quarter-century before the Federal Circuit's course-correction in *Seagate*.

Nor is petitioners' argument helped by this Court's recent decisions in *Octane Fitness* and *Highmark*. Those cases dealt with the very different text of section 285 and the very different context of attorneys' fees. In *Seagate*, the Federal Circuit appropriately interpreted section 284 in light of the statutory text, the Due Process limits on punitive damages, and the broader goals of the patent system. Section 285 has no bearing here.

In all events, whatever else this Court does, it should retain an objective component as part of the section 284 inquiry. An objective standard will enable the Federal Circuit to meaningfully oversee the development of the enhanced damages test, promoting uniformity, certainty. and all-too-important balance in the patent system.

ARGUMENT

I. *Seagate* Provides The Correct Standard For Awarding Enhanced Damages Under Section 284.

In *Seagate*, the Federal Circuit held that a patentee may obtain increased damages for patent infringement under 35 U.S.C. §284 if it proves "that the infringer acted despite an objectively high likelihood that its actions constituted infringement of a valid patent" and that "this objectively-defined risk ... was either known or so obvious that it should have been known to the accused infringer." 497 F.3d

at 1371. In light of the plain text of section 284 and this Court's unbroken line of precedent addressing the availability of punitive damages, the three key underpinnings of *Seagate* should be beyond dispute. First, the only conduct relevant to deciding whether increased damages are warranted under section 284 is primary conduct—*i.e.*, the defendant's infringement-related conduct. Second, only infringement-related conduct that is of a sufficient level of culpability—*i.e.*, willfulness—warrants the imposition of punitive damages. Third, willfulness must be measured objectively, with a focus on the risk of harm created by the defendant's actions. These complementary propositions definitively establish that the *Seagate* standard is the correct one.

1. The text and structure of section 284 make clear that the only conduct relevant to deciding whether increased damages are warranted is infringement-related conduct. Section 284, which defines the universe of damages available for patent infringement, provides in relevant part:

> Upon finding for the claimant the court shall award the claimant damages adequate to compensate *for the infringement*, but in no event less than a reasonable royalty for the use made of the invention by the infringer, together with interest and costs as fixed by the court.
>
> When the damages are not found by a jury, the court shall assess them. In either event the court may increase the damages up to three times the amount found or assessed. Increased damages under this paragraph

> shall not apply to provisional rights under section 154(d).

35 U.S.C. §284 (emphasis added).

The text of section 284 tethers enhanced damages to the act of infringement itself. The statute's first paragraph explains that a prevailing claimant is entitled to "damages adequate to compensate *for the infringement*." Its second paragraph then sets forth two rules regarding those damages "for the infringement." First, they may be found by the jury or assessed by the court. Second, "the court may increase the damages up to three times the amount found or assessed." The damages that may be increased are, of course, the damages from the first paragraph—*i.e.*, damages "for the infringement." Thus, whether increased or not, the only damages authorized under section 284 are damages awarded *for the infringement* to compensate for or punish infringing conduct.

Consequently, section 284 does not allow a court to award compensatory damages for infringement and then to award enhanced damages for something else, like unrelated discovery or other non-infringement-related bad conduct that may justify an award of attorneys' fees. If Congress had intended that result, it would have written a statute that provided for compensatory damages for infringement and then separately granted the court discretion to award punitive damages for other wrongdoing. The statute Congress actually wrote, section 284, expressly links the compensatory damages to the additional damages by only permitting the court to "increase" the amount awarded for the infringement, not to create a new

category of damages for conduct unrelated to the infringement.

This reading of the statute is confirmed by both common sense and the statutory structure. A defendant should not face treble, as opposed to single, damages for engaging in conduct that would not even entitle the plaintiff to single damages. Nor is a defendant's act of infringement any more culpable simply because some years later a document is withheld during discovery. As the Federal Circuit has rightly recognized, treble damages are inappropriate to punish "misconduct in the prosecution of or litigation over a patent" because those acts "are not related to the underlying act of infringement and say nothing about the culpability of the infringer." *Jurgens v. CBK, Ltd.*, 80 F.3d 1566, 1570 (Fed. Cir. 1996); *see also Read Corp. v. Portec, Inc.*, 970 F.2d 816, 831 (Fed. Cir. 1992) ("[I]f infringement is innocent, increased damages are not awardable for the infringement." (alterations omitted)).

Any non-infringement-related conduct deserving of sanction is covered by section 285's attorneys' fees provision, which applies to the exceptional conduct of both patentees and alleged infringers. As this Court explained in *Octane Fitness, LLC v. ICON Health & Fitness, Inc.*, 134 S. Ct. 1749 (2014), section 285 grants the district court broad discretion to award attorneys' fees to punish litigants for "the unreasonable manner in which the case was litigated." *Id.* at 1756. When a litigant withholds discovery material, refuses to engage in settlement discussions, harasses the opposing party, or engages in excessive motions practice, that litigant may be held liable for attorneys'

fees, but it should not also be punished with enhanced damages. Indeed, permitting courts to punish unreasonable litigation conduct under both section 284 and section 285 would create a fundamental imbalance in patent litigation: whereas plaintiffs could receive both increased damages *and* attorneys' fees for their opponents' bad-faith litigation tactics, defendants would be limited to attorneys' fees, as defendants never have any damages to increase. This confirms that enhanced damages should be specific to willful infringement.

Reading the statute to authorize increased damages only for infringement-related conduct also avoids the constitutional concerns that would be raised by a punitive damages statute with no limitations whatsoever. If damages could be increased not only for infringement-related conduct, but also for negotiation tactics, or discovery behavior, or settlement strategies, or courtroom demeanor, or anything else of the district court's choosing, section 284 would run headlong into this Court's precedent requiring that parties have fair notice of the types of conduct that can subject them to punishment. *See BMW of N. Am., Inc. v. Gore*, 517 U.S. 559, 574 (1996). The better reading is that section 284 requires that punitive damages be based on the underlying tortious conduct.

2. Because increased damages are appropriate only for infringement-related misconduct, the question then becomes what degree of infringement-related wrongdoing warrants increased damages. The answer to that question comes from this Court's cases on punitive damages. Both this Court and the courts

of appeals have long recognized that enhanced damages under section 284 are punitive. *See, e.g.*, *Seymour v. McCormick*, 57 U.S. 480, 489 (1853) ("The power to inflict vindictive or punitive damages is committed to the discretion and judgment of the court within the limit of trebling the actual damages found by the jury."); *Aro Mfg. Co. v. Convertible Top Replacement Co.*, 377 U.S. 476, 508 (1964) (discussing "punitive or 'increased' damages under the statute's trebling provision"); *Sensonics, Inc. v. Aerosonic Corp.*, 81 F.3d 1566, 1574 (Fed. Cir. 1996) ("[E]nhanced damages are punitive, not compensatory.").

Punitive damages are appropriate only to punish the most reprehensible conduct. They may not be awarded for mere negligence or a lack of due care, but rather require a showing of heightened culpability. Indeed, imposing punitive damages absent an unusually high level of reprehensibility violates Due Process. *See Gore*, 517 U.S. at 575 ("Perhaps the most important indicium of the reasonableness of a punitive damages award is the degree of reprehensibility of the defendant's conduct."). Accordingly, "[t]he prevailing rule in American courts ... limits punitive damages to cases" where the defendant's conduct is "outrageous," "willful, wanton, and reckless," or "even more deplorable." *Exxon Shipping Co. v. Baker*, 554 U.S. 471, 493 (2008) (quotation marks omitted). Likewise, the Restatement describes punitive damages as appropriate to punish a defendant's "outrageous" behavior or his "reckless indifference to the rights of others." Restatement (Second) of Torts §908 (1979). Countless other sources confirm the principle. *E.g.*, W Page Keeton et al., *Prosser and Keeton on the Law of Torts* §2 at 9-10 (5th ed. 1984) ("There is general

agreement that ... mere negligence is not enough, even though it is so extreme in degree as to be characterized as 'gross.'"). Because increased damages under section 284 are punitive, they require, at a minimum, reckless or willful behavior. That section 284 does not actually use the word "willful" or "reckless" is irrelevant; that degree of fault is necessitated by the nature of punitive damages.

3. Although the terms "reckless" and "willful" are not "self-defining," the common law has generally understood them to describe "conduct violating an *objective* standard." *Safeco Ins. Co. of Am. v. Burr*, 551 U.S. 47, 68 (2007) (emphasis added). An actor is reckless when it acts despite an objectively "'high risk of harm that is either known or so obvious that it should be known.'" *Id.* (quoting *Farmer v. Brennan*, 511 U.S. 825, 836 (1994)). If a defendant's act does not entail an objectively high risk of harm, his act is not reckless, regardless of his intent at the time. *See Farmer*, 511 U.S. at 836 (recklessness requires "an unjustifiably high risk of harm"). Applying that rule in *Safeco*, this Court held that a company's failure to provide notice required by the Fair Credit Reporting Act was reckless if the company did not provide notice despite an objectively high likelihood that it was required to do so. 551 U.S. at 69-70. "It is this high risk of harm, *objectively assessed*, that is the essence of recklessness at common law." *Id.* at 69 (emphasis added).

Although the defendant's state of mind is relevant in that he must "know[] or hav[e] reason to know" that his act entails a high risk of harm, Restatement (Second) of Torts §500, his subjective beliefs are

irrelevant to the threshold objective question of whether the act actually entails that high risk of harm. Accordingly, the *Safeco* Court explained that a FCRA defendant's actual belief about whether it was required to provide notice was irrelevant. *Id.* at 70 n.20 ("To the extent [plaintiffs] argue that evidence of subjective bad faith can support a willfulness finding even when the company's reading of the statute is objectively reasonable, their argument is unsound."). Consistent with this Court's description of recklessness in *Safeco*, the Federal Circuit in *Seagate* held that increased damages are appropriate when an infringer acts despite a known and objectively high likelihood that its actions infringed a valid patent, regardless of its subjective belief at the time of infringement.

4. These three propositions working together establish that the *Seagate* standard is the correct one. By requiring an objectively high likelihood that a defendant's actions infringed a valid patent, the *Seagate* standard appropriately tethers enhanced damages to the act of infringement and incorporates the correct standard for recklessness. And by requiring a showing that the infringer knew or should have known of the risk of infringement, the *Seagate* standard accords with this Court's punitive damages precedents and ensures that inadvertent infringers do not get punished as if they were knowing infringers.

Contrary to Halo's assertion, *Seagate* has not "created a situation in which patent holders will almost never receive enhanced damages." Halo Br.28. Nor is Stryker correct that a party can avoid enhanced damages by introducing a defense that is "minimally

plausible" or merely "not frivolous." Stryker Br.48, 50. Rather, a defendant can avoid increased damages only by offering an "objectively reasonable" defense that "raise[s] a *substantial question* as to the validity or noninfringement of the patent." *Bard Peripheral Vascular, Inc. v. W.L. Gore & Associates, Inc.*, 776 F.3d 837, 844 (Fed. Cir.) (emphasis added) (quotation marks omitted), *cert. denied*, 136 S. Ct. 189 (2015). Under this robust standard, infringers can be punished with increased damages for a wide variety of infringement-related wrongdoing. To name a few examples, infringers can be punished for deliberate copying without a reasonable defense, concealment of infringing activity, infringement where the infringer has only frivolous defenses, infringement designed to injure a competitor, or continuing infringement after judgment. And they are. One study, for example, found that willful infringement was found in 37.2% of post-*Seagate* patent infringement cases tried to judgment, which was not a statistically significant difference from the pre-*Seagate* state of affairs. Christopher B. Seaman, *Willful Patent Infringement & Enhanced Damages After* In Re Seagate, 97 Iowa L. Rev. 417, 441 (2012).

The *Seagate* standard's focus on infringement-related conduct also moots the semantic debate about how to describe the section 284 test. Whether called willful infringement or bad-faith infringement or wanton infringement or anything else, *see* Gov't Br.27, section 284 permits an award of increased damages only when the infringer acts despite an objectively high risk of infringement. The only type of bad faith relevant to that inquiry is bad-faith infringement, not bad-faith litigation conduct or bad-faith in unrelated

matters; bad-faith infringement is simply willful infringement by another name.

II. This Court Should Reject Petitioners' Invitation To Return The Law Of Enhanced Patent Damages To The Pre-*Seagate* Status Quo.

Petitioners (and the government) ask this Court to discard *Seagate*'s well-grounded standard in favor of the pre-*Seagate* status quo. But the Federal Circuit had a good reason to abandon the pre-*Seagate* test—namely, it wreaked havoc on the patent system for twenty-five years. This Court should reject petitioners' calls for a return to that ill-working, ill-fated, and illogical test.

A. The pre-*Seagate* Standard.

The Federal Circuit established the pre-*Seagate* standard for enhanced damages in *Underwater Devices Inc. v. Morrison-Knudsen Co.*, 717 F.2d 1380 (Fed. Cir. 1983). In that case, the Federal Circuit held that an accused infringer with notice of another's patent rights has an "affirmative duty to exercise due care to determine whether or not he is infringing." *Id.* at 1389. Although the Federal Circuit often referred to this "due care" standard as a "willfulness" test, the duty of due care was phrased and operated in practice as a negligence standard. *See Seagate*, 497 F.3d at 1371 ("[T]he duty of care announced in *Underwater Devices* sets a lower threshold for willful infringement that is more akin to negligence."). That "due care" test was subjective and backwards-looking; it focused on the accused infringer's belief at the time of the alleged infringement. *See, e.g., Amsted Indus. Inc. v. Buckeye Steel Castings Co.*, 24 F.3d 178, 181 (Fed. Cir. 1994)

("In finding that Buckeye's infringement was willful, the jury was required to find ... that Buckeye acted in disregard of the '269 patent and lacked a reasonable basis for believing it had a right to do what it did."). If accused infringers could prove that they, in fact, investigated the possibility of infringement and came to the reasonable legal conclusion that they were in the clear, the accused infringer could avoid enhanced damages. If it could not prove that it had actually relied on a reasonable belief of non-infringement, enhanced damages would be awarded, regardless of how close the issue actually was at the time of the litigation.

By far the best and, frankly, the only practical way for an accused infringer to prove it held a reasonable, contemporaneous belief of non-infringement or invalidity was by introducing a contemporaneous opinion of counsel to that effect. There is no better evidence that a company held a particular legal opinion than that legal opinion itself. In recognition of that fact, the pre-*Seagate* standard required companies to "seek and obtain competent legal advice from counsel *before* the initiation of any possible infringing activity," *Underwater Devices*, 717 F.2d at 1390, and then to produce that opinion at trial. In fact, for most of the twenty-five years before *Seagate*, an accused infringer's failure to produce an exculpatory opinion at trial "would warrant the conclusion that it either obtained no advice of counsel or did so and was advised that its importation and sale of the accused products would be an infringement of valid U.S. patents." *Kloster Speedsteel AB v. Crucible Inc.*, 793 F.2d 1565, 1580 (Fed. Cir. 1986).

The Federal Circuit in 2004 eliminated the adverse inference, *see Knorr-Bremse Systeme Fuer Nutzfahrzeuge GmbH v. Dana Corp.*, 383 F.3d 1337, 1344 (Fed. Cir. 2004),[2] but failure to introduce an opinion of non-infringement remained all but fatal to a willfulness defense, as no other evidence was nearly as probative of due care. *See id.* at 1352 (Dyk, J., concurring in part and dissenting in part) ("[T]he majority opinion does not address whether a potential infringer can satisfy the requirement of due care without securing and disclosing an opinion of counsel."); *see also Finisar Corp. v. DirecTV Grp., Inc.*, 523 F.3d 1323, 1339 (Fed. Cir. 2008) ("[C]ompetent opinion of counsel ... would provide a sufficient basis for [the accused infringer] to proceed without engaging in objectively reckless behavior."); *Seagate*, 497 F.3d at 1369 (noting that an opinion of counsel is "crucial to the analysis"). Thus, even after *Knorr-Bremse*, enhanced damages turned largely on whether the accused infringer produced an opinion of counsel.

B. The pre-*Seagate* Standard Eroded the Attorney-Client Privilege and Undermined the Goals of the Patent System.

Because companies could stave off enhanced damages only by introducing the legal advice they had received, they also were required to waive attorney-client privilege. After all, under well-established

---

[2] Congress in 2011 codified *Knorr-Bremse*'s holding in the Leahy-Smith America Invents Act, Pub. L. No. 112-29, 125 Stat. 284 (2011), 35 U.S.C. §298.

privilege law, introducing communications from counsel waives privilege for "all other communications relating to the same subject matter." *Fort James Corp. v. Solo Cup Co.*, 412 F.3d 1340, 1349 (Fed. Cir. 2005); *see id.* ("The waiver extends beyond the document initially produced out of concern for fairness, so that a party is prevented from disclosing communications that support its position while simultaneously concealing communications that do not."). In tandem, the opinion-of-counsel requirement and the waiver of attorney-client privilege created a regime recognizable only Through the Looking-Glass: plaintiffs were incentivized to make frivolous claims; attorneys were encouraged to provide misleading advice; trials revolved around the least reliable evidence; and defendants could avoid enhanced damages only by staying uninformed or obtaining opinions of counsel with all of the costs and difficulties that doing so entails.

1. The pre-*Seagate* regime incentivized baseless willfulness allegations by bestowing massive benefits upon patentees for conclusory allegations of willful infringement. The incentives were so strong that, according to one study, willfulness was alleged in *over 92%* of patent infringement cases. *See* Kimberly A. Moore, *Empirical Statistics on Willful Patent Infringement*, 14 Fed. Cir. B. J. 227, 232 (2005). The reasons for this explosion in willfulness allegations are not difficult to discern. Alleging willfulness typically caused the accused infringer to waive attorney-client privilege, granting the patentee access and insight into the accused infringer's substantive defenses. *Id.* at 232-33. This access also allowed patentees to use their opponents' attorney-client

communications as a sword if the accused infringer's trial defense differed in any way from the pre-litigation opinion. And by alleging willfulness, patentees gained access to reams of documents and e-mails having no bearing on the question of infringement, but that could be used to cast the accused infringer or its employees in a negative light. *See* Kimberly A. Moore, *Judges, Juries, and Patent Cases—An Empirical Peek Inside the Black Box*, 99 Mich. L. Rev. 365, 393 (2000) ("Juries may perceive the patentee who brings an infringement action as a victim and an infringer accused of stealing patented technology, a villain ... The outcome data indicate that juries are more easily persuaded than judges by 'bad guy' evidence."). Alleging willfulness secured all these benefits with no real downside, tilting the playing field dramatically toward patentees and imposing massive settlement pressures on accused infringers with legitimate defenses to infringement allegations.

In addition, the opinion-of-counsel requirement imposed serious financial costs on companies in the technology sector. Obtaining an opinion letter from counsel in 2004 cost between $10,000 and $100,000 per opinion, depending on the complexity of the issues. Nat'l Research Council, *A Patent System for the 21st Century* 118-19 (Stephen A. Merrill, et al. eds., 2004). Those costs add up fast: *Amici* regularly receive notice of new patents, and the number of patents continues to grow rapidly. Obtaining opinion letters for each one of these patents would be cost-prohibitive, forcing *amici* into a high-stakes game of guessing which patentees might one day sue them for willful infringement. Making matters worse, software companies (including some *amici*) launch new

products or substantially update their products multiple times each year, further increasing the cost of satisfying the opinion-of-counsel requirement.

Perversely, the opinion-of-counsel requirement transformed opinion letters from client-directed advice into litigation-directed showpieces, thereby eroding the reliability and accuracy of attorney-client communications. The attorney-client privilege, through its promise of confidentiality, "encourage[s] full and frank communication between attorneys and their clients and thereby promote[s] broader public interests in the observance of law and administration of justice." *Upjohn Co. v. United States*, 449 U.S. 383, 389 (1981). The privilege is one of the pillars of our legal system, ensuring that clients may speak freely to their attorneys and that attorneys may provide uncensored legal advice to their clients. But in the pre-*Seagate* world, both attorney and client knew that any communications would be made public, eliminating the very confidentiality that ensured "full and frank" discussion.

Companies, knowing that their future litigation opponents would have access to all of their communications, were reticent with counsel. And counsel, well aware that the client needed a favorable opinion for any litigation that followed, would not "send written advice to a client with the bad news that they likely infringe a valid patent except under extraordinary circumstances." Mark A. Lemley & Ragesh K. Tangri, *Ending Patent Law's Willfulness Game*, 18 Berkeley Tech. L.J. 1085, 1103 (2003). Instead, counsel would either "remain silent on issues where the news is not good" or would "write one thing

down and tell the client something different orally." *Id.* at 1103-04; *see also* Matthew D. Powers & Steven C. Carlson, *The Evolution and Impact of the Doctrine of Willful Patent Infringement*, 51 Syracuse L. Rev. 53, 105 (2001) ("Because of the risk of having otherwise-damaging documents produced at trial, sophisticated parties undoubtedly restrict the scope of their relationship with their lawyers, and expect their lawyers to prepare only exculpatory opinions that suggest no wrongful conduct on the part of the accused."). In this way, the pre-*Seagate* regime and its assumption that advice-of-counsel opinions would be submitted and attorney-client privileges would be waived naturally eroded the very honesty that attorney-client privilege is designed to safeguard.

Advice-of-counsel letters thus became "advocacy showpieces" instead of unvarnished legal advice, defeating the very purpose of those letters. Lemley & Tangri at 1104. If companies actually believed the overly optimistic opinions of non-infringement they received, they would continue potentially infringing activities unchecked and would be unduly inclined to litigate. *Id.* If they recognized the opinions as something less than truly candid advice, then they were left to make their own assessment of infringement without the aid of unvarnished counsel, which is not conducive to good business decisionmaking. *Id.* In either event, the patent system as a whole suffered.

Despite the increasing unreliability of advice-of-counsel letters, there was no corresponding decrease in their centrality in determining whether to award increased damages. Just as before, willfulness claims

rose and fell on whether accused infringers had received contemporaneous opinions of non-infringement—even though everyone understood that those opinions had become primarily litigation tools, not candid legal analysis.

2. The pre-*Seagate* standard not only interfered with the attorney-client relationship and patent litigation, it stifled innovation. The law created incentives for company employees to avoid learning about new patents. If they never learned about new patents, companies would have no duty to obtain an opinion of counsel about those patents and they could not be forced to waive attorney-client privilege to prove their lack of willfulness. Unsurprisingly, then, companies in the pre-*Seagate* era responded to these incentives and were reluctant to read patents. *See Knorr-Bremse*, 383 F.3d at 1351 (Dyk, J., concurring in part and dissenting in part) ("[T]he due care requirement has fostered a reluctance to review patents for fear that the mere knowledge of a patent will lead to a finding of lack of due care."); FTC, *To Promote Innovation: The Proper Balance of Competition and Patent Law and Policy*, ch. 5, at 29 (2003) ("[E]xposure to willfulness charges in fact discourages firms from determining what patents they might be infringing."); Nat'l Research Council, *A Patent System for the 21st Century* 119 (Stephen A. Merrill, et al. eds., 2004) ("[E]xposure to claims of willful infringement has led to a practice of deliberately avoiding learning about issued patents, a development sharply at odds with the disclosure function of patent law.").

This reluctance to review patents undermines the

primary purpose of the patent system. The patent system was designed to encourage innovation. It does so not only by granting inventors a temporary monopoly to exploit their inventions, but also by ensuring that new technologies are disclosed to the public. Disclosure of a new invention "will stimulate ideas and the eventual development of further significant advances in the art." *Kewanee Oil Co. v. Bicron Corp.*, 416 U.S. 470, 481 (1974). Indeed, once a patent is disclosed, the law encourages inventors to "design around" patents, thereby creating new innovations and further advancing the technology. *See Read Corp. v. Portec, Inc.*, 970 F.2d 816, 828 (Fed. Cir. 1992) ("We have often noted that one of the benefits of the patent system is the incentive it provides for 'designing around' patented inventions, thus creating new innovations."). It is therefore important to "the Progress of Science and useful Arts," U.S. Const. art. I, §8, cl.8, that the inventing public reads patents.

The converse proposition is also true: innovation can be stifled when the public fears reading patents. When that happens, companies could remain unaware of new technologies that could prompt independent innovation or potential licensing opportunities; companies cannot purposefully design around patents, and perhaps find a better means to a similar end, because they are too fearful to learn about those patents in the first place; and companies are actually more likely to accidentally infringe patents because they will not know what has already been patented. The pre-*Seagate* standard thus created a regime with less innovation and more infringement, which worked to nobody's benefit—except, perhaps, those who make

their living by suing for patent infringement.

C. Petitioners' Proposed Standards Would Recreate the Very Problems *Seagate* Solved.

1. In *Seagate*, the Federal Circuit was able to craft a standard that was both consistent with general legal principles and solved the many problems plaguing patent law. *Seagate* solves the opinion-of-counsel quandary by shifting focus away from the legal opinion a defendant in fact held at the time of the alleged infringement, obviating the need to produce an opinion letter. Under *Seagate*, an accused infringer can defeat a willfulness allegation by proving it has an objectively reasonable defense to infringement, without also being required to prove that it was relying on that same defense at the time of the alleged infringement. *See Carnegie Mellon Univ. v. Marvell Tech. Grp., Ltd.*, 807 F.3d 1283, 1301 (Fed. Cir. 2015) ("[W]e have repeatedly assessed objective reasonableness of a defense without requiring that the infringer had the defense in mind before the litigation."); *see also Safeco*, 551 U.S. at 70 & n.20. Prudent companies will still obtain candid opinions of counsel to help guide their conduct, but those opinions no longer must be produced for litigation, and will be fashioned on the assumption that the attorney-client privilege will shield them from disclosure. Instead of producing artificial advice-of-counsel opinions, defendants can rely on the objective strength of their non-infringement or invalidity defenses to defeat willfulness allegations. *See* Seaman, *supra*, at 454 (finding that after *Seagate*, willfulness was found at the same rate regardless of whether or not a defendant

introduced an opinion of counsel).

Seagate also returns balance to the patent system by evening the playing field between patentees and accused infringers. Companies continue to be deterred from willful infringement by the threat of treble damages, but they are less afraid to read patents, less afraid to design around patents, and less afraid to disregard patents whose validity is subject to objective question. When litigation becomes necessary, accused infringers are no longer disadvantaged by mandatory waiver of attorney-client privilege or extreme settlement pressures.

2. In spite of all this, petitioners call for a return to the bad old days, arguing that the willfulness inquiry should once again focus on the accused infringer's subjective beliefs at the time of the alleged infringement. In particular, petitioners take issue with *Seagate*'s objective prong, complaining that it disregards "the facts that faced a defendant when it infringed," Halo Br.24, and that it permits defendants "to devise an after-the-fact defense" that it never actually relied on, Stryker Br.50. As an initial matter, the *Seagate* standard *does* look to the objective facts as they existed at the outset of infringement. For example, the state of other litigation concerning the patent, the state of U.S. Patent and Trademark Office actions, and other objective facts will all be considered as of the time of the defendant's allegedly infringing acts.

Petitioners are correct, however, that *Seagate* does not solely require an inquiry into the alleged infringer's subjective state of mind at the time of infringement. But this was not some kind of oversight

by the Federal Circuit, nor is it a flaw with the *Seagate* standard. Rather, *Seagate*'s focus on objective reasonableness in addition to subjective beliefs comes directly from this Court's *Safeco* opinion, and it directly addresses the opinion-of-counsel problem that bedeviled the pre-*Seagate* era. Undeterred, petitioners offer up legal standards that would return patent law to the pre-*Seagate* status quo. Halo, for example, argues that the section 284 inquiry should turn on "whether (and how much) the defendant investigated a charge of infringement," Halo Br.11, and that district courts should gauge whether "the defendant's investigation [was] non-existent, cursory, average, or thorough," *id.* at 27. Stryker offers the same, arguing that enhanced damages should depend on "whether the defendant reasonably investigated and evaluated the possibility of infringement." Stryker Br.40. Likewise, the government posits a "time of infringement" rule, arguing that the section 284 "analysis should turn on the facts and circumstances known to the defendant *at the time of the infringing conduct*." Gov't Br.28-29. All three stress that defendants should be required to show that their defenses at trial match the reasoning that prevailed within their companies at the outset of the infringement.

All of these standards would re-institute the *de facto* opinion-of-counsel requirement. When petitioners speak of an "investigation," they are referring to a legal investigation conducted by opinion counsel. The only way for accused infringers to prove that they "evaluated the possibility of infringement" in a "thorough" manner is to produce the evaluative document itself—*i.e.*, to produce the opinion of non-

infringement or invalidity. Stryker admits as much, conceding that under its proposed standard, an accused infringer could avoid treble damages by "introduc[ing] evidence that it sought and received good-faith legal advice." Stryker Br.41. That, of course, would force the defendant to waive attorney-client privilege, which would bestow innumerable litigation benefits upon the plaintiff, and so on.[3]

3. Returning to the pre-*Seagate* status quo is misguided for all of the reasons already expressed, but even more so given the recent proliferation of patent assertion entities. *See eBay Inc. v. MercExchange, L.L.C.*, 547 U.S. 388, 396 (2006) (Kennedy, J., concurring) ("An industry has developed in which firms use patents not as a basis for producing and selling goods but, instead, primarily for obtaining licensing fees."). Although there may be room for disagreement about what constitutes a PAE, there is no serious dispute that suits filed by PAEs now dominate the patent docket of the federal courts. Suits by PAEs now account for "a majority of all patent assertions in the country and an even higher percentage in the information technology (IT) industry." Mark A. Lemley & A. Douglas Melamed, *Missing the Forest for the Trolls*, 113 Colum. L. Rev.

---

[3] Lest there be any doubt, Congress' enactment of 35 U.S.C. §298 does not eliminate the problem. Section 298 does prohibit using a defendant's failure to obtain an opinion of counsel against it. But it does not change the fundamental truth that under the pre-*Seagate* duty of care standard, the only way for an alleged infringer to be sure that it could successfully fend off enhanced damages would be producing an opinion of counsel (and waiving privilege).

2117, 2119 (2013); *see id.* at 2123 ("[T]he number of troll suits has grown rapidly in recent years.").

As this Court has recognized, the business strategy of many PAEs is to make demands upon as many entities as possible, "very broadly and without prior investigation." *Commil USA, LLC v. Cisco Sys., Inc.*, 135 S. Ct. 1920, 1930 (2015) (quotation marks omitted). These PAEs "depend on sheer numbers rather than the quality and value of any given patent," and their strategy is successful because they have "so many patents that read on a particular target that a challenge to the validity of the patents makes little sense." Lemley & Melamed, *supra*, at 2127. As bad as the opinion-of-counsel problem was before *Seagate*, it will be several orders of magnitude worse if companies must obtain opinions of counsel every time a PAE sends a notice of infringement or a demand letter. Requiring companies to comply with an opinion-of-counsel requirement with both PAEs and patents at an all-time high would be courting disaster, especially in light of the negligible costs to PAEs of sending infringement letters and the substantial costs of obtaining opinions of counsel as an accused infringer. Indeed, to the extent that Members of this Court have concerns about the current state of patent litigation—including its tendency to reward questionable patents and concentrate litigation in certain forums—there is no surer way to make the system worse, than to return to the pre-*Seagate* regime.

III. *Octane* and *Highmark* Have no Bearing on *Seagate*.

This Court's opinions in *Octane Fitness, LLC v. ICON Health & Fitness, Inc.*, 134 S. Ct. 1749 (2014),

and *Highmark Inc. v. Allcare Health Management System, Inc.*, 134 S. Ct. 1744, 1746 (2014), do not call *Seagate* into question. In *Octane* and *Highmark*, this Court interpreted section 285, which governs the award of attorneys' fees in patent cases. Section 285, in its entirety, provides: "The court in exceptional cases may award reasonable attorney fees to the prevailing party." 35 U.S.C. §285. Upon that scant statutory text, the Federal Circuit had imposed an "overly rigid" standard that permitted attorneys' fees only for "litigation-related misconduct of an independently sanctionable magnitude" or if "the litigation was both 'brought in subjective bad faith' and 'objectively baseless.'" *Octane*, 134 S. Ct. at 1756. This Court rejected the Federal Circuit's formulation, adopting instead a flexible inquiry that permits district courts to engage in a "case-by-case exercise of their discretion, considering the totality of the circumstances." *Id.* Notably, that standard allows for attorneys' fees to be awarded to either patentees or accused infringers.

Petitioners argue that the Federal Circuit repeated the same mistake as in *Octane* by giving substance to the discretionary power provided by section 284. *See* Halo Br. 18-19; Stryker Br. 15-17. That simplistic argument ignores the many textual differences between sections 284 and 285, and the many differences in context between an enhanced damages award and an attorneys' fees provision. Indeed, the very premise of petitioners' argument—that a statute granting discretion to district courts must always be interpreted as granting *unbounded* discretion—is contradicted by several of this Court's cases. *See, e.g.*, *Martin v. Franklin Capital Corp.*, 546

U.S. 132, 139 (2005) ("Discretion is not whim, and limiting discretion according to legal standards helps promote the basic principle of justice that like cases should be decided alike."); *Indep. Fed'n of Flight Attendants v. Zipes*, 491 U.S. 754, 758 (1989) ("[I]n a system of laws discretion is rarely without limits."). *Octane* and *Highmark* do not stand for the broad principle that courts may not provide substance to a discretionary standard; rather, they hold only that nothing about section 285 justified the particular standard the Federal Circuit had adopted. Here, on the other hand, section 284 provides both textual and contextual support for the *Seagate* test.

Whereas section 285 contains a grand total of fourteen words and provides no textual guidance for the award of attorneys' fees, section 284's text tethers increased damages to the act of infringement itself. *See supra* Part I. And while section 285 appropriately captures the full range of litigation conduct that either party can engage in, section 284 focuses exclusively on the defendant and its infringement-related conduct. Thus, in adopting the *Seagate* standard, the Federal Circuit was not repeating a mistake, but rather keeping faithful to the text of the statute it was interpreting.

Moreover, while fee-shifting determinations are inherently discretionary and within the district court's broad equitable powers—making an unbounded totality-of-the-circumstances test suitable in that context—courts do not have the discretion to treble damages as they see fit in the absence of a statutory provision endowing them with that extraordinary power. Indeed, Due Process requires that punitive

damages regimes provide defendants fair notice of the conduct that will subject them to punitive damages, *see Gore*, 517 U.S. at 574, and meaningful appellate review, *see Honda Motor Co. v. Oberg*, 512 U.S. 415, 432 (1994), making petitioners' request for an amorphous totality-of-the-circumstances test wholly inappropriate. In addition, as already noted, the case law unequivocally mandates that punitive damages be available only for particularly egregious conduct, necessitating the willfulness standard the Federal Circuit adopted.

Equally important, the function and practical consequences of attorneys' fees and trebling damages are not the same. Attorneys' fees and willful infringement sanctions often serve very different ends and have highly disparate effects. While §285's primary aim is to "compensat[e] ... the prevailing party for its monetary outlays in the prosecution or defense of the suit." *Raylon, LLC v. Complus Data Innovations, Inc.*, 700 F.3d 1361, 1373 (Fed. Cir. 2012) (Reyna, J., concurring), the treble damages that follow a willful infringement finding are meant to serve a punitive function and raise distinct concerns about overdeterring legitimate conduct.

IV. At A Minimum, Any Test For Enhanced Damages Must Contain An Objective Component.

1. Even if this Court ultimately determines that *Seagate* is not the proper standard for increased damages under section 284, the Court should ensure that any standard it adopts retains an objective component. For starters, any standard focusing exclusively on the accused infringer's subjective

beliefs will restore the opinion-of-counsel requirement that plagued patent law for so many years. An objective component, on the other hand, by permitting accused infringers to defeat willfulness allegations by relying on the objective strength of their infringement defenses, allows accused infringers to avoid treble damages without being forced to waive attorney-client privilege.

On top of that, retaining an objective component would permit the Federal Circuit to meaningfully oversee the further development of enhanced damages law, promoting uniformity in the patent system. *See Teva Pharm. USA, Inc. v. Sandoz, Inc.*, 135 S. Ct. 831, 851 (2015) ("Uniformity is a critical feature of our patent system."). A wholly subjective test, on the other hand, would likely come with abuse-of-discretion review, *see Highmark*, 134 S. Ct. at 1748, limiting the Federal Circuit's ability to ensure that enhanced damages are awarded uniformly across the country. Due process demands not just appellate review of punitive damages awards, *see Oberg*, 512 U.S. at 432, but meaningful legal standards for reviewing courts to apply, *id.* at 435-36 (Scalia, J., concurring). Allowing awards of enhanced damages without meaningful Federal Circuit oversight would be to invite differing standards in different parts of the country, making it impossible for companies to have settled expectations for litigation.

Indeed, PAEs already have proven willing and able to exploit cities and courthouses because of their perceived amenability to patent infringement claims. For example, in the first half of 2015, a staggering 44.4% of all patent cases were filed in the Eastern

District of Texas, and most of those by PAEs. *See* Daniel Nazer, *Deep Dive: Why We Need Venue Reform to Restore Fairness to Patent Litigation*, Electronic Frontier Foundation (Aug. 17, 2015), https://perma.cc/VNY3-9HX7; *id.* ("[T]he Eastern District's speed, large damage awards, outstanding win-rates, likelihood of getting to trial, and plaintiff-friendly local rules suddenly made it the venue of choice for patent plaintiffs." (alteration and quotation marks omitted)). If the Federal Circuit is unable to ensure that enhanced damages are awarded for the same conduct no matter the venue, PAEs will undoubtedly begin flooding favorable venues with willfulness suits, to the detriment of certainty and uniformity in the law.

Meaningful oversight is all the more important given the stakes involved. Treble damages figures in patent cases can reach into the hundreds of millions and beyond. *See, e.g.*, Stryker Pet.App.119a (district court awarded $152 million in punitive damages). As this Court has noted, when a district court's disposition of an issue has substantial monetary consequences, that issue should be "reviewed more intensively." *Pierce v. Underwood*, 487 U.S. 552, 563 (1988); *see also Oberg*, 512 U.S. at 432 ("Punitive damages pose an acute danger of arbitrary deprivation of property."). Protection against arbitrary deprivation of property can only be assured if the standard is objective and the review is *de novo*.

Finally, an objective prong would help eliminate frivolous willfulness allegations at the summary judgment stage. Weeding out these allegations before trial will not only save resources, it will also prevent

patentees from introducing "bad guy" evidence, *see* Moore, *supra*, 99 Mich. L. Rev. at 393, that is purportedly germane to the issue of willfulness but in reality is intended solely to present the accused infringer as a villain to the jury. As discussed *supra*, juries can be persuaded by such character evidence to find infringement, even where the actual evidence of infringement is flimsy. *Id.*

To the extent this Court believes that either of the cases before it was wrongly decided, the objective standard itself is not to blame. Any shortcoming in the *application* of the objective test in either case is not a reason to discard the test itself. Indeed, concerns with the application of the test favor a more objective and reviewable inquiry, as opposed to an amorphous totality-of-the-circumstance test that essentially guarantees that unjust results will be shielded from correction on appeal.

CONCLUSION

For the reasons set forth above, this Court should adopt the *Seagate* standard and affirm the judgments below. At a minimum, however, this Court should adopt a standard that incorporates an objective component.

Respectfully submitted,

PAUL D. CLEMENT
Counsel of Record
D. ZACHARY HUDSON
MICHAEL D. LIEBERMAN
BANCROFT PLLC
500 New Jersey Ave, NW
Seventh Floor
Washington, DC 20001
(202) 234-0090
pclement@bancroftpllc.com

Counsel for Amici Curiae

January 20, 2016

Nos. 14-1513 & 14-1520

IN THE

Supreme Court of the United States

HALO ELECTRONICS, INC.,
Petitioner,

v.

PULSE ELECTRONICS, INC., ET AL.,
Respondents.

STRYKER CORPORATION, ET AL.,
Petitioners,

v.

ZIMMER, INC., ET AL.,
Respondents.

On Writs of Certiorari to the United States Court of Appeals for the Federal Circuit

BRIEF OF *AMICUS CURIAE* HUAWEI TECHNOLOGIES CO., LTD. SUPPORTING RESPONDENTS

AARON M. STREETT
Counsel of Record
J. MARK LITTLE
BAKER BOTTS L.L.P.
910 Louisiana St.
Houston, Texas 77002
(713) 229-1855
aaron.streett@bakerbotts.com

Counsel for Amicus Curiae Huawei Technologies Co., Ltd.

WILSON-EPES PRINTING CO., INC. – (202) 789-0096 – WASHINGTON, D.C. 20002

QUESTION PRESENTED

Whether damages in a patent infringement case may be trebled under 35 U.S.C. § 284, even though the defendant presents objectively reasonable defenses that the patent-in-suit is invalid or not infringed.

TABLE OF CONTENTS

	Page
Question Presented	i
Interest of *Amicus Curiae*	1
Summary of Argument	5
Argument	6
I. Because Enhanced Damages Under Section 284 Are A Species Of Punitive Damages, The Governing Test Must Ensure They Remain A Rare Exception For The Most Egregious Cases	6
A. This Court has long held that enhanced damages under Section 284 are a type of punitive damages	6
B. As with all punitive damages, the law must ensure that enhanced damages under Section 284 are awarded rarely and only in extreme cases	7
1. Punitive damages and enhanced damages under Section 284 are reserved for the worst conduct	7
2. Enhanced damages are commonly awarded even under the *Seagate* test, cautioning against further weakening that standard	8
II. The Test For Enhanced Damages Under Section 284 Should Include Considerations Akin To Those Employed In The Punitive-Damages Context	10

TABLE OF CONTENTS—Continued

Page

A. The Federal Circuit's *Seagate* test appropriately draws from this Court's punitive-damages jurisprudence 11

1. The *Seagate* test provides clear guidance to fact finders and predictability to litigants 11

2. Petitioners' alternative test will foster unpredictability for both courts and innovators 13

B. This Court should emphasize the importance of certain punitive-damages factors that protect innovation from both vexatious NPE litigation and egregious trampling of intellectual-property rights 14

1. Enforcing the "motivation for harm" factor punishes bad-faith infringement by competitors while generally prohibiting enhanced damages for NPEs 15

2. An emphasis on punishing bad-faith copying and refusal to negotiate deters the worst kinds of infringement without unnecessarily arming NPEs with the threat of enhanced damages 16

3. These punitive-damages considerations protect against unfair competition while limiting the *in terrorem* effect of NPE lawsuits 18

TABLE OF CONTENTS—Continued

Page

C. As with punitive damages, courts should award enhanced damages only when necessary to deter future wrongdoing 20

1. Enhanced damages must deter flagrant disregard of intellectual property rights without discouraging challenges to patents generally 20

2. Deterrence rarely justifies awarding enhanced damages in NPE cases 22

D. Enhanced damages, like punitive damages, must be subject to searching appellate review 23

Conclusion 25

TABLE OF AUTHORITIES

Page

CASES

Aro Mfg. Co. v. *Convertible Top Replacement Co.*, 377 U.S. 476 (1964) 6, 7

Bard Peripheral Vascular, Inc. v. *W.L. Gore & Assocs., Inc.*, 682 F.3d 1003 (Fed. Cir. 2012) 23, 24

BMW of N. Am., Inc. v. *Gore*, 517 U.S. 559 (1996) 13

Chicago Title Ins. Corp. v. *Magnuson*, 487 F.3d 985 (6th Cir. 2007) 15

Commil USA, LLC v. *Cisco Sys., Inc.*, 135 S. Ct. 1920 (2015) 19

Cooper Indus., Inc. v. *Leatherman Tool Grp., Inc.*, 532 U.S. 424 (2001) 7, 20, 24

Exxon Shipping Co. v. *Baker*, 554 U.S. 471 (2008) 7, 11, 12, 14, 20

Florida Prepaid Postsecondary Educ. Expense Bd. v. *Coll. Sav. Bank*, 527 U.S. 627 (1999) 6

In re Seagate Tech., LLC, 497 F.3d 1360 (Fed. Cir. 2007) 3, 8, 9, 10, 11, 12, 13, 15, 24

Mayo Collaborative Servs. v. *Prometheus Labs, Inc.*, 132 S. Ct. 1289 (2012) 21

Philip Morris USA v. *Williams*, 549 U.S. 346 (2007) 12, 13

TABLE OF AUTHORITIES—Continued

Page

Read Corp. v. *Portec, Inc.*,
970 F.2d 816 (Fed. Cir.
1992) 9, 15, 16, 17, 23

Seymour v. *McCormick*,
57 U.S. 480 (1853) 6, 7, 12

Spectralytics, Inc. v. *Cordis Corp.*,
649 F.3d 1336 (Fed. Cir. 2011) 9, 15, 23

State Farm Mut. Auto. Ins. Co. v.
Campbell,
538 U.S. 408 (2003) 7, 13, 15, 16, 21, 24

Tilghman v. *Proctor*,
125 U.S. 136 (1888) 6

Wellogix, Inc. v. *Accenture, L.L.P.*,
716 F.3d 867 (5th Cir. 2013) 16, 23

STATUTE

35 U.S.C. § 284 ..... 5, 6, 7, 8, 10, 11, 14, 20, 24

ARTICLES AND TREATISES

7 Chisum on Patents § 20.03[4][b][iii]
(2009) 21

Leychkis, *Of Fire Ants and Claim
Construction: An Empirical Study of
the Meteoric Rise of the Eastern
District of Texas As A Preeminent
Forum for Patent Litigation*, 9 Yale
J.L. & Tech. 193 (2007) 24

TABLE OF AUTHORITIES—Continued

Page

Love, *An Empirical Study of Patent Litigation Timing: Could A Patent Term Reduction Decimate Trolls Without Harming Innovators?*, 161 U. Pa. L. Rev. 1309 (2013) 17

Mulligan & Lee, *Scaling the Patent System*, 68 N.Y.U. Ann. Surv. Am. L. 289 (2012) 21

Restatement (Second) of Torts § 908 (1979) 11

Seaman, *Willful Patent Infringement and Enhanced Damages After* In re Seagate: *An Empirical Study*, 97 Iowa L. Rev. 417 (2012) 9, 10, 13, 24

INTERNET RESOURCES

PricewaterhouseCoopers LLP, 2015 Patent Litigation Study (May 2015), http://www.pwc.com/us/en/forensic-services/publications/assets/2015-pwc-patent-litigation-study.pdf 22

RPX Corp., 2013 NPE Litigation Report (2014), https://www.rpxcorp.com/wp-content/uploads/2014/01/RPX-2013-NPE-Litigation-Report.pdf 3

RPX Corp., 2014 NPE Cost Report: High-level Findings (2015), https://www.rpxcorp.com/wp-content/uploads/sites/2/2015/05/RPX-2014-NPE-Cost-Report-ZZFinal.pdf 19

Page

RPX Corp., 2015 NPE Activity: Highlights (2016), https://www.rpxcorp.com/wp-content/uploads/sites/2/2016/01/RPX-2015-NPE-Activity-Highlights-FinalZ.pdf 18

U.S. Patent and Trademark Office, Patenting by Organization (Utility Patents) 2014, http://www.uspto.gov/web/offices/ac/ido/oeip/taf/topo_14.htm 2

World Intellectual Property Organization, Who Filed the Most PCT Patent Applications in 2014?, http://www.wipo.int/export/sites/www/ipstats/en/docs/infographics_pct_2014.pdf 2

IN THE

Supreme Court of the United States

NOS. 14-1513 & 14-1520

HALO ELECTRONICS, INC.,
Petitioner,

v.

PULSE ELECTRONICS, INC., ET AL.,
Respondents.

STRYKER CORPORATION, ET AL.,
Petitioners,

v.

ZIMMER, INC., ET AL.,
Respondents.

On Writs of Certiorari to the United States Court of Appeals for the Federal Circuit

BRIEF OF *AMICUS CURIAE* HUAWEI TECHNOLOGIES CO., LTD. SUPPORTING RESPONDENTS

INTEREST OF *AMICUS CURIAE*[1]

[1] All counsel of record, with the exception of counsel for Zimmer, Inc., consented to the filing of this brief by filing blanket consents with the Clerk. Counsel of record for Zimmer has consented to the filing of this brief. *Amicus* states that no portion of this brief was authored by counsel for a party and that no person or entity other than *amicus* or their counsel made a monetary contribution intended to fund the preparation or submission of this brief.

Huawei Technologies Co., Ltd. is the world's second largest manufacturer of cellular network infrastructure equipment and applies for more patents than any other company in the world.[2] Headquartered in Shenzhen, China, with principal U.S. offices in Texas and California, its products serve over one-third of the world's population. Huawei ranks among the top five mobile handset vendors worldwide. Huawei's telecom network equipment, IT products and solutions, and smart devices can be found in 170 countries and regions. In 2014, Huawei achieved $46.7 billion in annual sales revenue, ranking it 228th in the Global Fortune 500.

Innovation is at the core of Huawei's business. Huawei consistently invests over 10% of its annual revenue in research and development. In 2014, for example, Huawei invested $6.6 billion (14.2% of its total 2014 revenue) in developing new products for the marketplace. This research and development spans the globe, with significant research activities occurring in many countries, including a $1.1 billion presence in the United States.

This commitment to innovation has resulted in Huawei holding one of the largest patent portfolios in the world, consisting of over 41,000 patents. This number grows each year as Huawei continues to pursue new inventions, applying for over 4,000 new patents each year. In 2014, for instance, Huawei and its subsidiaries received over 1,000 new patents in the United States alone, ranking it among the top 30 companies in securing U.S. patents.[3]

---

[2] World Intellectual Property Organization, Who Filed the Most PCT Patent Applications in 2014?, http://www.wipo.int/export/sites/www/ipstats/en/docs/infographics_pct_2014.pdf.

[3] U.S. Patent and Trademark Office, Patenting by Organization (Utility Patents) 2014, http://www.uspto.gov/web/offices/ac/ido/oeip/taf/topo_14.htm.

As evidenced by its robust patent program, Huawei believes that protection of intellectual property is of utmost importance both to its business and to the telecommunications industry as a whole. Huawei seeks to maintain a legal environment that protects research investment and rewards innovation, while at the same time allowing for healthy competition. Huawei's licensing policy reflects that approach, as Huawei has executed licensing agreements allowing many of its competitors to use Huawei's U.S.-patented innovations.

Huawei has a strong interest in this case because its drive to innovate and compete in the marketplace inevitably gives rise to patent-infringement disputes with other intellectual-property holders and competitors. Particularly pernicious are the often baseless infringement claims asserted by non-practicing entities (NPEs). NPE litigation represents a serious threat to Huawei's continued innovation. Huawei is a favorite target of NPEs. In 2013, Huawei was one of the top 10 companies most often sued by NPEs.[4] And in the last year alone, Huawei spent tens of millions of dollars defending NPE lawsuits. That amount exceeds both Huawei's profits from the U.S. market and the operating costs of its U.S. subsidiaries.

Huawei is concerned about the disastrous effects on high-tech companies that would result if this Court rejects the *Seagate* test or otherwise loosens the strictures on the award of enhanced damages. The threat of infringement suits already imposes steep costs on innovating companies, and allowing district courts to impose treble damages guided only by their discretion would increase those costs even further. The very real prospect of treble damages in run-of-the-mill infringement suits

---

[4] RPX Corp. 2013 NPE Litigation Report 30 (2014), https://www.rpxcorp.com/wp-content/uploads/2014/01/RPX-2013-NPE-Litigation-Report.pdf.

would force high-tech companies to settle even marginal claims in order to avoid the risk of enormous judgments. And the greatest beneficiaries of this new rule would be NPEs, entities who have no fear of infringement suits because they do not engage in innovation, much less market products.

That is not to say that Huawei opposes enhanced damages in every instance. As one of the largest patent holders in the world, Huawei knows all too well the need to discourage anti-competitive behavior in the intellectual-property context. Without the threat of enhanced damages, some operating companies (whether direct competitors or competitors of the patentee's customers) could brazenly resist reasonable licensing negotiations in favor of simply copying the innovation and daring the patent holder to undergo the costly exercise of bringing suit. That lawsuit would normally result in damages equal to the licensing fees they would have otherwise paid (and perhaps attorney's fees in exceptional cases). Thus, without enhanced damages, direct competitors and competitors of the patentee's customers have little to lose and much to gain by deliberately infringing. Yet the patent holder's business suffers irreparable harm as a result of each instance of this unfair competition, harm that compensatory damages cannot cure. For a large patent holder like Huawei, this process must be repeated virtually *ad infinitum*, with each case piling more expenses and competitive harm on the patent holder. Enhanced damages can deter such unfair competition and send a strong message that indefensible, bad-faith efforts to inflict competitive harm will be punished.

In sum, Huawei seeks to ensure that U.S. patent law continues to safeguard innovation by imposing suitably stringent requirements on the award of enhanced damages, particularly in suits brought by NPEs, while at the

same time preserving enhanced damages as a strong deterrent to egregiously unfair competitive behavior.

SUMMARY OF ARGUMENT

Outside the patent context, this Court imposes strict limitations on punitive damages in order to control that powerful sanction and ensure that courts deploy it only in extreme cases of egregious conduct. Similar constraints should govern the award of enhanced damages under Section 284, which this Court has recognized as a species of punitive damages. Indeed, the unique characteristics of the patent-infringement context heighten the need for such limitations on punitive awards. Pernicious NPE litigation is already threatening continued innovation. Arming NPEs with the increased ability to credibly demand treble damages will accelerate this disturbing trend. More generally, loosening the test for treble damages risks deterring beneficial innovative behavior and chilling challenges to questionably valid patents.

To be sure, enhanced damages have a place in patent law. They fulfill a necessary, targeted role: to deter the worst kind of infringement, such as a company copying a product from a competitor without any legal basis or refusing to engage in good-faith licensing negotiations despite a patent's clear validity. Without the threat of enhanced damages, these types of infringement would impose heavy costs on patent holders at little risk to the infringer. In such circumstances, damages must be more than the royalty that would have otherwise been paid if the law is to deter this bad-faith and baseless infringement. The lessons of punitive-damages law may be usefully employed to cabin enhanced damages to their proper, limited sphere.

ARGUMENT

I. BECAUSE ENHANCED DAMAGES UNDER SECTION 284 ARE A SPECIES OF PUNITIVE DAMAGES, THE GOVERNING TEST MUST ENSURE THEY REMAIN A RARE EXCEPTION FOR THE MOST EGREGIOUS CASES.

A. This Court has long held that enhanced damages under Section 284 are a type of punitive damages.

As the Government acknowledges, this Court has long recognized that enhanced damages for patent infringement are a form of punitive damages. See United States Br. 13, 16-17. As early as 1853, this Court held under the Patent Act of 1836 that "trebling the actual damages found by the jury" constitutes "vindictive or punitive damages." *Seymour* v. *McCormick*, 57 U.S. 480, 489 (1853). The Court repeated that view a few decades later when it emphasized that enhanced infringement damages are "vindictive or punitive damages." *Tilghman* v. *Proctor*, 125 U.S. 136, 144 (1888). The 1952 recodification did not change the nature of enhanced damages, with the Court continuing to reference the "punitive or 'increased' damages under the statute's trebling provision." *Aro Mfg. Co.* v. *Convertible Top Replacement Co.*, 377 U.S. 476, 508 (1964). In recent years, this Court reaffirmed that approach, classifying Section 284 enhanced damages as "punitive damages." *Florida Prepaid Postsecondary Educ. Expense Bd.* v. *Coll. Sav. Bank*, 527 U.S. 627, 648 n.11 (1999).

That settled framework makes sense. This Court has known since the Patent Act of 1836 that Congress did not intend to treble actual damages for ordinary infringers: "For there is no good reason why taking a man's property in an invention should be trebly punished, while the measure of damages as to other property is single and actual damages." *Seymour*, 57 U.S. at 488-489. Indeed,

an animating purpose of the 1836 Act was to "obviate th[e] injustice" created by the prior statute, which imposed treble damages on all infringers rather than only on those deserving punishment. *Ibid.* Under the 1836 Act and current law, therefore, the enhanced-damages provision may be used only "to punish the defendant" for truly egregious conduct, *id.* at 489, not to reward successful plaintiffs.

B. As with all punitive damages, the law must ensure that enhanced damages under Section 284 are awarded rarely and only in extreme cases.

1. *Punitive damages and enhanced damages under Section 284 are reserved for the worst conduct.*

As a species of punitive damages, enhanced damages under Section 284 must be rare and awarded only to penalize and deter outrageous conduct: "The prevailing rule in American courts * * * limits punitive damages to cases of * * * 'enormity,' where a defendant's conduct is 'outrageous,' owing to 'gross negligence,' 'willful, wanton, and reckless indifference for the rights of others,' or behavior even more deplorable." *Exxon Shipping Co.* v. *Baker*, 554 U.S. 471, 493 (2008). This high threshold exists because punitive damages are "intended to punish the defendant and to deter future wrongdoing" in extreme cases. *Cooper Indus., Inc.* v. *Leatherman Tool Grp., Inc.*, 532 U.S. 424, 432 (2001). Accord *State Farm Mut. Auto. Ins. Co.* v. *Campbell*, 538 U.S. 408, 416 (2003) ("[P]unitive damages * * * are aimed at deterrence and retribution.").

This Court has likewise taken similar measures to limit enhanced damages to the rare, appropriate cases in the Section 284 context. It has restricted their award to cases of "wanton and malicious" conduct, *Seymour*, 57 U.S. at 488, or "willful or bad-faith infringement," *Aro*, 377

U.S. at 508, both attempts to ensure that courts may impose that harsh sanction only on particularly blameworthy infringers. The Court's more recent punitive-damages case law provides a valuable aid in fleshing out these dicta to channel the discretion of courts in a way that deters the most egregious infringing conduct, without chilling innovation that sometimes requires testing the boundaries of old and vague patents.

2. *Enhanced damages are commonly awarded even under the* Seagate *test, cautioning against further weakening that standard.*

An analysis of empirical data on the prevalence of enhanced-damages awards under *Seagate* and its predecessor test provide the Court with a useful perspective as it ensures that enhanced damages under Section 284 remain—like other forms of punitive damages—a rare exception. In *Seagate*, the Federal Circuit reaffirmed its rule that "an award of enhanced damages requires a showing of willful infringement." *In re Seagate Tech., LLC*, 497 F.3d 1360, 1368 (Fed. Cir. 2007). It then turned to defining willfulness in a manner that would give meaningful guidance to the fact finders who decide that issue. *Id.* at 1370-1372. Recognizing that its prior willfulness test set a "lower threshold for willful infringement that is more akin to negligence" and thus "allow[ed] for punitive damages in a manner inconsistent with Supreme Court precedent," the court adopted a new, more vigorous willfulness standard to cabin the award of enhanced damages to their proper sphere. *Id.* at 1371.

Under this new standard, the patent holder must satisfy a two-part test to demonstrate willfulness. First, "a patentee must show by clear and convincing evidence that the infringer acted despite an objectively high likelihood that its actions constituted infringement of a valid patent." *Ibid.* Second, "the patentee must also demonstrate that this objectively-defined risk * * * was either

known or so obvious that it should have been known to the accused infringer." *Ibid.* After an initial finding of willfulness, the judge decides whether and in what amount to award enhanced damages by applying the various factors discussed in *Read Corp.* v. *Portec, Inc.*, 970 F.2d 816, 827 (Fed. Cir. 1992). *Spectralytics, Inc.* v. *Cordis Corp.*, 649 F.3d 1336, 1348 (Fed. Cir. 2011).

Even the *Seagate* test—attacked as overly strict by Petitioners—arguably fails at reserving enhanced damages for rare cases of egregious conduct. Indeed, courts found willfulness in nearly 40% of cases after *Seagate*. Seaman, *Willful Patent Infringement and Enhanced Damages After* In re Seagate: *An Empirical Study*, 97 Iowa L. Rev. 417, 441 (2012). Thus, far from being a rarity, well over a third of cases qualified for enhanced damages even under the rigorous *Seagate* approach. Applying the *Read* factors, courts then awarded enhanced damages in about half of those cases, meaning that one in five cases resulted in an award of enhanced damages. *Id.* at 466. And those awards were usually substantial, with the average total damages award being approximately twice the compensatory damages awarded. *Id.* at 470. Awarding enhanced damages so commonly runs up against the principle that punitive damages must be the exception, not the rule, and should be reserved for extraordinary cases.[5]

---

[5] These statistics vary widely across judicial districts. For example, courts found willfulness in over half the cases filed in the Eastern District of Texas, but in only about a quarter of the cases filed in the District of Minnesota. See Seaman, 97 Iowa L. Rev. at 450-451. This emergence of plaintiff-friendly districts militates against weakening the *Seagate* standard and ceding even more discretion to district courts in this sensitive area. Doing so would only increase already-rampant forum-shopping and further cripple the uniform application of the law.

These data offer a compelling argument for further tightening the legal strictures on the award of enhanced damages. At the very least, they strongly caution against weakening those standards. Under the looser pre-*Seagate* test for willfulness, courts awarded enhanced damages twice as often as they do now—in nearly 40% of cases. See Seaman, 97 Iowa L. Rev. at 441, 466.[6] Punitive damages were almost the norm under that legal regime. Any dilution of the *Seagate* standard will lead to the revival of enhanced damages as an everyday occurrence, in direct contravention of this Court's mandate that punitive damages must be rare and reserved for truly outrageous conduct.

II. THE TEST FOR ENHANCED DAMAGES UNDER SECTION 284 SHOULD INCLUDE CONSIDERATIONS AKIN TO THOSE EMPLOYED IN THE PUNITIVE-DAMAGES CONTEXT.

This Court has carefully limited the award of punitive damages outside of the patent context, and many of those legal constraints should be incorporated to restrict the award of enhanced damages under Section 284. In certain respects, Federal Circuit case law already appropriately mirrors this Court's punitive-damages precedents. In determining the test for enhanced damages under Section 284, the goals should be the same as in the punitive-damages context—developing legal doctrines that restrict enhanced damages to rare and egregious cases, provide clear guidance to fact finders, and allow for meaningful appellate review of enhanced-damages awards.

Drawing on punitive-damages doctrine, a proper interpretation of Section 284 will deter extreme cases of

---

[6] Before *Seagate*, fact finders found willfulness in 48.2% of cases, and the court awarded enhanced damages in 81.4% of those. Seaman, 97 Iowa L. Rev. at 441, 466.

malicious infringement, such as a competitor delaying or refusing to engage in good-faith licensing negotiations despite a clearly valid patent or a business rival copying a patented innovation without any reasonable basis to do so. But enhanced damages must accomplish that vital task without chilling the aggressive innovation that benefits inventors and consumers alike. This Court's punitive-damages case law offers the legal framework to meet both of these critical objectives.

A. The Federal Circuit's *Seagate* test appropriately draws from this Court's punitive-damages jurisprudence.

1. *The* Seagate *test provides clear guidance to fact finders and predictability to litigants.*

This Court has limited punitive damages to cases "where a defendant's conduct is 'outrageous,' owing to 'gross negligence,' 'willful, wanton, and reckless indifference for the rights of others,' or behavior even more deplorable." *Exxon*, 554 U.S. at 493. The Restatement (Second) of Torts echoes this sentiment: "Punitive damages may be awarded for conduct that is outrageous, because of the defendant's evil motive or his reckless indifference to the rights of others." Restatement (Second) of Torts § 908 (1979). The point is that punitive damages should be awarded only against wrongdoers with significantly heightened culpability.

The Federal Circuit's *Seagate* test imports this requirement into the Section 284 enhanced-damages context. Rather than relying on a vague totality-of-the-circumstances approach, the Federal Circuit in *Seagate* created a strict threshold test to separate those without heightened culpability from those who engaged in the kind of outrageous conduct punitive damages are meant to punish. By requiring both "an objectively high likelihood that [the infringer's] actions constituted infringement of a valid patent" and that that risk "was either

known or so obvious that it should have been known to the accused infringer," the court aligned the enhanced-damages standard with the gross negligence or recklessness threshold employed in the punitive-damages context. *Seagate*, 497 F.3d at 1371. In so doing, it advanced the law closer to ensuring that enhanced damages target "the wanton and malicious pirate" rather than the substantially less culpable "defendant who acted in ignorance or good faith." *Seymour*, 57 U.S. at 488.

This bright-line test goes a long way towards allaying concerns about the "stark unpredictability of punitive awards" as well. *Exxon*, 554 U.S. at 499. The *Seagate* test provides fair notice of when alleged infringers will face the daunting prospect of treble damages and when only compensatory damages (and perhaps attorney's fees) will be at stake. In this way, it honors this Court's mandate that "a penalty should be reasonably predictable in its severity, so that even Justice Holmes's 'bad man' can look ahead with some ability to know what the stakes are in choosing one course of action or another." *Id.* at 502. Predictability is especially important in the patent-infringement context, where an amorphous or overly lenient test for enhanced damages could unduly deter innovators designing products in a field littered with unclear patents.

The *Seagate* test also provides clear legal guidance to fact finders. Fact finders wield great power in awarding punitive damages, whether in a tort case or in an infringement action, and with that power comes the need for "proper legal guidance." *Philip Morris USA* v. *Williams*, 549 U.S. 346, 355 (2007). Indeed, "it is constitutionally important for a court to provide assurance that the jury will ask the right question, not the wrong one." *Ibid.* This need for guidance is particularly acute in the legal labyrinth of infringement actions. In these cases, fact finders must answer complicated factual questions

and apply complex legal standards to unfamiliar and technical facts. See Seaman, 97 Iowa L. Rev. at 451 ("[J]uries made the final decision on willfulness over 70% of the time in the Eastern District of Texas * * * [and] just over half [the time] (54.3%, 144 of 265 cases) elsewhere."). Clear and user-friendly legal tests ease this difficulty and make it more likely that fact finders will "ask the right question." *Philip Morris*, 549 U.S. at 355.

If fact finders are left adrift in a sea of factors and asked to undertake a totality-of-the-circumstances analysis to determine "willfulness" or some other threshold question, they have little chance at arriving at the right question to ask, much less the right answer. In contrast, the *Seagate* test focuses fact finders on specific, concrete issues and thus provides them with the guidance they need to fulfill their role. It also protects defendants from the specter of random or arbitrary fact-finder determinations that could chill good-faith innovators from developing new products and challenging potentially invalid patents. In so doing, this approach provides potential defendants "fair notice * * * of the severity of the penalty that * * * may [be] impose[d]," *Philip Morris*, 549 U.S. at 352 (quoting *BMW of N. Am., Inc.* v. *Gore*, 517 U.S. 559, 574 (1996)), and avoids the constitutional pitfall of "arbitrary punishments," *ibid.* (quoting *State Farm*, 538 U.S. at 416, 418).

2. *Petitioners' alternative test will foster unpredictability for both courts and innovators.*

The *Seagate* test is at the very least a good starting point for bringing enhanced damages law into line with the broader concerns that apply to all types of punitive damages. Stryker takes issue with various aspects of the test, but those criticisms miss the mark.

Stryker's preferred method of determining whether an alleged infringer possesses a "heightened degree of

culpability" is an open-ended, totality-of-the-circumstances test that at times descends into ordinary negligence—asking "whether the defendant continued to infringe after it *knew or reasonably should have known* of the patent" and "whether the defendant, when it *knew or should have known* of the patent, *reasonably* investigated and evaluated the possibility of infringement." Stryker Br. 38 (emphases added). But ordinary negligence cannot be grounds for awarding punitive damages. It certainly has not been under this Court's precedents. See *Exxon*, 554 U.S. at 493 (limiting punitive damages to cases where "a defendant's conduct is 'outrageous,' owing to 'gross negligence,' 'willful, wanton, and reckless indifference for the rights of others,' or behavior even more deplorable"). Thus, Stryker's test violates a core tenet of punitive-damages jurisprudence—that this harsh sanction be reserved for rare cases of egregious conduct.

Stryker's free-flowing inquiry also fails to deliver the predictability required for a punitive-damages test. An unchanneled, holistic standard cannot adequately direct fact finders, much less provide the *ex ante* guidance necessary to inform sound decisionmaking about whether to design or market a new product in a disputed area. The result will be the "stark unpredictability of punitive awards" this Court has sought to avoid. *Id.* at 499.

B. This Court should emphasize the importance of certain punitive-damages factors that protect innovation from both vexatious NPE litigation and egregious trampling of intellectual-property rights.

Federal Circuit case law wisely mirrors this Court's punitive-damages precedents in other respects. The Court should incorporate certain Section 284 factors used by the Federal Circuit and emphasize that these factors must be given great weight in determining whether to award enhanced damages.

After a finding of willfulness under *Seagate*'s threshold test, Federal Circuit precedent requires district courts to consider a number of factors in deciding whether and in what amount to award enhanced damages. *Spectralytics*, 649 F.3d at 1348. As the Federal Circuit has observed, "[u]se of these factors in patent cases is in line with punitive damage considerations in other tort contexts." *Read*, 970 F.2d at 827-828.

1. *Enforcing the "motivation for harm" factor punishes bad-faith infringement by competitors while generally prohibiting enhanced damages for NPEs.*

Whether the defendant had a "motivation for harm," *id.* at 827, is one particularly important factor that district courts should be required to weigh heavily. That factor is reflected in this Court's explanation of the reprehensibility inquiry in punitive-damages cases. As the Court describes it in *State Farm*, whether "the harm was the result of intentional malice, trickery, or deceit" is a key consideration in determining the reprehensibility of the defendant's conduct. 538 U.S. at 419. The absence of those and other indicators of reprehensibility "renders any [punitive-damages] award suspect." *Ibid.*; see also *Chicago Title Ins. Corp.* v. *Magnuson*, 487 F.3d 985, 1001 (6th Cir. 2007) (reversing a $32.4 million punitive-damages award because defendant's "behavior was [not] sufficiently reprehensible for an award of punitive damages").

Emphasizing the importance of a "motivation for harm" is particularly well-suited to the infringement context because it distinguishes between suits by fellow competitors and those by NPEs. A defendant may copy a competitor's product with awareness of the competitor's valid patent to harm the competitor's business and secure a competitive advantage. Or a competitor may delay or refuse to engage in good-faith licensing negotia-

tions despite a patent's clear validity, again with the intention to harm its business rival. Both of these are paradigmatic cases of a defendant with a motivation for harm. Cf. *Wellogix, Inc.* v. *Accenture, L.L.P.*, 716 F.3d 867, 885 (5th Cir. 2013) (upholding punitive damages based on a finding of malicious and reprehensible conduct causing plaintiff's business "value [to] plummet[] when [the competitor-defendant] misappropriated the technology").

In contrast, a defendant who infringes on an NPE's patent rarely has a motivation to harm the NPE. By definition, an NPE is not a competitor in the marketplace, and thus competitive harm is not possible. The infringer may have infringed the NPE's patent by accident, negligence, or even out of a desire to develop products and maximize its own profits despite the existence of the NPE's patent. But, unlike with a fellow competitor, there is no specific motivation to harm the NPE. Thus, this factor will weigh heavily against awarding enhanced damages in NPE cases.

2. *An emphasis on punishing bad-faith copying and refusal to negotiate deters the worst kinds of infringement without unnecessarily arming NPEs with the threat of enhanced damages.*

Two other important considerations that this Court should emphasize are "whether the infringer deliberately copied the ideas or design of another" and "whether the infringer, when he knew of the other's patent protection, investigated the scope of the patent and formed a good-faith belief that it was invalid or that it was not infringed." *Read*, 970 F.2d at 827. These factors translate to the infringement context the reprehensibility consideration of whether the "conduct evinced an indifference to or a reckless disregard of the health or safety of others." *State Farm*, 538 U.S. at 419. Under these factors,

only truly egregious, bad-faith conduct will satisfy the subjective requirement for enhanced damages. Knowingly copying another's validly patented product or delaying or refusing to negotiate for reasonable licensing fees for that product serves no societal value.

Emphasizing these two factors will largely prevent enhanced damages in NPE cases. NPEs do not have products, which makes it nearly impossible for an infringer to deliberately copy an NPE's idea or design. Only the egregious case of an infringer discovering an NPE's patent and then directly copying the idea would typically satisfy that factor.

Additionally, NPEs, unlike operating companies, rarely give notice of the alleged infringement before filing suit. See Love, *An Empirical Study of Patent Litigation Timing: Could A Patent Term Reduction Decimate Trolls Without Harming Innovators?*, 161 U. Pa. L. Rev. 1309, 1354 (2013). That is because NPEs place a high priority on obtaining venue in one of their favored judicial districts. They dare not risk tipping off an alleged infringer for fear that he will file a declaratory judgment action in some other district before the NPE can file suit. See *ibid.* Thus, in the vast majority of NPE cases the moment "when [the alleged infringer] knew of the other's patent protection" is the same time the NPE filed suit. *Read*, 970 F.2d at 827. And if the relevant time period is when litigation commences, an alleged infringer will nearly always either "investigate[] the scope of the patent and form[] a good-faith belief that it was invalid or that it was not infringed" or else settle the case if he realizes he possesses no colorable defense. *Ibid.* Consequently, this important consideration in awarding enhanced damages will almost always be absent from NPE cases.

The common scenario in NPE litigation described above also refutes the Government's concerns with the

Federal Circuit's objective threshold for willfulness, which bars enhanced damages so long as the defendant presents objectively reasonable defenses at trial. The Government urges that any test of objective reasonableness must measure only the legal defenses of which the defendant was aware at the time of the allegedly willful infringement, not at the time of trial. United States Br. 25, 29-31. In the NPE scenario described above, however, these two timeframes converge: The defendant becomes aware of possible infringement at essentially the same time that litigation commences, and the defendant is only then able to develop his defenses for the first time. Thus, there is no possibility of post-hoc rationalizations shielding bad-faith behavior in the typical NPE case. As a result, the Government's attack on the Federal Circuit's objective test is a red herring in the context of much NPE litigation—which now constitutes over two-thirds of all patent litigation.[7]

3. *These punitive-damages considerations protect against unfair competition while limiting the* in terrorem *effect of NPE lawsuits.*

By requiring district courts to scrutinize the three factors discussed above, the Court would meaningfully differentiate between competitor and NPE lawsuits. This would alleviate the worst chilling effects that enhanced damages can have on innovation. More and more, those who invest the billions of dollars required to develop new products must pay a steep and ever-rising tax to NPEs who engage in no creative activity whatsoever. Costs to defend and resolve NPE suits have increased 18% per

---

[7] RPX Corp., 2015 NPE Activity: Highlights 4 (2016), https://www.rpxcorp.com/wp-content/uploads/sites/2/2016/01/RPX-2015-NPE-Activity-Highlights-FinalZ.pdf.

year on average from 2009 to 2014.[8] And in 2014 alone, companies spent more than $12 billion to resolve NPE patent disputes.[9] This disturbing trend has been accompanied by an alarming rise in NPE activity, which grew from 640 cases filed in 2009 to 2,791 cases filed in 2014.[10] The problem is real, and it continues to grow.

A company faced with an NPE suit has only bad options. It can spend huge sums of money defending the case and risk a potentially large adverse verdict or it can pay the ransom and settle the perhaps borderline-frivolous case. Members of this Court have expressed their concern about "increas[ing] the *in terrorem* power of patent trolls," and for good reason. *Commil USA, LLC* v. *Cisco Sys., Inc.*, 135 S. Ct. 1920, 1932 (2015) (Scalia, J., dissenting). But granting NPEs easier access to the awesome power of treble damages would do just that. Fewer companies will be willing to risk going to trial against NPEs if the prospect of commonly available treble damages is hanging over them. Many more will choose the path of least resistance.

As importantly, rational companies must weigh the projected costs of infringement suits, and particularly the all-too-common NPE suits, against the potential revenue of a new product. Each increase in those costs—and especially the substantial increase that would result from easing the restraints on treble damages—means that fewer innovations will be worth the considerable trouble of inventing.

At the same time, enhanced damages play an indispensable role in patent law. Without enhanced damages,

---

[8] RPX Corp., 2014 NPE Cost Report: High-level Findings 10 (2015), https://www.rpxcorp.com/wp-content/uploads/sites/2/2015/05/RPX-2014-NPE-Cost-Report-ZZFinal.pdf.

[9] *Ibid.*

[10] *Ibid.*

a would-be infringer has little to lose by deliberating copying a patented product and refusing overtures to negotiate a reasonable royalty. Even if the infringer loses in litigation, the damages will be only the royalty it would have otherwise paid. Yet the patent holder will suffer not only litigation expenses, but often irreparable harm to its business. Enhanced damages exist to deter this particularly harmful type of willful infringement that brazenly disrespects a patent holder's intellectual property rights without any legal basis to do so. This core function of enhanced damages must be preserved.

By elevating the importance of these three punitive-damages considerations that allow treble damages against competitors in appropriate instances—but almost always prohibit them in NPE cases—the Court can eliminate the bulk of the chilling effects that treble damages have on beneficial innovation while also maintaining them as a strong deterrent against the worst types of infringement.

C. As with punitive damages, courts should award enhanced damages only when necessary to deter future wrongdoing.

1. *Enhanced damages must deter flagrant disregard of intellectual property rights without discouraging challenges to patents generally.*

The centrality of deterrence to punitive-damages awards should apply equally to enhanced-damages awards under Section 284. This Court's punitive-damages cases uniformly hold that deterrence is a principal aim of punitive damages. See *Exxon*, 554 U.S. at 492 ("[P]unitives are aimed * * * principally at retribution and deterring harmful conduct."); *Cooper*, 532 U.S. at 432 (punitive damages are "intended to punish the defendant and to deter future wrongdoing"). Indeed, "punitive damages should *only* be awarded if the defendant's

culpability, after having paid compensatory damages, is so reprehensible as to warrant the imposition of further sanctions to achieve punishment or deterrence." *State Farm*, 538 U.S. at 419 (emphasis added).

Achieving the appropriate level of deterrence is all the more crucial in the patent-infringement arena. The consequences of over-deterrence in this area are especially severe—the chilling of innovation. After all, "good faith challenges to the validity or scope of patent rights should be encouraged rather than punished" because they help police the system and enable further innovation. 7 Chisum on Patents § 20.03[4][b][iii] (2009). Given these countervailing considerations, the harsh sanction of enhanced damages must be wielded reluctantly and only in the face of egregious conduct.

Compensatory damages and the steep cost of litigation already deter much infringing behavior. Indeed, those considerations have prompted companies like Huawei to engage in a rigorous (and expensive) review of similar technologies and any corresponding patents before proceeding with developing a new invention. See *Mayo Collaborative Servs.* v. *Prometheus Labs., Inc.*, 132 S. Ct. 1289, 1305 (2012) (recognizing that innovators must conduct "costly and time-consuming searches of existing patents and pending patent applications"). That task often proves futile or overwhelming given the sheer volume of material and the constraints of time and cost. For example, in the software industry, "[e]ven if a patent lawyer only needed to look at a patent for ten minutes, on average, to determine whether any part of a particular firm's software infringed it, it would require roughly two million patent attorneys, working full-time, to compare every firm's products with every patent." Mulligan & Lee, *Scaling the Patent System*, 68 N.Y.U. Ann. Surv. Am. L. 289, 304-305 (2012). Given the deterrent effect already in evidence, making enhanced damages more widely availa-

ble is unnecessary and would only exacerbate the burdens borne by innovators.

That is not to say that enhanced damages have no deterrent role to play in certain cases. These punitive damages should only be awarded to deter truly outrageous conduct, such as deliberately copying a competitor's patented product or delaying or refusing to engage in good-faith licensing negotiations despite full knowledge of the valid patent. An infringer who takes those extreme steps, either out of bad faith or indifferent recklessness, requires additional deterrence beyond the compensatory damages and litigation costs that are sufficient in the vast majority of cases. That is the proper place to deploy the rare sanction of enhanced damages. The standard for awarding enhanced damages must therefore precisely differentiate between ordinary infringement and egregious conduct requiring additional deterrence.

2. *Deterrence rarely justifies awarding enhanced damages in NPE cases.*

The deterrent purpose of punitive damages largely rules out enhanced damages for NPEs. A would-be infringer of an NPE's patent stands to gain only the licensing fees it would have otherwise paid, whereas a would-be infringer of a competitor's patent avoids licensing fees *and gains increased market share* by providing those patented products at a lower price. The greater the potential reward, the greater the deterrent must be.[11] Thus, enhanced damages serve an appropriate deterrent function primarily in suits by competitors—not NPEs.

---

[11] It is worth noting that the median damages award in NPE cases is currently over four times that in non-NPE cases. PricewaterhouseCoopers LLP, 2015 Patent Litigation Study 4 (May 2015), http://www.pwc.com/us/en/forensic-services/publications/assets/2015-pwc-patent-litigation-study.pdf. Accepting Petitioners' invitation to lower the bar for enhanced damages would thus result in further windfalls to NPEs untethered to any reasonable need for deterrence.

Equitable considerations support this approach as well. An NPE typically makes its money on licensing fees, not by making a better product or providing better services. Thus, infringement causes an NPE to lose only those licensing fees. Compensatory damages (and perhaps attorney's fees in "exceptional" cases) will make the NPE whole. By contrast, these traditional damages may not be able to capture the irreparable harm that a pirated product can do to a competitor's business. Thus, some form of additional damages may be necessary to deter in this latter situation, but clearly not in the former.

D. Enhanced damages, like punitive damages, must be subject to searching appellate review.

This Court should require rigorous appellate review of enhanced-damages awards, just as it has for punitive-damages awards more generally. In a punitive-damages case, the court conducts an evidentiary-sufficiency review of the jury's threshold findings that make the case eligible for punitive damages and then reviews de novo the district court's application of the constitutional factors that limit the availability and amount of punitive damages. See, *e.g.*, *Wellogix*, 716 F.3d at 883-884. The Federal Circuit, too, currently reviews the different determinations underpinning an award of enhanced damages with varying degrees of deference. The first prong of the *Seagate* test, which focuses on the objective risk of infringement, is reviewed de novo. *Bard Peripheral Vascular, Inc.* v. *W.L. Gore & Assocs., Inc.*, 682 F.3d 1003, 1008 (Fed. Cir. 2012). The second prong of that test, which asks whether the defendant knew or should have known of that risk, is reviewed for substantial evidence. *Ibid.* Then, the district court's decision of whether and in what amount to award enhanced damages under the *Read* factors is reviewed for abuse of discretion. *Spectralytics*, 649 F.3d at 1347.

The standards of review for the two prongs of the *Seagate* test stem from their legal and factual nature, respectively. Because the assessment of whether there is an objectively high risk of infringement is a question of law, it must be reviewed de novo. *Bard*, 682 F.3d at 1006-1007. Indeed, that question often comes down to an "objective assessment"—"whether a 'reasonable litigant could realistically expect' those defenses to succeed." *Id.* at 1006, 1008. The relative strength or weakness of legal defenses is an issue for judges, not juries. Likewise, because whether the defendant knew or should have known about the infringement risk is a question of fact, it must be reviewed for substantial evidence. *Id.* at 1008.

Abuse-of-discretion review of the district court's ultimate decision to award enhanced damages is more troubling. In the broader punitive-damages context, this Court has stressed the need for "[e]xacting appellate review" of punitive-damages awards. *State Farm*, 538 U.S. at 418. While that exacting review may be possible with a particularly rigorous abuse-of-discretion analysis focusing heavily on the legal conclusions underlying the award of enhanced damages, a de novo standard of review accomplishes this goal much more naturally. Indeed, "courts of appeals should apply a de novo standard of review when passing on district courts' determinations of the constitutionality of punitive damages awards." *Cooper*, 532 U.S. at 436. That de novo standard should govern a district court's assessment of enhanced damages under Section 284 as well. The same need for careful review of a powerful remedy exists here.

Rigorous appellate review is arguably even more important in patent cases because NPEs tend to file suit in districts "perceived as favorable" to plaintiffs. See Seaman, 97 Iowa L. Rev. at 449; see also Leychkis, *Of Fire Ants and Claim Construction: An Empirical Study of the Meteoric Rise of the Eastern District of Texas As A*

Preeminent Forum for Patent Litigation, 9 Yale J.L. & Tech. 193, 206 (2007) ("Plaintiff patent holders and their attorneys love the Eastern District of Texas."). De novo review of these awards would ensure uniform application of the law, which is essential to cabin this powerful punitive measure and neutralize forum-shopping by litigants.

CONCLUSION

Huawei respectfully requests that the judgments of the Court of Appeals be affirmed.

Respectfully submitted.

AARON M. STREETT
Counsel of Record
J. MARK LITTLE
BAKER BOTTS L.L.P.
910 Louisiana St.
Houston, Texas 77002
(713) 229-1855
aaron.streett@bakerbotts.com

Counsel for Amicus Curiae Huawei Technologies Co., Ltd.

January 2016

Supreme Court, U.S.
FILED
DEC 16 2015
OFFICE OF THE CLERK

Nos. 14-1513, 14-1520

In the Supreme Court of the United States

HALO ELECTRONICS, *Petitioner,*

v.

PULSE ELECTRONICS, INC., ET AL., *Respondents.*

STRYKER CORPORATION, ET AL., *Petitioners,*

v.

ZIMMER, INC., ET AL., *Respondents.*

On Writs of Certiorari to the United States Court of Appeals for the Federal Circuit

BRIEF OF *AMICUS CURIAE* INNOVENTION TOYS, LLC IN SUPPORT OF PETITIONERS

JAMES C. OTTESON
Counsel of Record
DAVID A. CAINE
THOMAS T. CARMACK
ARNOLD & PORTER, LLP
Suite 110
1801 Page Mill Road
Palo Alto, CA 94304-1216
Telephone: (650) 798-2920
james.otteson@aporter.com

Counsel for Amicus Curiae

Table of Contents

Page

Table of Contents i

Table of Authorities ii

Interest of *Amicus Curiae* 1

Introduction and Summary of Argument 2

Argument 4

I. Willfulness Should Be Based on a Totality of the Circumstances 4

II. Willfulness Should be Treated as a Factual Determination That is Reviewed for Substantial Evidence/Clear Error. 10

III. The Standard of Proof for Willfulness Should Be A Preponderance of the Evidence 12

IV. Section 284 Gives "*The Court*" Discretion to Enhance Damages; a District Court's Enhancement of Damages Should Be Reviewed for an Abuse of Discretion 13

V. Enhancement of Damages Under Section 284 Should Not Require a Finding of Willfulness 15

Conclusion 15

Table of Authorities

Page(s)

Cases

A.C. Aukerman Co. v. R.L. Chaides Constr. Co., 960 F.2d 1020 (Fed. Cir. 1992) 6

Akamai Techs., Inc. v. Cable & Wireless Internet Servs., Inc., 344 F.3d 1186 (Fed. Cir. 2003) 11, 12

Amsted Indus., Inc. v. Buckeye Steel Castings Co., 24 F.3d 178 (Fed. Cir. 1994) 14

Aro Mfg. Co. v. Convertible Top Replacement Co., 377 U.S. 476 (1964) 15

Bard Peripheral Vascular, Inc. v. W.L. Gore & Assocs., Inc., 682 F.3d 1003 (Fed. Cir. 2012) 4, 7, 8

Bott v. Four Star Corp., 807 F.2d 1567 (Fed. Cir. 1986) 5, 6, 8

Braun Inc. v. Dynamics Corp. of Am., 975 F.2d 815 (Fed. Cir. 1992) 10

Central Soya Co., Inc. v. Geo. A. Hormel & Co., 723 F.2d 1573 (Fed. Cir. 1983) 6, 8

Dennison Mfg. Co. v. Panduit Corp., 475 U.S. 809 (1986) (per curiam) 11

Farmer v. Brennan, 511 U.S. 825 (1994) 6

Fishman Transducers, Inc. v. Paul, 684 F.3d 187 (1st Cir. 2012) 7

Graham v. John Deere Co., 383 U.S. 1 (1966) 9, 10, 11, 12

Halo Electronics, Inc. v. Pulse Electronics, Inc., 769 F.3d 1371 (Fed. Cir. 2014) (O'Malley, J., concurring) 12, 13, 14

Halo Electronics, Inc. v. Pulse Electronics, Inc., 780 F.3d 1357 (Fed. Cir. 2015) (O'Malley, J., dissenting, joined by Hughes, J.) 5, 8

Halo Electronics, Inc. v. Pulse Electronics, Inc. (Docket No. 14-1513) 2, 4, 16

Herman & MacLean v. Huddleston, 459 U.S. 375 (1983) 13

Highmark Inc. v. Allcare Health Mgmt. Sys., Inc., 134 S. Ct. 1744 (2014) 2, 3, 5, 14

Hoechst Celanese Corp. v. BP Chems. Ltd., 78 F.3d 1575 (Fed. Cir. 1996) 9

In re Seagate Tech., LLC, 497 F.3d 1360 (Fed. Cir. 2007) ..... *passim*

Innovention v. MGA, (611 F. App'x 693 (Fed. Cir. 2015) 12

Innovention Toys, LLC v. MGA Entertainment, No. 15-635 (U.S. Nov. 10, 2015), 2015 WL 7180653 .....2, 4, 9, 11, 12

Nat'l Presto Indus., Inc. v. West Bend Co., 76 F.3d 1185 (Fed. Cir. 1996).....10, 14

Octane Fitness, LLC v. ICON Health & Fitness, Inc., 134 S. Ct. 1749 (2014) .....*passim*

Pierce v. Underwood, 487 U.S. 552 (1988) 3, 14

Professional Real Estate Investors, Inc. v. Columbia Pictures Industries, Inc., 508 U.S. 49 (1993) 7, 8

Read Corp. v. Portec, Inc., 970 F.2d 816 (Fed. Cir. 1992)..... 9

Safeco Ins. Co. of Am. v. Burr, 551 U.S. 47 (2007) 6, 15

SRI Int'l, Inc. v. Advanced Tech. Labs., Inc., 127 F.3d 1462 (Fed. Cir. 1997) 5, 8, 10, 14, 15

Stryker Corp. v. Zimmer, Inc. (Docket No. 14-1520) 2, 4, 16

Teva Pharm. USA, Inc. v. Sandoz, Inc., 135 S. Ct. 831 (2015) 10, 11

TXO Prod. Corp. v. Alliance Res. Corp., 509 U.S. 443 (1993) 7

Vulcan Eng'g Co., Inc. v. Fata Aluminum, Inc., 278 F.3d 1366 (Fed. Cir. 2002) 10

Zenith Radio Corp. v. Hazeltine Research, Inc., 395 U.S. 100 (1969) 11

Statutes

35 U.S.C.
§ 284 ..... *passim*
§ 285 ..... *passim*
§ 298 9

Other Authorities

Restatement (Second) of Torts § 500 (Am. Law Inst. 1965) 6, 7

W. Keeton, et al., *Prosser and Keeton on Law of Torts* § 34 (5th Edition 1984) 7

Interest of *Amicus Curiae*

Innovention Toys, LLC ("Innovention"),[1] is a small Louisiana toy company that was formed by a former Tulane professor and two of his students to make and sell their patented invention: an innovative strategy board game called "Khet," which includes movable pieces with lasers and mirrors. Innovention's Khet game was knocked off by toy giant MGA Entertainment, Inc. ("MGA")—the "Bratz" doll company. After nearly seven years of litigation, Innovention finally obtained a final judgment of willful patent infringement, along with treble damages and attorney fees.

Unfortunately, Innovention then fell victim to the Federal Circuit's arcane and unworkable two-prong test for willful infringement under 35 U.S.C. § 284. In its opinion reversing the district court's decision on willfulness, the court of appeals inexplicably found that MGA's flimsy obviousness defense was "objectively reasonable"—improperly substituting its own judgment for that of both the jury and the trial court, which were much closer to the evidence. Innovention filed a petition for writ of *certiorari* on November 10, 2015. *See* Pet. for Writ of

---

[1] No counsel for a party authored this brief in whole or in part. No one other than *amicus curiae* or its counsel made a monetary contribution intended to fund the preparation or submission of this brief. Other than respondent Zimmer, Inc. (Docket No. 14-1520), all parties in the two consolidated cases have filed waivers consenting to the submission of briefs by *amici curiae*. However, Innovention concurrently files with the Clerk of the Court a letter of consent from Zimmer, Inc. for the filing of this brief.

Certiorari, *Innovention Toys, LLC v. MGA Entertainment, et al.*, No. 15-635 (U.S. Nov. 10, 2015), 2015 WL 7180653 ("*Innovention* Pet.").

Accordingly, *amicus* Innovention has a direct and substantial interest in the issues presented, and respectfully submits this brief in support of the positions of the petitioners in the two cases that are consolidated before the Court: *Halo Electronics, Inc. v. Pulse Electronics, Inc.* (Docket No. 14-1513) and *Stryker Corp. v. Zimmer, Inc.* (Docket No. 14-1520). Innovention agrees with the petitioners in those cases that the Court should reject the Federal Circuit's rigid two-prong standard for willful infringement under Section 284. In its place, Innovention respectfully submits that the Court should reinstate more flexible standards that are consistent with both prior precedent and this Court's decisions relating to 35 U.S.C. § 285, a statute with language that is very similar to the relevant passage in Section 284. *See Octane Fitness, LLC v. ICON Health & Fitness, Inc.*, 134 S. Ct. 1749 (2014), and *Highmark Inc. v. Allcare Health Mgmt. Sys., Inc.*, 134 S. Ct. 1744 (2014).

Introduction and Summary of Argument

Amicus Innovention respectfully asks this Court to correct the Federal Circuit's standards for both the determination and review of willful infringement and enhancement of damages under Section 284, especially in light of the Court's decisions in *Octane Fitness* and *Highmark*. Willfulness should simply be based on a consideration of the totality of the circumstances (including all subjective and objective factors), and

should be decided as a factual issue that is reviewed for substantial evidence (if decided by the jury), or clear error (if decided by the district court). This standard for willfulness would be consistent with the Court's interpretation of Section 285 for the determination of "exceptional case" and attorney fees, as set forth in *Octane Fitness*. To conform the standard for willful patent infringement to the Court's prior precedents, the standard of proof for willfulness should also be preponderance of the evidence, not clear and convincing evidence.

A district court's enhancement of damages under Section 284 should also be reviewed under an abuse of discretion standard. As with awards of attorney fees under Section 285, "the district court is 'better positioned' to decide" whether enhanced damages are appropriate, "because it lives with the case over a prolonged period of time." *Cf. Highmark*, 134 S. Ct. at 1748 (quoting *Pierce v. Underwood*, 487 U.S. 552, 559-60 (1988)). Each enhancement decision "is 'multifarious and novel,' not susceptible to 'useful generalization' of the sort that *de novo* review provides." *Id.* at 1748-49 (same). Finally, consistent with this Court's precedents, enhancement of damages under Section 284 should not require a finding of willful infringement.

The Court's correction of these standards will prevent future situations in which the Federal Circuit improperly substitutes its own judgment about the supposed "objectiveness" of a defense for the reasoned judgment of a district court—which is much closer to the case—regarding *all* of the circumstances relevant to enhancement and willfulness. The case involving *amicus* Innovention

provides a pointed example. After hearing all of the evidence, the jury in that case found that defendant MGA willfully infringed Innovention's patent. The district court then issued a 63-page order in which it performed a detailed analysis of all of the factors—both "subjective" and "objective"—regarding MGA's willful infringement. This included detailed evidence of MGA's copying of the patented invention, MGA's knowledge of the patent, and MGA's substantial litigation misconduct, including its attempt to use the attorney-client privilege as both a sword and a shield to prevent inquiry into MGA's lack of any good faith justification for its copying and infringement of the valid patent of a much smaller competitor. *See Innovention* Pet. at 10-18.

Accordingly, *amicus* Innovention respectfully asks the Court to use the consolidated *Halo* and *Stryker* cases as a vehicle to correct the Federal Circuit's jurisprudence regarding willfulness and enhancement of damages under Section 284.

Argument

I. WILLFULNESS SHOULD BE BASED ON A TOTALITY OF THE CIRCUMSTANCES.

The test for willful patent infringement under Section 284 should be based on a totality of the circumstances, regardless of whether any particular factor is "objective" or "subjective." The Federal Circuit's decisions in *In re Seagate Tech., LLC*, 497 F.3d 1360 (Fed. Cir. 2007), and *Bard Peripheral Vascular, Inc. v. W.L. Gore & Assocs., Inc.*, 682 F.3d 1003 (Fed. Cir. 2012), created a two-prong willfulness test that needs to be corrected in view of *Octane*

Fitness and *Highmark*. When the Federal Circuit decided *Seagate* in 2007, Judge Newman foresaw "new uncertainties . . . introduced by the court's evocation of 'objective standards' for such inherently subjective criteria as 'recklessness' and 'reasonableness.'" *Seagate*, 497 F.3d at 1385 (Newman, J., concurring).

Time has confirmed that the *Seagate* test is an "artificial and awkward construct," much like the Federal Circuit's former test for "exceptional case" under § 285, which this Court overruled in *Octane Fitness*. As several Federal Circuit judges have already recognized:

> In rejecting the rigid two-prong, subjective/objective test for § 285 under *Brooks Furniture*, moreover, the Supreme Court told us to employ a flexible totality of the circumstances test. . . We should now assess whether a [similar] flexible test . . . is also appropriate for an award of enhanced damages.

Halo Electronics, Inc. v. Pulse Electronics, Inc. ("*Halo 2015*"), 780 F.3d 1357, 1362-63 (Fed. Cir. 2015) (O'Malley, J., dissenting, joined by Hughes, J.).

Before *Seagate*, the test for willfulness was based on a "totality of the circumstances." *See, e.g.*, *SRI Int'l, Inc. v. Advanced Tech. Labs., Inc.*, 127 F.3d 1462, 1465 (Fed. Cir. 1997) ("The court will determine whether the advice of noninfringement or invalidity or unenforceability could have reasonably been relied on, and whether, on the totality of the circumstances, exculpatory factors avert a finding of willful infringement."); *Bott v. Four Star Corp.*, 807

F.2d 1567, 1572 (Fed. Cir. 1986), *overruled on other grounds by A.C. Aukerman Co. v. R.L. Chaides Constr. Co.*, 960 F.2d 1020, 1038-39 (Fed. Cir. 1992) ("In determining whether an infringer acted in bad faith as to merit an increase in damages awarded against him, the court will consider the totality of the circumstances . . . "); *Central Soya Co., Inc. v. Geo. A. Hormel & Co.*, 723 F.2d 1573, 1577 (Fed. Cir. 1983) ("It is necessary to look at 'the totality of the circumstances presented in the case' in determining whether a reasonable person would prudently conduct himself with any confidence that the courts might hold the patent invalid." (internal citation omitted)).

Reading *Safeco Ins. Co. of Am. v. Burr*, 551 U.S. 47 (2007), the Federal Circuit adopted the objective/subjective willfulness test. *Seagate*, 497 F.3d at 1370-72. But *Safeco* did not create a two-prong test for willfulness—much less suggest one for patent infringement. Rather, *Safeco* equated willful violations of the Fair Credit Reporting Act ("FCRA") with common law "recklessness." *Safeco*, 551 U.S. at 56-60. The Court noted:

> While "the term recklessness is not self-defining," the common law has generally understood it in the sphere of civil liability as conduct violating an objective standard: action entailing "an unjustifiably high risk of harm that is either known or so obvious that it should be known."

551 U.S. at 68-69 (citing *Farmer v. Brennan*, 511 U.S. 825, 836 (1994); Restatement (Second) of Torts § 500

(Am. Law Inst. 1965); W Keeton, et al., *Prosser and Keeton on Law of Torts* § 34 (5th ed.1984)).

But under tort law, including other business torts like trademark infringement, courts routinely allow juries to determine willfulness as a fact issue, with appropriate instructions from the trial court. *See, e.g., Fishman Transducers, Inc. v. Paul*, 684 F.3d 187, 191-93 (1st Cir. 2012) (question of willfulness decided by jury). Indeed, a determination of willfulness under tort law does not mandate separate decisions by the court and the jury on objective and subjective recklessness. Rather, with proper instructions, the jury can decide the entire question of willfulness (or recklessness), which is largely fact-driven. *See, e.g., TXO Prod. Corp. v. Alliance Res. Corp.*, 509 U.S. 443, 463 n.29 (1993) (affirming jury verdict of punitive damages for slander of title based on jury's finding of "wanton, willful, malicious or reckless conduct," where jury was instructed to "take into consideration all of the circumstances surrounding the particular occurrence").

The Federal Circuit's *Bard* decision amplified the difficulties of *Seagate*. As Judge O'Malley observed, the *Seagate/Bard* two-step test closely parallels the now overruled *Brooks Furniture* test for attorney fees under § 285, which were both predicated on *Professional Real Estate Investors, Inc. v. Columbia Pictures Industries, Inc.* ("*PRE*"), 508 U.S. 49 (1993):

> We have gone so far, moreover, to require that an evidentiary wall be erected between the objective and subjective portions of the inquiry.

> We preclude considerations of subjective bad faith—no matter how egregious—from informing our inquiry of the objective baselessness of a claim and preclude the weakness [of] a claim or defense from being indicative of a [party's] subjective bad faith. *We now know that the artificial and awkward construct we had established for § 285 claims is not appropriate. We should assess whether the same is true with respect to the structure we continue to employ under § 284.*

Halo 2015, 780 F.3d at 1362 (O'Malley, J., dissenting) (emphasis added) (citations omitted). Indeed, *Octane Fitness* held that "[t]he Federal Circuit's formulation [in *Brooks Furniture*] is overly rigid," and the subjective/ objective "formulation superimposes an inflexible framework onto statutory text that is inherently flexible." *Octane Fitness*, 134 S. Ct. at 1756. Like § 285, "there is nothing in the text of § 284 that justifies the use of the *PRE* narrow standard." *Halo 2015*, 780 F.3d at 1362 (O'Malley, J., dissenting).

Amicus Innovention urges the Court to reinstate the "totality of the circumstances" test that was applied for decades prior to *Seagate* and *Bard*. *See, e.g., SRI Int'l, Inc.*, 127 F.3d at 1465; *Bott*, 807 F.2d at 1572; *Central Soya Co., Inc.*, 723 F.2d at 1577. Based on these and other cases, a "totality of the circumstances" should include consideration of both subjective and objective factors, including, for example: (1) deliberate copying or independent invention; (2) attempts to design around; (3) investigation of infringement and validity; (4) reasonableness of defenses actually presented;

(5) timing of development of a defense; (6) failure to apply the court's claim construction; and (7) litigation conduct. *See Read Corp. v. Portec, Inc.*, 970 F.2d 816, 826-27 (Fed. Cir. 1992) (outlining non-exclusive factors for consideration in determining whether to enhance damages based on totality of circumstances), *superseded on other grounds as recognized by Hoechst Celanese Corp. v. BP Chems. Ltd.*, 78 F.3d 1575 (Fed. Cir. 1996). Of course, failure to obtain or present as evidence advice of counsel would not be considered. *See* 35 U.S.C. § 298 (2012).

A correction of the standard for willful infringement will prevent future situations in which the Federal Circuit improperly substitutes its own judgment for that of trial court—even when almost all of the relevant factors favor the patent holder. For example, in the case that is the subject of Innovention's currently pending petition for writ of *certiorari*, an application of the totality of the circumstances test would have compelled affirmance of the district court's judgment of willful infringement. In that case, MGA deliberately copied Innovention's patented game, had no reasonable defense (it failed on every contested obviousness factor under *Graham v. John Deere Co.*, 383 U.S. 1 (1966)), presented no evidence of any investigation of noninfringement or invalidity, failed to apply the district court's claim construction, engaged in misconduct throughout the litigation, and employed particularly aggressive tactics immediately prior to and during trial. *See Innovention* Pet. at 5-18. In similar situations, district courts and juries should be permitted to find willful infringement—regardless of whether three appellate judges believe that an unsupported defense was nevertheless "reasonable."

II. WILLFULNESS SHOULD BE TREATED AS A FACTUAL DETERMINATION THAT IS REVIEWED FOR SUBSTANTIAL EVIDENCE/CLEAR ERROR.

Amicus Innovention respectfully asks the Court to return to the prior rule that willfulness is a question of fact to be reviewed for substantial evidence (if decided by a jury) or clear error (if decided by the district court). Indeed, the same fact-finder that considers the factual issues relating to infringement, anticipation, and the *Graham* obviousness factors is well-positioned to decide whether the infringer acted willfully. *See, e.g.*, *Vulcan Eng'g Co., Inc. v. Fata Aluminum, Inc.*, 278 F.3d 1366, 1378 (Fed. Cir. 2002) (willfulness is a factual question, reviewed for clear error); *SRI Int'l, Inc. v. Advanced Tech. Labs., Inc.*, 127 F.3d 1462, 1465 (Fed. Cir. 1997) ("[A]ppellate review requires appropriate deference to the special role of the trial court in making such determinations."); *Nat'l Presto Indus., Inc. v. West Bend Co.*, 76 F.3d 1185, 1193 (Fed. Cir. 1996) (same); *Braun Inc. v. Dynamics Corp. of Am.*, 975 F.2d 815, 822 (Fed. Cir. 1992) (jury's determination reviewed for substantial evidence).

Indeed, the Court recently considered appellate review in patent cases for issues involving factual determinations, similar to willfulness. In *Teva Pharm. USA, Inc. v. Sandoz, Inc.*, 135 S. Ct. 831 (2015), the Court held that underlying factual findings in support of a trial court's decision on claim construction are subject to deferential "clear error" review. Significantly, the Court drew a parallel between the fact-finding necessary for both claim construction and obviousness, and emphasized that

these "'subsidiary determinations of the District Court'" may be reviewed only for clear error. *Id.* at 838 (quoting *Dennison Mfg. Co. v. Panduit Corp.*, 475 U.S. 809, 811 (1986) (per curiam)). Importantly, willfulness requires at least as much subsidiary fact-finding as obviousness or claim construction.

As *Teva* makes clear, the Federal Circuit (like any other appellate court) may not freely reject or ignore factual findings of the district court. To the contrary, "appellate courts must constantly have in mind that their function is not to decide factual issues *de novo*." *Zenith Radio Corp. v. Hazeltine Research, Inc.*, 395 U.S. 100, 123 (1969). Respect for factual findings is "particularly" vital in the technical and often-complex battleground of patent disputes, where the trier of fact "has presided over, and listened to, the entirety of a proceeding [and so] has a comparatively greater opportunity to gain that familiarity than an appeals court judge who must read a written transcript or perhaps just those portions to which the parties have referred." *Teva*, 135 S. Ct. at 838.

These concerns are heightened when a jury has made specific factual findings on issues like copying, willfulness, and the *Graham* obviousness factors—as in the case relating to Innovention's pending petition for writ of *certiorari*. *See Innovention* Pet. at 10-11. Jury findings are reviewed for substantial evidence, *see, e.g., Akamai Techs., Inc. v. Cable & Wireless Internet Servs., Inc.*, 344 F.3d 1186, 1192 (Fed. Cir. 2003), a standard among the most deferential in law. Under this deferential standard, the appellate court "must draw all reasonable inferences in favor of the prevailing

party, and not make credibility determinations or substitute [its] view of the conflicting evidence for that of the jury." *Id.* Yet, in *Innovention v. MGA*, the Federal Circuit improperly imposed its own judgment that "the gap between the prior art and Innovention's claims" was "not particularly large," (611 F. App'x 693, 700 (Fed. Cir. 2015))—ignoring the factual findings of the district court and the jury that MGA had failed on every *Graham* factor, including the fact that there were differences between the prior art and the claims. *See Innovention* Pet. at 10-18.

A recognition that willfulness is a factual issue does not diminish the district court's responsibility to decide whether (and to what extent) to enhance damages under § 284. As Judge O'Malley observed: "The mere presence of factual components in a discretionary inquiry does not remove that inquiry from the court to whom congress reposed it." *Halo Electronics, Inc. v. Pulse Electronics, Inc.* ("*Halo 2014*"), 769 F.3d 1371, 1386 (Fed. Cir. 2014) (O'Malley, J., concurring). Thus, enhancement is a separate question within the district court's discretion after a willfulness decision.

III. THE STANDARD OF PROOF FOR WILLFULNESS SHOULD BE A PREPONDERANCE OF THE EVIDENCE.

Amicus Innovention respectfully submits that the standard of proof for willfulness should be a preponderance of the evidence, not clear and convincing evidence. In rejecting that standard in *Octane Fitness*, the Court observed:

> [N]othing in § 285 justifies such a high standard of proof. Section 285 demands a simple discretionary inquiry; it imposes no specific evidentiary burden, much less such a high one. Indeed, patent-infringement litigation has always been governed by a preponderance of the evidence standard, and that is the "standard generally applicable in civil actions," because it "allows both parties to 'share the risk of error in roughly equal fashion.'"

134 S. Ct. 1749, 1758 (2014) (citations omitted) (citing *Herman & MacLean v. Huddleston*, 459 U.S. 375, 390 (1983)). As with § 285, nothing in § 284 requires proof of willfulness by clear and convincing evidence. Judge O'Malley noted that courts in copyright and trademark cases only require proof of willfulness by a preponderance of the evidence. *Halo 2014*, 769 F.3d 1371, 1385 (Fed. Cir. 2014) (O'Malley, J., concurring) ("[Section] 284 has no language that would justify a higher standard of proof."). Without any statutory or other justification for a higher standard of proof, *amicus* respectfully submits that the Court should clarify that willfulness should be proven by a preponderance of the evidence.

IV. SECTION 284 GIVES "*THE COURT*" DISCRETION TO ENHANCE DAMAGES; A DISTRICT COURT'S ENHANCEMENT OF DAMAGES SHOULD BE REVIEWED FOR AN ABUSE OF DISCRETION.

A district court's decision on whether (and how much) to enhance damages should be reviewed for an abuse of discretion—not *de novo*. The statute itself

states that "*the court may* increase the damages up to three times the amount found." 35 U.S.C. § 284 (emphasis added). *Highmark* held that very similar language in Section 285—"*[t]he court* in exceptional cases *may* award reasonable attorney fees"—required review for abuse of discretion, holding that the district court "'is better positioned' to decide whether case is exceptional, because it lives with the case over a prolonged period of time." 134 S. Ct. 1744, 1748-49 (2014) (emphasis added) (citing *Pierce v. Underwood*, 487 U.S. 552, 559 (1988), which held that under the applicable statute there, "attorney's fees shall be awarded 'unless *the court finds* that the position of the United States was substantially justified"). As in *Highmark* and *Pierce*, the district court "is better positioned" to decide enhanced damages "because it lives with the case over a prolonged period of time."

In light of *Highmark*, two judges on the Federal Circuit suggested that enhanced fees under § 284 should also be reviewed for an abuse of discretion. *Halo 2014*, 769 F.3d at 1385-86 (O'Malley, J., concurring, joined by Hughes, J.) ("[W]e must also consider whether a district court's finding of willfulness should be subject to de novo review.").

Review of fee enhancements for an abuse of discretion is also consistent with earlier cases that interpreted Section § 284. *See, e.g., SRI Int'l, Inc. v. Advanced Tech. Lab., Inc.*, 127 F.3d 1462, 1468-69 (Fed. Cir. 1997); *Nat'l Presto Indus. Inc. v. West Bend Co.*, 76 F.3d 1185, 1193-94, (Fed. Cir. 1996); *Amsted Indus., Inc. v. Buckeye Steel Castings Co.*, 24 F.3d 178, 183 (Fed. Cir. 1994). *Amicus* respectfully submits that the Court should correct the standard of review used by the Federal Circuit for enhancement under

§ 284, which is currently *de novo*. Instead, the Court should mandate an abuse of discretion standard.

V. ENHANCEMENT OF DAMAGES UNDER SECTION 284 SHOULD NOT REQUIRE A FINDING OF WILLFULNESS.

Finally, a district court's discretion to enhance damages under § 284 should not be limited to instances of willful infringement. Not only does § 284 give the district court discretion to enhance, nothing in the statute restricts enhancement to cases of willful infringement: "In either event the court may increase the damages up to three times the amount found or assessed." 35 U.S.C. § 284.

As Judges Gajarsa and Newman observed in *Seagate*, both the Copyright Act and the FCRA (analyzed by the Supreme Court in *Safeco*) include the word "willfully," while Section 284 does not. *In re Seagate Tech., LLC*, 497 F.3d 1360,1381-82 (Fed. Cir. 2007). Moreover, pre-*Seagate* cases held that the district court could enhance damages based on willfulness or "bad faith." *See, e.g., Aro Mfg. Co. v. Convertible Top Replacement Co.*, 377 U.S. 476, 508 (1964) ("in a case of willful or *bad-faith* infringement," plaintiff could recover increased damages under § 284 (emphasis added)); *SRI Int'l v. Advanced Tech. Labs.*, 127 F.3d 1462, 1468-69 (same). Thus, at a minimum, enhanced damages under § 284 should also be available for "bad faith" infringement, even if not willful.

Conclusion

For the forgoing reasons, *amicus* Innovention Toys, LLC, respectfully asks the Court to use the

Halo and *Stryker* cases as a vehicle to correct the Federal Circuit's standards for the determination and review of willful patent infringement and enhanced damages under 35 U.S.C. § 284. In particular, Innovention urges the Court to hold that: (1) willfulness is to be determined based on a totality of the circumstances, not the two-prong *Seagate* test; (2) willfulness is a factual issue to be reviewed for substantial evidence/clear error; (3) the standard of proof for willfulness is preponderance of the evidence, not clear and convincing evidence; (4) a district court's enhancement decision is to be reviewed for an abuse of discretion, not *de novo*; and (5) enhanced damages do not require a finding of willful infringement.

Respectfully Submitted,

/s/ James C. Otteson
JAMES C. OTTESON
Counsel of Record
DAVID A. CAINE
THOMAS T. CARMACK
ARNOLD & PORTER, LLP
Suite 110
1801 Page Mill Road
Palo Alto, CA 94304-1216
Telephone: (650) 798-2920
james.otteson@aporter.com

Counsel for Amicus Curiae

December 16, 2015

Nos. 14-1513 & 14-1520

In the Supreme Court of the United States

HALO ELECTRONICS, INC., PETITIONER

v.

PULSE ELECTRONICS, INC., ET AL.

STRYKER CORPORATION, ET AL., PETITIONERS

v.

ZIMMER, INC., ET AL.

ON WRITS OF CERTIORARI
TO THE UNITED STATES COURT OF APPEALS
FOR THE FEDERAL CIRCUIT

BRIEF FOR INTEL CORP., HEWLETT PACKARD ENTERPRISE CO., AND MEDTRONIC PLC AS AMICI CURIAE SUPPORTING RESPONDENTS

KANNON K. SHANMUGAM
Counsel of Record
DAVID M. KRINSKY
ALLISON B. JONES
WILLIAMS & CONNOLLY LLP
725 Twelfth Street, N.W.
Washington, DC 20005
(202) 434-5000
kshanmugam@wc.com

TABLE OF CONTENTS

Page

Interest of amici curiae 1

Summary of argument 3

Argument 6

I. The *Seagate* standard for enhanced damages functions well and has been implicitly endorsed by Congress 6

A. The *Seagate* standard has worked well in the vast majority of cases, including the most common cases technology companies face 6

B. The *Seagate* standard is consistent with Congress's intent to shield objectively reasonable conduct from assertions of willfulness 9

II. A more 'flexible' standard under Section 284 would reopen the problems that existed before *Seagate*, expand costly litigation, and undermine innovation 13

A. The Federal Circuit adopted the *Seagate* standard because the preexisting totality-of-the-circumstances standard was unworkable 14

B. Returning to a totality-of-the-circumstances standard would harm innovation and expand costly litigation 18

III. Petitioners' concerns about copying do not warrant a more 'flexible' standard but can instead be addressed by slightly modifying the *Seagate* standard 21

A. Petitioners' concerns about copying are overstated 22

B. A slight modification to the *Seagate* standard can adequately address any remaining concerns about copying 25

C. The modified *Seagate* standard is consistent with case law confirming that Section 284 is a punitive statute that requires proof of objectively reckless conduct 26

Page

Table of contents—continued:

1. Section 284 is a punitive statute 26
2. Section 284 requires willful conduct 27
3. The modified *Seagate* standard is consistent with the standards applied under other punitive federal statutes 28

Conclusion 32

TABLE OF AUTHORITIES

Cases:

Advanced Display Systems, Inc. v. *Kent State University*, 212 F.3d 1272 (Fed. Cir. 2000) 24
Aro Manufacturing Co. v. *Convertible Top Replacement Co.*, 377 U.S. 476 (1964) 27
Baseball Display Co. v. *Star Ballplayer Co.*, 35 F.2d 1 (3d Cir. 1929) 28
Beatrice Foods Co. v. *New England Printing & Lithographing Co.*, 923 F.2d 1576 (Fed. Cir. 1991) 27
Circuit Check Inc. v. *QXQ Inc.*, 795 F.3d 1331 (Fed. Cir. 2015) 24
Commil USA, LLC v. *Cisco Systems, Inc.*, 135 S. Ct. 1920 (2015) 7, 20
Dowling v. *United States*, 473 U.S. 207 (1985) 27
Echostar Communications Corp. In re, 448 F.3d 1294 (Fed. Cir. 2006) 15
Exxon Shipping Co. v. *Baker*, 554 U.S. 471 (2008) 26, 28, 29, 31
Gertz v. *Robert Welch, Inc.*, 418 U.S. 323 (1974) 28, 29
Halo Electronics, Inc. v. *Pulse Electronics, Inc.*, Civ. No. 07-331, 2013 WL 2319145 (D. Nev. May 28, 2013) 25
Highmark, Inc. v. *Allcare Health Management System, Inc.*, 701 F.3d 1351 (Fed. Cir. 2012) 27

Page

Cases—continued:

Kloster Speedsteel AB v. *Crucible, Inc.*, 793 F.2d 1565 (Fed. Cir. 1986) 14
Knorr-Bremse Systeme Fuer Nutzfahrzeuge GmbH v. *Dana Corp.*, 383 F.3d 1337 (Fed. Cir. 2004) 4, 15
Kolstad v. *American Dental Association*, 527 U.S. 526 (1999) 28, 29, 30, 31
Mathis v. *Spears*, 857 F.2d 749 (Fed. Cir. 1988) 27
Octane Fitness, LLC v. *ICON Health & Fitness, Inc.*, 134 S. Ct. 1749 (2014) 18, 19, 26, 28
Power Specialty Co. v. *Connecticut Light & Power Co.*, 80 F.2d 874 (2d Cir. 1936) 27
Root v. *Railway Co.*, 105 U.S. 189 (1881) 26
Safeco Insurance Co. of America v. *Burr*, 551 U.S. 47 (2007) 27, 29
Seagate Technology, LLC, In re, 497 F.3d 1360 (Fed. Cir. 2007) ..... *passim*
Seymour v. *McCormick*, 57 U.S. 480 (1853) 26, 27
Smith v. *Wade*, 461 U.S. 30 (1983) 28, 29
Stryker Corp. v. *Zimmer, Inc.*, Civ. No. 10-1223, 2013 WL 6231533 (W.D. Mich. Aug. 7, 2013) 24
Underwater Devices, Inc. v. *Morrison-Knudsen Co.*, 717 F.2d 1380 (Fed. Cir. 1983) 14
Union Carbide Corp. v. *Graver Tank & Manufacturing Co.*, 282 F.2d 653 (7th Cir. 1960) 27
W.S. Godwin Co. v. *International Steel Tie Co.*, 29 F.2d 476 (6th Cir. 1928) 28
Wilden Pump & Engineering Co. v. *Pressed & Welded Products Co.*, 655 F.2d 984 (9th Cir. 1981) 27

Statutes and rule:

Leahy-Smith America Invents Act, Pub. L. No. 112-29, 125 Stat. 284 (2011) 4, 9, 10, 13
35 U.S.C. 284 ..... *passim*
35 U.S.C. 285 ..... 18, 19, 26, 28

Page

Statutes and rule—continued:

35 U.S.C. 298 ..... 4, 9, 10, 12
42 U.S.C. 1981a(b)(1) 28
S. Ct. R. 37.6 1

Miscellaneous:

Bloomberg Law, *Debate on Patent Reform Legislation Continues in Congress* (Aug. 12, 2015) <tinyurl.com/bloombergdebate> 18
157 Cong. Rec. 3427 (2011) 10, 12
Christopher A. Cotropia & Mark A. Lemley, *Copying in Patent Law*, 87 N.C. L. Rev. 1421 (2009) 18, 22, 23
Ryan Davis, IP Law 360, *Top IP Verdicts of 2014—And the Firms that Won Them* <tinyurl.com/topipverdicts> 23
Federal Trade Commission, *The Evolving IP Marketplace: Aligning Patent Notice and Remedies with Competition* (Mar. 2011) <tinyurl.com/ftcremediesreport> 19, 20
Federal Trade Commission, *To Promote Innovation: The Proper Balance of Competition and Patent Law and Policy* (Oct. 2003) <tinyurl.com/ftcinnovationreport> 16, 19
H. Rep. No. 98, 112th Cong., 1st Sess. (2011) 11, 12
W. Page Keeton et al., *Prosser & Keeton on Law of Torts* (5th ed. 1984) 27
Jim Kerstetter, CNet, *How Much is that Patent Lawsuit Going to Cost You?* <tinyurl.com/patentcosts> 24
William F. Lee & A. Douglas Melamed, *Breaking the Vicious Cycle of Patent Damages*, 101 Cornell L. Rev. (forthcoming 2016) <tinyurl.com/leemelamed> 7

Page

Miscellaneous—continued:

William F. Lee et al., *The Doctrine of Willful Patent Infringement after* Knorr-Bremse: *Practical Problems & Recommendations*, 7 Sedona Conf. J. 169 (2006) 15

Mark A. Lemley & Carl Shapiro, *Patent Holdup and Royalty Stacking*, 85 Tex. L. Rev. 1991 (2007) 6

Brian J. Love, *The Misuse of Reasonable Royalty Damages as a Patent Infringement Deterrent*, 74 Mo. L. Rev. 909 (2009) 9

Kimberly A. Moore, *Empirical Statistics on Willful Patent Infringement*, 14 Fed. Cir. B.J. 227 (2004) 18

Christopher B. Seaman, *Willful Patent Infringement and Enhanced Damages After* In Re Seagate: *An Empirical Study*, 97 Iowa L. Rev. 417 (2012) 18, 21, 23

S. Rep. No. 18, 111th Cong., 1st Sess. (2009) 12

In the Supreme Court of the United States

Nos. 14-1513 & 14-1520

HALO ELECTRONICS, INC., PETITIONER

v.

PULSE ELECTRONICS, INC., ET AL.

STRYKER CORPORATION, ET AL., PETITIONERS

v.

ZIMMER, INC., ET AL.

ON WRITS OF CERTIORARI
TO THE UNITED STATES COURT OF APPEALS
FOR THE FEDERAL CIRCUIT

BRIEF FOR INTEL CORP., HEWLETT PACKARD ENTERPRISE CO., AND MEDTRONIC PLC AS AMICI CURIAE SUPPORTING RESPONDENTS

INTEREST OF AMICI CURIAE

Amicus Intel Corp. is a world leader in designing and manufacturing computer, communication, and other electronic components.* With more than 20,000 patents,

* Pursuant to Rule 37.6, amici curiae affirm that no counsel for a party authored this brief in whole or in part and that no person other than amici or their counsel has made any monetary contributions

it has one of the Nation's largest patent portfolios and is among the top recipients of patents each year. As such, it is a strong supporter of the patent system. At the same time, Intel is also a frequent target of patent-infringement lawsuits, many of which involve patent claims of highly questionable merit. Intel therefore intimately understands the practical need to balance vigorous protection of legitimate patents with suitably high standards for awarding litigation incentives such as enhanced damages.

Amicus Hewlett Packard Enterprise Co. (HPE), one of the successor entities to the Hewlett-Packard Company, is a leading global provider of the cutting-edge technology solutions customers need to optimize their traditional information technology. HPE has an industry-leading position in servers, storage, networking, converged systems, software and services, and customized financing solutions. As such, HPE is an innovator company with an acute interest in a strong patent system and is directly affected by the high costs of patent litigation.

Amicus Medtronic PLC is the world's largest medical technology company. With over 46,000 employees, Medtronic has transformed health care worldwide, improving outcomes, expanding access, and enhancing value. Medtronic is a leading innovator in the field and capitalizes on the intellectual property it generates. Medtronic files hundreds of original patent applications annually in the United States.

---

intended to fund the preparation or submission of this brief. The parties have consented to the filing of this brief, and copies of their letters of consent are on file with the Clerk's Office.

The Court's decision in these cases regarding the appropriate standard for enhancement of damages under 35 U.S.C. 284 will have significant ramifications for amici and for their industries more generally. Amici have briefed this issue previously, including in *In re Seagate Technology, LLC*, 497 F.3d 1360 (Fed. Cir. 2007), the case in which the Federal Circuit articulated the standard that is at issue here. As leaders in American technology before, during, and after *Seagate*, amici submit this brief to provide their perspective on the primary question before this Court.

SUMMARY OF ARGUMENT

Amici and other major technology companies would be adversely affected by a broad, totality-of-the-circumstances inquiry for enhanced damages under 35 U.S.C. 284. By adopting an objective recklessness inquiry for assessment of enhanced damages in *In re Seagate Technology, LLC*, 497 F.3d 1360 (Fed. Cir. 2007), the Federal Circuit brought its jurisprudence in line with over a century of precedent that makes clear that enhanced damages are reserved for cases involving willful misconduct. In the vast majority of cases, that standard appropriately balances the need to punish bad-faith infringers against the high potential costs of routine inquiry into facts about defendants' states of mind and privileged legal advice.

That is particularly true in the most common scenario faced by technology companies such as amici, in which a patentee sends a demand letter alleging infringement of a relatively old patent; the company investigates the allegations; and, if the company concludes the allegations lack merit, the patentee sues and alleges willfulness for failing to stop infringement upon receipt of the letter. Under *Seagate*, if a company asserts a reasonable de-

fense to infringement in that situation, the willfulness allegations are rightly eliminated at summary judgment, before the case proceeds to trial.

Congress implicitly condoned the *Seagate* standard when it passed the Leahy-Smith America Invents Act, Pub. L. No. 112-29, 125 Stat. 284 (2011) (AIA). In the AIA, Congress referred to the *Seagate* standard with approval; declared that the *Seagate* standard would remain unchanged; and declined to alter the statutory text of Section 284. At the same time, Congress enacted 35 U.S.C. 298, which provides that the failure to obtain an opinion of counsel before undertaking allegedly infringing conduct is *not* probative of willfulness. Section 298 confirms a patentee bears the burden to prove willfulness by the accused infringer and that mere failure to obtain an opinion of counsel is insufficient to make that showing.

Before *Seagate*, a totality-of-the-circumstances standard similar to that advocated by petitioners governed the availability of enhanced damages and resulted in significant problems in the technology industry. At that time, particularly before the Federal Circuit's decision in *Knorr-Bremse Systeme Fuer Nutzfahrzeuge GmbH* v. *Dana Corp.*, 383 F.3d 1337 (2004), accused infringers had a "duty of care" that effectively required them to demonstrate their "subjective good faith" by showing that they had obtained opinions of counsel before engaging in infringing conduct. Those opinions were meant to justify an accused infringer's conduct by showing that the patent at issue was invalid or not infringed. But they were costly, lacked probative value, and created thorny problems concerning the attorney-client privilege. By imposing an objective standard, *Seagate* all but eliminated the need for those opinions, addressing the concerns of the

technology industry while at the same time reducing the chilling effects of treble damages on innovation.

Returning to a totality-of-the-circumstances standard would also cause additional harms to the technology industry. The frequency of enhanced damage awards would inevitably increase; "demand letters" and litigation from patentees generally (including non-practicing entities) would also increase; and companies, fearful of the prospect of treble damages, would be forced to divert their research and development funds toward litigation and licensing costs.

While amici share petitioners' concerns that an appropriate standard for willfulness should deter "copying" activities, those concerns are overblown. The existing framework allows patentees to use evidence of copying to uphold the validity of their patents and receive compensatory damages for infringement. And the *Seagate* standard punishes any copying that infringers perform despite an "objectively high likelihood" that the patent was valid and infringed. Cases in which an accused infringer engages in particularly egregious, bad-faith copying with the intent to infringe a patent are exceptionally rare and do not justify a wholesale revision of the existing *Seagate* standard. The benefits of deterring additional copying are low when weighed against the harms associated with a broad, totality-of-the-circumstances standard.

Accordingly, amici support a willfulness framework that maintains *Seagate*'s objective standard but also affords patentees the opportunity to prove, in rare cases involving deliberate copying, that an accused infringer *affirmatively believed* that it was infringing the relevant patent. That framework would address petitioners' "copying" concern in the rare and extreme cases in which it arises, while maintaining, in the mine run of cas-

es, the objective standard necessary to prevent a return to the problematic pre-*Seagate* totality-of-the-circumstances approach. That framework would also be consistent with existing doctrine on both willfulness and punitive damages. This Court should adopt the framework proposed here and affirm the judgments below.

ARGUMENT

I. THE *SEAGATE* STANDARD FOR ENHANCED DAMAGES FUNCTIONS WELL AND HAS BEEN IMPLICITLY ENDORSED BY CONGRESS

Respondents have explained how the standard for enhanced damages under Section 284 articulated by the Federal Circuit in *Seagate* is consistent with the text and history of the statute, as well as with a long line of precedent from both this Court and the courts of appeals. See Pulse Br. 12-39; Zimmer Br. 11-45. Equally importantly, the *Seagate* standard works as a practical matter. In the mine run of cases, including the most common fact pattern faced by technology companies such as amici, the *Seagate* standard appropriately restricts enhanced damages to those cases in which an award of punitive damages is appropriate. And Congress has implicitly approved both the willfulness requirement of Section 284 and the *Seagate* standard for applying it. There is therefore no valid basis for discarding that standard.

A. The *Seagate* Standard Has Worked Well In the Vast Majority Of Cases, Including The Most Common Cases Technology Companies Face

A typical technological product may be alleged to infringe a vast number of different patents. A microprocessor, for example, may use thousands of different patented inventions. See Mark A. Lemley & Carl Shapiro, *Patent Holdup and Royalty Stacking*, 85 Tex. L. Rev.

1991, 2009 (2007). As a result, companies "cannot realistically * * * identify and evaluate all the possibly relevant patents * * * before starting to develop a new product." William F. Lee & A. Douglas Melamed, *Breaking the Vicious Cycle of Patent Damages*, 101 Cornell L. Rev. (forthcoming 2016) (manuscript at 19) <tinyurl.com/leemelamed>. Even if a company could identify a set of potentially relevant patents, uncertainty about the articulated claims means that "it would still be an expensive and uncertain undertaking to determine which ones genuinely cover a particular product." *Id.* (manuscript at 19-20). And the delay entailed in attempting such an undertaking would hinder the company's ability to bring a technology product to market in "anything close to a commercially reasonable time." *Id.* (manuscript at 21).

Unsurprisingly, therefore, it is all too routine for technology companies to receive "demand letters" from patentees seeking licensing fees. See *Commil USA, LLC* v. *Cisco Systems, Inc.*, 135 S. Ct. 1920, 1930 (2015); Adobe Systems Br. at 23, *Seagate*, *supra*. In response, technology companies typically conduct an investigation into the potential claims. But if a technology company concludes that the infringement allegations lack merit and declines the licensing offer, the patentee may then sue the company and accuse it of willful infringement for failing to stop infringing upon receipt of the demand letter.

In this scenario—a typical scenario in the experience of companies such as amici—the *Seagate* standard works well. Unlike the status quo before *Seagate* or the totality-of-the-circumstances test proposed by petitioners, the *Seagate* approach balances the need to punish bad-faith infringers with the high potential costs of routine inquiry into defendants' states of mind and privileged legal ad-

vice. In particular, under *Seagate*, the defenses to a charge of willfulness are often amenable to summary judgment. The reasonableness of the defense can be evaluated as a question of law without the need for fact-dependent inquiries into the defendant's state of mind; the chronology of what it knew when about the patent; or (in the event of an often-difficult decision to waive the privilege) the advice it received from its lawyers.

Rather, if the company asserts a reasonable defense to infringement, the willfulness allegations are appropriately eliminated before the case proceeds to trial. And if the company lacks a reasonable defense, its decision to proceed with infringement in the absence of such a defense can be punished by Section 284. Either way, an early resolution of the willfulness question helps the parties more accurately to value the case and properly focuses the litigation on the merits of the dispute and on the appropriate compensation for any infringement.

The *Seagate* standard also addresses the messy reality that neither the infringement allegations nor even the specific patent claims being asserted may be clear to the accused infringer at the time of the initial demand letter. Petitioners and the government urge the Court to revert to a pre-*Seagate* standard that focuses on *when* an infringer developed its reasonable defense to an allegation of infringement. See U.S. Br. 29; Stryker Br. 49. But holding infringers to such a standard would frequently be unreasonable. Patentees often continue to prosecute patents even after issuing a demand letter, either because the demand precedes final issuance of the patent or because the patentee has filed a continuation application. Indeed, a patentee can file an application with a broad disclosure; wait until a competitor introduces a successful product; and then file a continuation application and prosecute new claims targeting that product.

See Brian J. Love, *The Misuse of Reasonable Royalty Damages as a Patent Infringement Deterrent*, 74 Mo. L. Rev. 909, 933 (2009). Even if all relevant patents have already issued, moreover, the specific infringement theories to which an accused infringer may be asked to respond may not be clear until well into the litigation, when the patentee issues infringement contentions or responds to contention interrogatories.

For those reasons, the *Seagate* standard is well suited to the complex realities of modern technologies and the patent litigation that surrounds them. Under the *Seagate* standard, willfulness allegations can be evaluated efficiently at the summary-judgment stage based on the reasonableness of the infringer's defenses, without the need for a complicated and expensive inquiry into the infringer's state of mind or the timing of its subjective knowledge.

B. The *Seagate* Standard Is Consistent With Congress's Intent To Shield Objectively Reasonable Conduct From Assertions Of Willfulness

In enacting the America Invents Act in 2011, Congress demonstrated that it was satisfied with the *Seagate* standard for enhanced damages in at least two important ways. *First*, Congress enacted Section 298, which expressly states that the failure of an infringer to obtain or present evidence of a legal opinion concerning an allegedly infringed patent may not be used to prove willfulness. *Second*, Congress left Section 284 unchanged.

1. Section 298 of the Patent Code states that "[t]he failure of an infringer to obtain the advice of counsel with respect to any allegedly infringed patent, or the failure of the infringer to present such advice to the court or jury, may not be used to prove that the accused infringer willfully infringed the patent." 35 U.S.C. 298. Two criti-

cal components of Section 298 bear on Congress's understanding of Section 284.

First, Section 298 expressly refers to proving "willful[] infringe[ment]." No other provision of the Patent Code refers directly to willful infringement; in light of the settled understanding that Section 284 is directed toward "willful infringement," see pp. 27-28, *infra*, Section 284 is the only possible provision to which the reference to "willful infringement" in Section 298 could possibly pertain. Were it otherwise, the reference to "willful infringement" would serve no purpose. Section 298 thus confirms that Congress understood, and intended to reaffirm, that Section 284 requires willfulness for enhanced damages.

Second, Section 298 demonstrates Congress's preference for an objective standard in determining willfulness in an ordinary case. Under Section 298, a patentee cannot prove willful infringement based on the failure of an accused infringer to "obtain" advice of counsel or to "present" validity or non-infringement opinions of such counsel. 35 U.S.C. 298. In adopting that rule, Congress made clear that advice of counsel—which had long been used as evidence of an infringer's subjective good or bad faith before *Seagate*—should not be a necessary component of the willfulness inquiry.

In the debates on the AIA, members of Congress noted that an accused infringer's efforts to obtain such opinions, and the opinions themselves, lacked probative value. One of the AIA's sponsors stated on the Senate floor that Section 298 reflected "legislative skepticism of such opinions" when they were produced by accused infringers. 157 Cong. Rec. 3427 (2011) (statement of Sen. Kyl). Given that the "probative value of this type of evidence is outweighed by the harm that coercing a waiver of attorney-client privilege inflicts on the attorney-client

relationship," Congress made the "policy choice" to discount such evidence and to "reduce pressure on accused infringers to obtain opinions of counsel for litigation purposes." H. Rep. No. 98, 112th Cong., 1st Sess. 53 (2011).

2. In addition, Congress's express prohibition on punishing accused infringers for their failure to obtain an opinion of counsel fatally undermines the contentions of petitioners and the government that infringement may be considered willful if the accused infringer does not know of an objectively reasonable defense "at the time of the infringing conduct." U.S. Br. 29 (emphasis omitted); see Stryker Br. 49. That approach would punish an accused infringer that sought legal advice and developed an objectively reasonable but ultimately unavailing defense during litigation. But it would insulate an accused infringer that secures exactly the same legal advice and becomes aware of exactly the same legal defense at the time of the alleged infringement.

In *Seagate*, the Federal Circuit eliminated the affirmative duty of due care, thereby removing any doubt as to whether an accused infringer needed to procure exculpatory opinions before suit in order to avoid a finding of willfulness. See pp. 16-17, *infra*. But if the availability of enhanced damages turns on *when* an infringer develops an objectively reasonable defense, not merely on whether that defense is indeed objectively reasonable, accused infringers will routinely be forced to commission opinion letters, waive the attorney-client privilege, and produce those letters. That is because, as a practical matter, accused infringers would only be certain to have become aware of objectively reasonable defenses by procuring an opinion of counsel; developing a reasonable invalidity or non-infringement position typically requires legal analysis, especially because the proper construction of a patent claim is ultimately a question of law. If the

willfulness inquiry hinged on whether the accused infringer possessed an objectively reasonable defense "at the time of the infringement," as petitioners and the government contend, the infringer's opinion of counsel or its absence would be at issue in virtually every case, and accused infringers that did not procure or disclose an opinion would be disadvantaged. That is precisely what Section 298 forbids.

By contrast, the objective prong of the *Seagate* standard looks to *whether* an accused infringer's defenses were sufficiently reasonable, rather than *when* they were formulated. The reasonableness of the infringer's conduct is still evaluated, and infringers that recklessly infringe in the absence of an "objectively reasonable position," as Stryker puts it, are rightly punished. But consistent with Section 298, the inquiry should focus on the objective reasonableness of the defendant's position—not on whether it was opinion counsel contemporaneous with the conduct, rather than trial counsel sometime later, who first articulated that position.

3. At the same time it enacted Section 298, Congress left Section 284 undisturbed. That decision confirms that Congress intended to preserve the existing *Seagate* standard for willfulness in typical cases. Congress was well aware of *Seagate* when it debated and negotiated the AIA. See, *e.g.*, H. Rep. No. 98, *supra*, at 39 & n.9 (noting that *Seagate* was "respons[ive]" to "concerns" of the Supreme Court and others). And in considering patent-reform bills prior to the AIA, Congress expressed its support for *Seagate*, noting that it "view[ed] this decision as a positive development." S. Rep. No. 18, 111th Cong., 1st Sess. 12 (2009). Thus, it is unsurprising that the bill that became the AIA did not disturb substantive damages law and, in particular, "ma[de] no changes to the standard for awards of treble damages." 157 Cong.

Rec. 3427 (2011) (statement of Sen. Kyl). That approach makes sense, given that Congress generally sought to "create[] an environment where the most economically reasonable option for a party confronted with a *strong patent* is to take a license." *Ibid.* (emphasis added). Congress was not primarily concerned with deterring the infringement of weak patents.

If Congress had desired a wholesale revision of the *Seagate* standard, much less a return to a more expansive totality-of-the-circumstances standard, it certainly could have made such a change to Section 284 when it passed the AIA. But instead, Congress chose to retain, and even reinforce, the existing *Seagate* standard. There is no valid evidence that Congress intended to disturb the objective standard for willfulness at the heart of the Federal Circuit's decision in *Seagate*.

II. A MORE 'FLEXIBLE' STANDARD UNDER SECTION 284 WOULD REOPEN THE PROBLEMS THAT EXISTED BEFORE *SEAGATE*, EXPAND COSTLY LITIGATION, AND UNDERMINE INNOVATION

Petitioners propose a flexible, "totality of the circumstances" standard for awarding enhanced damages under Section 284, much like the standard that governed willfulness in the Federal Circuit before that court's decision in *Seagate*. See Halo Br. 10, 25, 27; Stryker Br. 14. But such a flexible and ambiguous standard for treble damages would lead to a string of problems. Indeed, the Federal Circuit adopted the bright-line standard of *Seagate* precisely because of problems associated with the prior totality-of the-circumstances-approach. From their perspective both as plaintiffs and as defendants in patent-infringement cases, amici urge the Court not to send litigants back down that harmful path.

A. The Federal Circuit Adopted The *Seagate* Standard Because The Preexisting Totality-Of-The-Circumstances Standard Was Unworkable

1. The *Seagate* standard arose out of a context in which a more flexible standard for imposing enhanced damages under Section 284 had become untenable. As the government acknowledges in its amicus brief here, *Seagate* was "motivated in large part by a justifiable concern" that district courts (and therefore juries) had been given too much discretion to impose enhanced damages. U.S. Br. 22.

In fact, the standard for enhanced damages that preceded *Seagate* in the Federal Circuit was broadly the standard that petitioners are advancing here: *i.e.*, a standard assessing willfulness "in the totality of the circumstances presented in th[e] case." *Underwater Devices, Inc.* v. *Morrison-Knudsen Co.*, 717 F.2d 1380, 1390 (Fed. Cir. 1983). As applied by the Federal Circuit, that standard required accused infringers to "seek and obtain competent legal advice from counsel *before* the initiation of any possible infringing activity," in order to demonstrate their subjective good faith. *Ibid.* An opinion of counsel was considered crucial to the willfulness analysis. *Ibid.* And an adverse inference was applied against an infringer that failed to obtain an opinion: namely, an inference that the infringer "either obtained no advice from counsel[,] or did so and was advised that its [activities] would be an infringement of valid U.S. patents." *Kloster Speedsteel AB* v. *Crucible, Inc.*, 793 F.2d 1565, 1580 (Fed. Cir. 1986).

Efforts to obtain legal opinions before suit not only were expensive for companies such as amici, but also created extensive issues concerning the waiver of the attorney-client privilege when they were disclosed during litigation. An accused infringer was frequently forced to

make a Hobson's choice either to disclose an attorney opinion supporting the infringer's subjective good faith (and thereby waive the privilege) or to receive an adverse inference on the willfulness question.

Eventually, the Federal Circuit eliminated the adverse inference associated with an accused infringer's failure to obtain opinions of counsel, but the court declined to disturb the broader principle that, under the totality-of-the-circumstances standard, the infringer bore an affirmative duty of due care. See *Knorr-Bremse*, 383 F.3d at 1344-1346. Thus, even after *Knorr-Bremse*, it was understood that "an opinion of counsel w[ould] often remain the only realistic way for a defendant to meet its affirmative duty," with the result that "many of the pre-*Knorr-Bremse* problems * * * persist[ed]." William F. Lee et al., *The Doctrine of Willful Patent Infringement after* Knorr-Bremse: *Practical Problems & Recommendations*, 7 Sedona Conf. J. 169, 177 (2006). At least one judge expressed concern that, even without the adverse inference, the totality-of-the-circumstances standard would lead to the "imposition of substantial legal costs on companies seeking to introduce innovative products" and an "enhanced ability of holders of dubious patents to force competitors' products off of the market through the threat of enhanced damages." *Knorr-Bremse*, 383 F.3d at 1341 (Dyk, J., concurring in part and dissenting in part). Around the same time, the Federal Circuit exacerbated the problem with the waiver of the attorney-client privilege by extending the waiver to "any attorney-client communications relating to the same subject matter," regardless of whether it involved the counsel that prepared the opinion. *In re Echostar Communications Corp.*, 448 F.3d 1294, 1299 (2006).

Thus, in the lead-up to *Seagate*, the Hobson's choice remained, and technology companies and other frequent

targets of litigation were forced to shoulder substantial expenses in ordinary cases while simultaneously grappling with the possibility that they would have to waive the privilege over broad swaths of attorney-client communications.

2. The burdens associated with the totality-of-the circumstances standard were troubling to the technology community at large. More than twenty amicus briefs were filed before the Federal Circuit in *Seagate*, and many of them lamented the aforementioned problems with that standard. As Intel explained in a brief filed with several other technology companies, the existing standard "compel[led] companies, including *Amici*, to expend substantial resources—*e.g.*, to obtain legal opinions for the sole purpose of defending against charges of willful infringement—much of which could be used instead to foster innovation." Adobe Systems Br. at 6, *Seagate*, *supra*. In the words of the FTC, the pre-*Seagate* "willfulness doctrine drew few defenders." Federal Trade Commission, *To Promote Innovation: The Proper Balance of Competition and Patent Law and Policy*, ch. 5, at 29 (Oct. 2003) <tinyurl.com/ftcinnovationreport> (FTC Study). Given those problems, multiple amici urged that a failure to obtain opinions of counsel should not be admissible to prove willfulness, lest "[p]atentees effectively re-impose the [adverse inference] through attorney argument that the totality of circumstances warrants a finding of willfulness." Echostar Communications Br. at 9, *Seagate*, *supra*.

In *Seagate*, the Federal Circuit recognized that its prior standard was a failed experiment, and it addressed the widespread concerns with that standard by adopting its objective standard for willfulness under Section 284. The court eliminated the accused infringer's affirmative duty of due care and held that "there is no affirmative

obligation to obtain opinion of counsel" to defend against willfulness allegations. 497 F.3d at 1371. Among other things, the court recognized that the attorney opinions were of minimal probative value, and highlighted the privilege and work-product issues that plagued their use in litigation. *Id.* at 1369-1370.

3. Adopting the totality-of-the-circumstances standard advanced by petitioners here would return infringement litigation to the pre-*Seagate* era of a subjective standard for enhanced damages and would reopen the Pandora's box of problems that existed under the Federal Circuit's prior rule.

As discussed above, petitioners and the government argue for a totality-of-the-circumstances standard that focuses on *when* an accused infringer developed its reasonable defense to an allegation of infringement. See U.S. Br. 29; Stryker Br. 49. But neither petitioners nor the government explain how reasonableness at the time of the disputed conduct would be proven. And just as the affirmative duty of due care had effectively required an infringer to demonstrate that it had procured an exculpatory, pre-infringement opinion of counsel, a standard focusing on whether the infringer adopted a reasonable position based on the facts and circumstances known at the time of the infringing conduct would once again effectively require opinions of counsel before suit. The only practical way for an infringer to show that it had adopted an objectively reasonable position before litigation would be to provide evidence that it obtained such an opinion. Petitioners' approach would thus trigger the same problems that animated the Federal Circuit's adoption of the *Seagate* standard in the first place.

B. Returning To A Totality-Of-The-Circumstances Standard Would Harm Innovation And Expand Costly Litigation

1. Returning to a totality-of-the-circumstances approach such as that advanced by petitioners would have serious effects on innovation in the technology industry. The frequency of enhanced damages awards under Section 284 would inevitably increase—likely dramatically—under such a malleable standard.

The aftermath of *Octane Fitness, LLC* v. *ICON Health & Fitness, Inc.*, 134 S. Ct. 1749 (2014), in which this Court adopted a flexible standard for attorneys' fees under 35 U.S.C. 285, is illustrative. In the short time since that decision, the rate of successful attorney fee petitions has risen to as high as 50% in early 2015—up from a rate of only 13% in the year before *Octane*. See Bloomberg Law, *Debate on Patent Reform Legislation Continues in Congress* (Aug. 12, 2015) <tinyurl.com/bloombergdebate>. A relaxed standard for willfulness under Section 284 would likely trigger a similar increase in the rate of willfulness determinations.

Indeed, whereas rates of willfulness findings under the current standard have been estimated to be around 37%, rates of willfulness findings under the pre-*Seagate* totality-of-the-circumstances approaches were estimated to be as high as 64%. See Christopher B. Seaman, *Willful Patent Infringement and Enhanced Damages After In Re Seagate: An Empirical Study*, 97 Iowa L. Rev. 417, 444 (2012) (Seaman). Such a trend would be particularly troubling because willfulness is alleged in approximately 80% to 90% of all patent cases. See Kimberly A. Moore, *Empirical Statistics on Willful Patent Infringement*, 14 Fed. Cir. B.J. 227, 232 (2004); Christopher A. Cotropia & Mark A. Lemley, *Copying in Patent Law*, 87 N.C. L. Rev. 1421, 1440-1442 (2009) (Cotropia).

Such an increase in the frequency of enhanced damages awards would lead to a significant increase in the cost of developing and marketing technologically advanced products. Under Section 284, damages may be up to *three times* the amount of a compensatory infringement award. Such damages dwarf fee awards under Section 285 and can produce "a disproportionately large *in terrorem* effect," causing potentially accused infringers to choose to reserve funds for litigation or licensing fees at the expense of their research and development budgets. See FTC Study, ch. 5, at 30. As this Court recognized in *Octane Fitness*, the "threat of * * * treble damages" creates a much larger chilling effect on conduct "than does the mere shifting of attorney's fees." 134 S. Ct. at 1757. The threat of treble damages would also force many more, and more costly, settlements for innovators. The overwhelming percentage of patent cases settle before trial, and the mere threat of treble damages would cause technology companies to pay larger settlements at the expense of research and development.

The threat of increased damages awards, standing alone, would hamper innovation by companies such as amici. "When infringers are also innovators, the inflated damage awards they pay will reduce returns from their own [research and development] efforts, which can decrease innovation. Inflated awards can also drive higher licensing fees that increase costs and decrease innovation." Federal Trade Commission, *The Evolving IP Marketplace: Aligning Patent Notice and Remedies with Competition* 146 (Mar. 2011) <tinyurl.com/ftcremediesreport> (FTC Report).

2. Litigation under a more flexible willfulness standard would also be problematic because it would accelerate licensing demands. With the threat of enhanced

damages under a flexible and ambiguous standard, companies such as amici would be left with one of two choices when faced with a lawsuit: pay for a license, or choose to face the unpredictable risks and costs of litigation.

As discussed above, the receipt of demand letters is a routine event for companies such as amici. Under the current *Seagate* standard, technology companies frequently determine that the infringement allegations in the letters lack merit and reject those demands, and thus often conclude that the likelihood of paying enhanced damages is low. But as the Federal Trade Commission has explained, "[a]s the risk of paying an inflated award increases, would-be innovators will tend to enter into licenses rather than challenge claims that may be weak, perhaps paying unnecessary royalties." FTC Report 146. A more amorphous, less objective standard also increases the unpredictability of this calculus, because it heightens the risk that the question of enhanced damages would reach a jury and would do so under a standard giving jurors wide discretion.

A totality-of-the-circumstances standard would increase such risks to technology companies such as amici, encouraging them to take licenses even where the patentee asserts a patent of questionable validity. As this Court has explained, such scenarios "can impose a harmful tax on innovation." *Commil*, 135 S. Ct. at 1930 (internal quotation marks omitted). Accused infringers will be more likely to incur that tax as a "cost of doing business" if they cannot predictably determine that they could defeat a willfulness charge on the ground that the patent's validity is objectively questionable.

3. Another inevitable and troubling consequence of a flexible willfulness standard would be increased forum shopping. The more flexible the willfulness standard is, and the more deference given to the district courts in de-

termining willfulness, the more likely infringement plaintiffs would abuse the patent system by shopping for the forums where it is particularly difficult to obtain a dispositive ruling eliminating enhanced damages claims before trial. At least one study has shown that certain judicial districts make willfulness findings at a much higher rate than others. See Seaman 450-451. This Court should reject petitioners' totality-of-the-circumstances approach, which would revive the numerous problems associated with the failed pre-*Seagate* standard.

III. PETITIONERS' CONCERNS ABOUT COPYING DO NOT WARRANT A MORE 'FLEXIBLE' STANDARD BUT CAN INSTEAD BE ADDRESSED BY SLIGHTLY MODIFYING THE *SEAGATE* STANDARD

Throughout their briefs, petitioners assert that a broad willfulness standard is necessary to deter malicious efforts to copy a patentee's invention. As leading technology-based companies with substantial patent portfolios, amici are naturally also concerned about malicious copying. A key reason to enhance damages for willful infringement is to deter such copying. But the *Seagate* standard is sufficient to do so in the mine run of cases.

In those rare cases in which a patentee can furnish subjective proof that an accused infringer deliberately copied a patented product and *affirmatively believed* that it was infringing the patent, enhanced damages should apply as well, and the *Seagate* standard can be modified to ensure that it reaches those cases. Such a modification would be consistent with this Court's precedents governing other punitive-damages statutes. This Court should not discard the *Seagate* standard, which has worked well in the vast majority of cases, but instead

need only slightly modify it in order to address petitioners' copying concerns.

A. Petitioners' Concerns About Copying Are Overstated

1. The key drivers of innovation in today's economy are private firms such as amici that develop and patent novel technologies. Those firms are routinely haled into court as patent-infringement defendants. Accordingly, any benefits to innovation from an effort to reduce copying must be balanced against the costs that those same efforts impose on innovators. As discussed above, petitioners' policy arguments wholly ignore those costs. But petitioners also significantly overstate the benefits of, and the need for, strengthening the punishments for what they call "copying."

In fact, copying is not the significant problem that petitioners make it out to be. As an initial matter, mere copying is neither an act of infringement nor a policy evil to be deterred. As the government observes, copying can be socially beneficial and should be encouraged—for example, when an accused infringer has attempted to design around a patented product. See U.S. Br. 19 n.16. Perhaps for that reason, petitioners' arguments about copying focus on the scenario in which an infringer has not only based its accused product on a competitor's, but done so with full knowledge that in so doing it is infringing the competitor's patent.

That scenario, however, is a rare one. To begin with, of course, many patentees do not practice their inventions at all; in those cases, there is no product to copy. And although "the rhetoric of patent law * * * often seems to presuppose that defendants in patent cases are in fact engaged in copying," "overwhelmingly, they are not." Cotropia 1423, 1424. A 2009 study found that only about 10.9% of cases allege copying and that copying was

proven only in 1.76% of cases, making copying "the exception, not the rule," in patent cases more generally. *Id.* at 1424. Such rare cases should not drive wholesale revisions to the Federal Circuit's existing standard, which is otherwise workable and consistent with congressional intent.

There is no reason to believe that the rare case in which infringers have deliberately copied a patented product is inadequately deterred by the existing standard. Without any empirical support, petitioners suggest that the *Seagate* standard "result[s] in severe underdeterrence of culpable infringement." Stryker Br. 51-52. And they argue that "[t]he Federal Circuit has created a situation in which patent holders will almost never receive enhanced damages." Halo Br. 28. Those arguments are demonstrably invalid. Litigation statistics compiled in the three years after *Seagate* show that willfulness was found in 37.2% of the cases in which it was raised—down from a rate of 48.2% in the three years immediately before *Seagate*. Seaman 441. Those statistics also confirm that, "[w]hen a patentee offered evidence of copying by the accused infringer" in post-*Seagate* cases, "willfulness was found almost two-thirds (63.3 percent) of the time." *Id.* at 458. Thus, the *Seagate* standard has not caused a "severe" decrease in willfulness findings, nor has it prevented enhanced damages in cases involving copying.

2. In addition, the law already deters copying in numerous ways. To begin with, under the *Seagate* standard, every patentee whose patent is infringed by a purported "copyist" will necessarily receive compensatory damages, just not necessarily punitive damages. Those compensatory damages awards, of course, can run into the hundreds of millions of dollars. See Ryan Davis, IP Law 360, *Top IP Verdicts of 2014—And the Firms*

that Won Them <tinyurl.com/topipverdicts>. The risk of such large damage awards, even without further enhancement, deters companies such as amici from copying other companies' products. And the substantial litigation costs of any infringement case provides a further deterrent effect: for example, in cases in which more than $25 million is at stake, the median legal costs are around $5 million. See Jim Kerstetter, CNet, *How Much is that Patent Lawsuit Going to Cost You?* <tinyurl.com/patentcosts>. Indeed, the risks of substantial damages awards, and the concomitant costs of litigation, are so high that a substantial relaxing of the *Seagate* standard is likely to force innocent non-copyists to enter into unjustified settlements.

Beyond triggering compensatory damages, copying may also be a contributing factor to the imposition of liability for infringement in the first place. To be sure, a defendant that deliberately copied a patented product is especially likely to be found to infringe. But in addition, copying is expressly recognized by the Federal Circuit as a secondary consideration that can demonstrate nonobviousness and thus salvage the patentability of a patent that otherwise would have been held invalid. See, *e.g.*, *Circuit Check Inc.* v. *QXQ Inc.*, 795 F.3d 1331, 1337 (Fed. Cir. 2015); *Advanced Display Systems, Inc.* v. *Kent State University*, 212 F.3d 1272, 1285 (Fed. Cir. 2000). Indeed, in one of these cases, the district court recognized that it was "dramatically less likely that [defendant's] invalidity arguments were reasonable" in view of, among other things, its finding that plaintiff's invention was "copied by others, including [plaintiff's] two leading competitors." *Stryker Corp.* v. *Zimmer, Inc.*, Civ. No. 10-1223, 2013 WL 6231533, at *13 (W.D. Mich. Aug. 7, 2013). And in the other, evidence that "support[ed] an inference of copying" "weigh[ed] in favor of

nonobviousness." *Halo Electronics, Inc.* v. *Pulse Electronics, Inc.* Civ. No. 07-331, 2013 WL 2319145, at *6 (D. Nev. May 28, 2013). Regardless of whether it triggers enhanced damages, therefore, patent law attaches significant consequences to copying.

B. A Slight Modification To The *Seagate* Standard Can Adequately Address Any Remaining Concerns About Copying

Given those realities, a wholesale revision of the Section 284 standard is not necessary to deter copying. In most cases, "copying" is appropriately addressed simply by the *Seagate* standard for enhanced damages. The objective prong of that standard serves a gatekeeping function by ensuring that high-quality patents (*i.e.*, patents that have an objectively high likelihood of being valid and infringed) trigger enhanced damages, consistent with the goals of the patent system. And with respect to such high-quality patents, evidence of copying is still relevant under the subjective prong of the standard to show that the accused infringer "knew" of the objectively high likelihood of infringement. Thus, an infringer that copies a high-quality patent is already likely to be subject to enhanced damages under Section 284.

To the extent that the *Seagate* standard does not adequately deter copying, this Court may wish to recognize that enhanced damages are also available in cases in which the patentee furnishes subjective proof that an accused infringer deliberately copied a patented product and *affirmatively believed* that it was infringing the patent. Such a standard could apply in the rare circumstances in which the accused infringer infringed despite an active belief that it did not have a viable defense to infringement, even if it turned out that it did. And such a standard would ensure that an after-the-fact, *post hoc* defense to infringement would not defeat a finding of

willfulness in all cases, particularly in cases in which the accused infringer has engaged in egregious conduct.

Such a narrow modification of the *Seagate* standard, while addressing petitioners' concerns about extraordinary cases, would retain the virtues of the *Seagate* standard and minimize the risk of an explosion of willfulness findings in the district courts. And, as discussed below, it would be congruent with this Court's precedents.

C. The Modified *Seagate* Standard Is Consistent With Case Law Confirming That Section 284 Is A Punitive Statute That Requires Proof Of Objectively Reckless Conduct

The standard proposed here, though addressing petitioners' concern with deliberately infringing copying, maintains a high bar for enhanced damages. That standard is appropriate in view of this Court's precedents for several reasons.

1. Section 284 Is A Punitive Statute

Since the nineteenth century, this Court has reiterated time and again that Section 284 is a punitive statute. This Court characterized the predecessor to Section 284 as imposing "punitive damages to the extent of trebling the verdict." *Root* v. *Railway Co.*, 105 U.S. 189, 196 (1881). And the Court explained that punitive damages in this context should be viewed as "vindictive or exemplary damages, not to recompense the plaintiff, but to punish the defendant" for conduct that is "wanton or malicious." *Seymour* v. *McCormick*, 57 U.S. 480, 489 (1853). The Court has hewed to that characterization of Section 284 in more recent decisions. See *Exxon Shipping Co.* v. *Baker*, 554 U.S. 471, 507 (2008).

By contrast, Section 285—the fee statute addressed in *Octane Fitness, LLC* v. *ICON Health & Fitness, Inc.*,

134 S. Ct. 1749 (2014)—is unquestionably a compensatory statute. See *Highmark, Inc.* v. *Allcare Health Management System, Inc.*, 701 F.3d 1351, 1355 (Fed. Cir. 2012); *Mathis* v. *Spears*, 857 F.2d 749, 753 (Fed. Cir. 1988). For that reason alone, the Court's analysis in *Octane Fitness* is irrelevant to its interpretation of Section 284.

2. Section 284 Requires Willful Conduct

The standard advanced here appropriate for yet another reason. Again since the nineteenth century, this Court has made clear that enhanced damages for patent infringement are reserved for "wanton or malicious"—*i.e.*, "willful"—conduct. *Seymour*, 57 U.S. at 489; see *Safeco Insurance Co. of America* v. *Burr*, 551 U.S. 47, 57 (2007) (noting that, "'[a]lthough efforts have been made to distinguish' the terms 'willful,' 'wanton,' and 'reckless,' 'such distinctions have consistently been ignored, and the three terms have been treated as meaning the same thing, or at least as coming out at the same legal exit'" (quoting W. Page Keeton et al., *Prosser & Keeton on Law of Torts* § 34, at 212 (5th ed. 1984)).

Both before and after the passage of the 1952 Patent Act, this Court and lower courts alike have noted that Section 284 is aimed at punishing "willful" conduct. See, *e.g.*, *Dowling* v. *United States*, 473 U.S. 207, 227 n.19 (1985); *Aro Manufacturing Co.* v. *Convertible Top Replacement Co.*, 377 U.S. 476, 508 (1964); *Beatrice Foods Co.* v. *New England Printing & Lithographing Co.*, 923 F.2d 1576, 1578 (Fed. Cir. 1991); *Wilden Pump & Engineering Co.* v. *Pressed & Welded Products Co.*, 655 F.2d 984, 988-990 (9th Cir. 1981); *Union Carbide Corp.* v. *Graver Tank & Manufacturing Co.*, 282 F.2d 653, 675 (7th Cir. 1960); *Power Specialty Co.* v. *Connecticut Light & Power Co.*, 80 F.2d 874, 878 (2d Cir. 1936); *Baseball*

Display Co. v. *Star Ballplayer Co.*, 35 F.2d 1, 4 (3d Cir. 1929); *W.S. Godwin Co.* v. *International Steel Tie Co.*, 29 F.2d 476, 478 (6th Cir. 1928).

While willfulness is a longstanding requirement of Section 284, it has never been viewed as a requirement of Section 285, which was enacted more than 100 years after the enhanced-damages provision was first enacted in 1846. Unsurprisingly, then, *Octane Fitness*, "which does not address the term 'willful' at all," has no bearing on this case. 14-1513 Pet. App. 145a (Taranto, J., concurring in the denial of rehearing en banc).

3. *The Modified* Seagate *Standard Is Consistent With The Standards Applied Under Other Punitive Federal Statutes*

In numerous contexts, this Court has held that proof of either malicious or reckless conduct is a minimum requirement of punitive statutes. For example, under Title VII, punitive damages are reserved for cases of "intentional discrimination" that has been committed "'with malice or with reckless indifference to the federal protected rights of an aggrieved individual." *Kolstad* v. *American Dental Association*, 527 U.S. 526, 529-530 (1999) (quoting 42 U.S.C. 1981a(b)(1)). Likewise, under maritime law, the Court has explained that "[t]he prevailing rule" reserves punitive damages for "outrageous" conduct, including "'gross negligence,' 'willful, wanton, and reckless indifference for the rights of others,' or behavior even more deplorable." *Exxon Shipping*, 128 S. Ct. at 2621 (citation omitted). And in Section 1983 actions, punitive damages are available only when there is, at minimum, "reckless or callous disregard for the plaintiff's rights," or an "intentional violation[] of federal law." *Smith* v. *Wade*, 461 U.S. 30, 51 (1983). And, in defamation cases, this Court permits recovery of punitive dam-

ages only upon a showing of "knowledge of falsity or reckless disregard for the truth." *Gertz* v. *Robert Welch, Inc.*, 418 U.S. 323, 349 (1974).

The *Seagate* standard comports with those standards in the typical case in which proof of deliberate copying and infringement is absent. Consistent with this Court's traditional interpretations of punitive statutes, under the *Seagate* standard, Section 284 requires, at a minimum, a showing of "recklessness" to trigger treble damages. See *Safeco Insurance*, 551 U.S. at 57, 70 n.20 (rejecting proposition that "subjective bad faith can support a willfulness finding even when [a] company's reading of [a] statute is objectively reasonable").

This Court's precedents, however, also suggest that a tortfeasor may be punished for engaging in conduct that was affirmatively calculated to cause harm to the defendant. See, *e.g.*, *Exxon Shipping*, 128 S. Ct. at 2621; *Kolstad*, 527 U.S. at 529-530; *Smith*, 461 U.S. at 51; *Gertz*, 418 U.S. at 349. The narrow modification of *Seagate* proposed here addresses the situation where the evidence demonstrates that an accused infringer violated the patentee's rights deliberately: that is, by copying a patented product with an affirmative belief that doing so would be an act of infringement. Under those circumstances, it is appropriate to forgo an inquiry into whether the infringer had an objectively reasonable defense, because the infringer's conduct was "willful" in the most literal sense: it knew that it was deliberately co-opting a competitor's technology and believed that doing so would infringe the competitor's patent, yet committed the tort of patent infringement anyway.

Such a standard, however, should focus on whether the copying was a deliberate act of infringement, not on other aspects of the infringer's state of mind. Petitioners and the government propose a looser standard in which a

jury could award treble damages based *solely* on the defendant's having copied a patented product. But knowledge of copying is unquestionably not the same as belief of infringement, as petitioners implicitly concede when they suggest that the existence of an objectively reasonable defense can still preclude a finding of willfulness as long as the infringer knew of that defense at the time of its conduct. See, *e.g.*, Stryker Br. 49.

At the same time, when an infringer has advanced an objectively reasonable defense, enhanced damages under Section 284 should be available only in the rare circumstance in which the infringer not only is knowingly infringing, but has deliberately copied a patented technology. In the typical case in which an infringer learns of an allegation of infringement from a demand letter it receives about an existing product, *Seagate*'s objective prong should be dispositive. That is because such an infringer cannot be said to have violated the patentee's rights "with malice." *Kolstad*, 527 U.S. at 529-530. Rather, the salient question is whether such an infringer acted "with reckless indifference to the federal protected rights" of the patentee, see *ibid.*, by continuing to infringe despite the nonexistence of any objectively reasonable defense. That question is answered by the objective prong of the Federal Circuit's existing standard.

This narrow modification of the *Seagate* standard would address petitioners' concerns with copying, yet would largely avoid the problems inherent in the pre-*Seagate* totality-of-the-circumstances standard. In most cases, the presence of an objectively reasonable defense would suffice to insulate accused infringers from routine allegations of willfulness. Unlike petitioners' proposed standard, the standard advanced here will not lead to free-ranging allegations about—or discovery into—the infringer's state of mind, because the standard will re-

main an objective one in the common case in which the patentee cannot plausibly allege that the infringer knew of the patent (and deliberately copied it) when designing the infringing product. But in the rare case in which a defendant deliberately copied a patentee's product and there is affirmative evidence that it did so despite an affirmative belief that it was infringing, willfulness could be proved directly from evidence of the infringer's subjective knowledge. Truly "malicious" or "wanton" conduct could thus be punished, consistent with other punitive-damages statutes, notwithstanding the *post hoc* assertion of an objectively reasonable defense. See *Exxon Shipping*, 128 S. Ct. at 2621; *Kolstad*, 527 U.S. at 529-530.

In short, to address the rare case in which a defendant maliciously copies a product despite an affirmative belief that it does not have a viable defense to infringement, this Court need not dismantle the *Seagate* standard, which has worked well in the vast majority of cases (including the most common cases technology companies face). In these cases, the Court should reaffirm the core of the *Seagate* standard and, in the absence of sufficient evidence that respondents here affirmatively believed they were infringing the patents in suit, affirm the judgments below.

CONCLUSION

The judgments of the court of appeals should be affirmed.

Respectfully submitted.

KANNON K. SHANMUGAM
DAVID M. KRINSKY
ALLISON B. JONES
WILLIAMS & CONNOLLY LLP
725 Twelfth Street, N.W.
Washington, DC 20005
(202) 434-5000
kshanmugam@wc.com

JANUARY 2016

No. 14-1513; 14-1520

Supreme Court, U.S.
FILED
DEC 16 2015
OFFICE OF THE CLERK

IN THE

Supreme Court of the United States

HALO ELECTRONICS, INC.,

Petitioner,

v.

PULSE ELECTRONICS, INC., *et al.*,

Respondents.

STRYKER CORP., *et al.*,

Petitioners,

v.

ZIMMER, INC., *et al.*,

Respondents.

ON WRITS OF CERTIORARI TO THE UNITED STATES COURT OF APPEALS FOR THE FEDERAL CIRCUIT

BRIEF FOR INTELLECTUAL PROPERTY OWNERS ASSOCIATION AS *AMICUS CURIAE* IN SUPPORT OF NEITHER PARTY

Of Counsel:

PHILIP S. JOHNSON
President
KEVIN H. RHODES
Chair, Amicus Brief Committee
INTELLECTUAL PROPERTY OWNERS ASSOCIATION
1501 M Street, NW, Suite 1150
Washington, DC 20005
(202) 507-4500

PAUL H. BERGHOFF
Counsel of Record
SYDNEY R. KOKJOHN
MCDONNELL BOEHNEN HULBERT & BERGHOFF LLP
300 South Wacker Drive
Chicago, Illinois 60606
(312) 913-0001
berghoff@mbhb.com

Counsel for Amicus Curiae

263096

COUNSEL PRESS
(800) 274-3321 • (800) 359-6859

TABLE OF CONTENTS

Page

TABLE OF CONTENTS i

TABLE OF CITED AUTHORITIES ii

INTEREST OF *AMICUS CURIAE* 1

SUMMARY OF ARGUMENT 2

ARGUMENT 3

I. *Seagate* States the Correct Standard for Establishing Willful Infringement 3

II. While a Finding of Willful Infringement Is the Typical Basis for an Enhanced Damages Award, Entitlement to Enhanced Damages Can Be Predicated on Bad Faith 6

CONCLUSION 9

APPENDIX 1a

TABLE OF CITED AUTHORITIES

CASES *Page*

Aro Mfg. Co. v. Convertible Top Replacement Co.,
377 U.S. 476 (1964) 2, 3, 6, 8

Bard Peripheral Vascular, Inc. v.
W.L. Gore & Assocs., Inc.,
682 F.3d 1003 (Fed. Cir. 2012) 2

Day v. Woodworth,
54 U.S. 363 (1851) 3, 8

Highmark Inc. v.
Allcare Health Mgmt. Sys., Inc.,
134 S. Ct. 1744 (2014) 5

Jurgens v. CBK Ltd.,
80 F.3d 1566 (Fed. Cir. 1996) 7

Markman v. Westview Instruments, Inc.,
52 F.3d 967 (Fed. Cir. 1995) 7

Octane Fitness, LLC v.
ICON Health & Fitness, Inc.,
134 S. Ct. 1749 (2014) 5

Read Corp. v. Portec, Inc.,
970 F.2d 816 (1992) 7, 8

Rite–Hite Corp. v. Kelley Co.,
819 F.2d 1120 (Fed. Cir. 1987) 7

Cited Authorities

Page

Safeco Ins. Co. of Am. v. Burr,
551 U.S. 47 (2007).....4

S.C. Johnson & Son, Inc. v. Carter-Wallace, Inc.,
781 F.2d 198 (Fed. Cir. 1986).....7

In re Seagate Technology, LLC,
497 F.3d 1360 (Fed. Cir. 2007)..... *passim*

Seymour v. McCormick,
57 U.S. 480 (1853).....2, 5, 6

Smith v. Wade,
461 U.S. 30 (1983).....4

Teese v. Huntingdon,
64 U.S. 2 (1860).....3, 8

Whitserve, LLC v. Computer Packages, Inc.,
694 F.3d 10 (Fed. Cir. 2012).....5, 7

STATUTES

35 U.S.C. § 284..... *passim*

35 U.S.C. § 285.....5

OTHER AUTHORITIES

Christopher B. Seaman, *Willful Patent Infringement and Enhanced Damages After* In re Seagate, 97 Iowa L. Rev. 417 (2012).....4

INTEREST OF *AMICUS CURIAE*

Amicus curiae Intellectual Property Owners Association (IPO) is a non-profit, international trade association representing companies and individuals in all industries and fields of technology who own or are interested in intellectual property rights.[1] IPO's membership includes more than 200 companies and a total of over 12,000 individuals who are involved in the association, either through their companies or as inventor, author, executive, law firm, or attorney members. Founded in 1972, IPO represents the rights and interests of all owners of intellectual property, including patents. IPO regularly represents the interests of its members before Congress and the U.S. Patent and Trademark Office, and has filed numerous *amicus* briefs in this Court and other courts on significant issues facing intellectual property law. The members of IPO's Board of Directors, which approved the filing of this brief, are listed in the Appendix.[2]

IPO submits this brief because its members share a significant interest in establishing well-defined and appropriate standards for enhancing damages under Section 284 of the Patent Act. However, IPO takes no

---

1. No counsel for a party authored this brief in whole or in part, and no such counsel or party made a monetary contribution intended to fund the preparation or submission of this brief. No person other than the Amicus Curiae or its counsel made a monetary contribution to its preparation or submission. The parties have consented to the filing of this brief, including the consent of the Respondents in 14-1520 which is being submitted herewith.

2. IPO procedures require approval of positions in briefs by a two-thirds majority of directors present and voting.

position regarding an award of enhanced damages in either of the specific cases before the Court.

SUMMARY OF ARGUMENT

At issue is the standard for enhancing patent damages under Section 284 of the Patent Act. Section 284 is a punitive damages statute and provides that "the court may increase the damages up to three times the amount found or assessed." 35 U.S.C. § 284. A finding of willful infringement is the typical basis for an award of enhanced damages under Section 284. *See, e.g.*, *Aro Mfg. Co. v. Convertible Top Replacement Co.*, 377 U.S. 476, 508 (1964) (noting that a patentee "could in a case of willful or bad-faith infringement recover punitive or 'increased' damages under the statute's trebling provision"); *Seymour v. McCormick*, 57 U.S. 480, 489 (1853) ("It is true, where the injury is wanton or malicious, a jury may inflict vindictive or exemplary damages, not to recompense the plaintiff, but to punish the defendant.").

The Federal Circuit in *In re Seagate Technology, LLC* set forth its standard for finding willful infringement. Under *Seagate*, a finding of willful infringement requires: 1) the patentee to show "that the infringer acted despite an objectively high likelihood that its actions constituted infringement of a valid patent" (the objective prong) and 2) once the "threshold objective standard is satisfied, the patentee must also demonstrate that this objectively-defined risk ... was either known or so obvious that it should have been known to the accused infringer" (the subjective prong). 497 F.3d 1360, 1371 (Fed. Cir. 2007); *see also Bard Peripheral Vascular, Inc. v. W.L. Gore & Assocs., Inc.*, 682 F.3d 1003, 1005 (Fed. Cir. 2012).

IPO believes that the Federal Circuit's decision in *Seagate* states the correct standard for establishing willful infringement. IPO also believes that a finding of willful infringement provides a longstanding, well-established and well-defined standard for an award of enhanced damages under Section 284, firmly grounded in this Court's decisions, and thus willful infringement should continue as the typical basis for an award of enhanced damages under Section 284. Importantly, continuity in this regard will foster greater predictability concerning willfulness and enhanced damages for all parties involved in patent litigation.

To the extent that Section 284 also authorizes enhanced damages to be predicated on bases other than (or in addition to) a finding of willful infringement, as part of a "totality of the circumstances" analysis, enhanced damages should only be assessed against infringers who have acted in bad faith. *See, e.g., Aro*, 377 U.S. at 508; *Teese v. Huntingdon*, 64 U.S. 2, 9 (1860); *Day v. Woodworth*, 54 U.S. 363, 372 (1851). In other words, the presentation of a good faith (though unsuccessful) defense against a charge of patent infringement should not provide a basis for enhanced damages under Section 284.

ARGUMENT

I. *Seagate* States the Correct Standard for Establishing Willful Infringement

The Federal Circuit in *Seagate* stated its standard for establishing willful infringement – an objective test followed by a subjective test. IPO believes that this is the appropriate standard for determining willful

infringement. Indeed, this Court's precedent supports reliance on both objective and subjective prongs for finding willfulness in other contexts. For example, *Safeco Ins. Co. of Am. v. Burr* notes that "where willfulness is a statutory condition of civil liability, we have generally taken it to cover not only knowing violations of a standard, but reckless ones as well" and that "recklessness" is generally understood "as conduct violating an objective standard: action entailing 'an unjustifiably high risk of harm that is either known or so obvious that it should be known.'" 551 U.S. 47, 57, 68 (2007). Similarly, in *Smith v. Wade*, this Court held "that a jury may be permitted to assess punitive damages in an action under § 1983 . . . when it involves reckless or callous indifference to the federally protected rights of others." 461 U.S. 30, 56 (1983).

Seagate's reliance on both subjective and objective prongs in determining willfulness has additional benefits for the patent system. By requiring evidence of both objective recklessness and subjective bad faith, the *Seagate* decision has increased the ability of competitors seeking in good faith to design around patent rights to do so without risking a charge of willful infringement and reduced the frequency with which patent owners can allege willful infringement based on a scant evidentiary record.[3]

---

3. This greater degree of predictability was highlighted by an empirical study of enhanced damages decisions pre- and post-*Seagate*. The study by Mr. Seaman, a Washington and Lee School of Law professor, found that awards of enhanced damages based on a finding of willfulness decreased significantly from about 80% before *Seagate* to just over 50% after *Seagate*. Christopher B. Seaman, *Willful Patent Infringement and Enhanced Damages After* In re Seagate, 97 Iowa L. Rev. 417, 466 (2012).

This Court's decisions in *Octane Fitness, LLC v. ICON Health & Fitness, Inc.*, 134 S. Ct. 1749 (2014) and *Highmark Inc. v. Allcare Health Mgmt. Sys., Inc.*, 134 S. Ct. 1744 (2014) are not to the contrary. While *Octane* and *Highmark* rejected the use of a rigid, two-part test for imposing attorney's fees under Section 285, the purpose of Section 284, and the standards under which it authorizes an award of enhanced damages, are fundamentally different than Section 285. Enhanced damages under Section 284 are intended to be punitive and based on willful or bad faith infringement by the defendant, while an award of attorneys' fees under Section 285 is compensatory.[4] *See Seymour*, 57 U.S. at 489; *Whitserve, LLC v. Computer Packages, Inc.*, 694 F.3d 10, 37 (Fed. Cir. 2012) ("[S]imilar considerations may be relevant to both enhanced damages and attorney fees. However, the situations in which § 284 and § 285 may be invoked are not identical.").

IPO believes that the *Octane* and *Highmark* decisions do not affect the willfulness analysis set forth in *Seagate* as applied to Section 284. And since the use of both objective and subjective tests for determining willfulness is in line with this Court's precedents in other contexts, IPO respectfully asks this Court to confirm the Federal Circuit's *Seagate* standard for willful infringement.

---

4. Section 285 states that "[t]he court in exceptional cases may award reasonable attorney fees to the prevailing party."

II. While a Finding of Willful Infringement Is the Typical Basis for an Enhanced Damages Award, Entitlement to Enhanced Damages Can Be Predicated on Bad Faith

As discussed above, Section 284 is a punitive statute. If willful infringement is found, a court may enhance damages under Section 284. *See Aro Mfg. Co.*, 377 U.S. at 508 (noting that a patentee "could in a case of willful or bad-faith infringement recover punitive or 'increased' damages under the statute's trebling provision"); *Seymour*, 57 U.S. at 489 ("It is true, where the injury is wanton or malicious, a jury may inflict vindictive or exemplary damages, not to recompense the plaintiff, but to punish the defendant.").

Though IPO believes that a finding of willful infringement should be the most typical and primary basis supporting an award of enhanced damages, to the extent that other circumstances are included in the enhanced damages analysis, bad faith by the accused infringer should be required. Using bad faith as a touchstone (along with willful infringement) would eliminate the possibility that an accused infringer that has mounted a good faith defense against allegations of infringement would nonetheless be punished by an enhanced damages award. It is important that accused infringers be free to challenge the validity or scope of patents asserted in litigation without running the risk that a good faith (though unsuccessful) defense will result in enhanced damages.

In deciding whether to enhance damages, the Federal Circuit's prior decisions have described a two-step

process. *See, e.g., Whitserve, LLC*, 694 F.3d at 37. First, the fact finder determines "whether the infringer is guilty of conduct upon which increased damages may be based." *Id.* Next, the court determines "whether, and to what extent to increase the damages award given the totality of the circumstances." *Id.*

The guilty conduct in the first prong is most typically willful infringement. *Id.* Nevertheless, under current Federal Circuit case law, enhanced damages can be predicated on bases other than or in addition to a finding of willfulness. *See, e.g., Rite–Hite Corp. v. Kelley Co.*, 819 F.2d 1120, 1126 (Fed. Cir. 1987) ("Whether or not 'willfulness' is found, the court has authority to consider the degree of culpability of the tortfeasor. 'The measure of damages, as indeed the assessment of attorney fees, provides an opportunity for the trial court to balance equitable concerns as it determines whether and how to recompense the successful litigant.'" (quoting *S.C. Johnson & Son, Inc. v. Carter–Wallace, Inc.*, 781 F.2d 198, 201 (Fed. Cir. 1986)); *Jurgens v. CBK Ltd.*, 80 F.3d 1566, 1570 (Fed. Cir. 1996) ("Increased damages also may be awarded to a party because of the bad faith of the other side."). Possible factors for deciding "whether, and to what extent to increase damages," were identified by the Federal Circuit in *Read Corp. v. Portec, Inc.*, 970 F.2d 816, 827 (1992), *abrogated on other grounds by Markman v. Westview Instruments, Inc.*, 52 F.3d 967, 975-78 (Fed. Cir. 1995): (1) whether the infringer deliberately copied the ideas or design of another; (2) whether the infringer, when he knew of the other's patent protection, investigated the scope of the patent and formed a good-faith belief that it was invalid or that it was not infringed; (3) the infringer's behavior as a party to the litigation; (4) defendant's size

and financial condition; (5) closeness of the case; (6) duration of defendant's misconduct; (7) remedial action by the defendant; (8) defendant's motivation for harm; and (9) whether defendant attempted to conceal its misconduct. *Id.* at 827. These factors should remain instructive to a finding whether the defendant acted in bad faith and thus may be subject to an award of enhanced damages under Section 284.

IPO remains concerned, however, that an unfettered "totality of the circumstances" analysis for enhanced damages might decrease certainty and predictability in patent litigation. In the absence of clear touchstones, such as willful infringement and bad faith, the risk that enhanced damages might be awarded based on unclear or unpredictable standards risks the creation of greater leverage in patent licensing or settlement negotiations than is warranted by the merits of the underlying patent. For this reason, while the ability to enforce valid patents against infringers is an essential part of a strong patent system, the presentation of a good faith defense to a charge of infringement should never form the basis for the award of enhanced damages under Section 284. Therefore, while the factors enumerated by the Federal Circuit in *Read* may be helpful, IPO respectfully asks the Court to clarify that the award of enhanced damages should be limited to infringers who have been found to have willfully infringed, or to have acted in bad faith, consistent with this Court's decisions in *Aro*, *Teese*, and *Day*.

CONCLUSION

IPO asks the Court to confirm that the Federal Circuit's decision in *Seagate* sets forth the correct standard for establishing willful infringement. In addition, IPO asks the Court to clarify that enhanced damages should only be assessed against infringers who have willfully infringed or acted in bad faith.

Respectfully submitted,

Of Counsel:

PHILIP S. JOHNSON
President
KEVIN H. RHODES
Chair, Amicus Brief Committee
INTELLECTUAL PROPERTY OWNERS ASSOCIATION
1501 M Street, NW, Suite 1150
Washington, DC 20005
(202) 507-4500

PAUL H. BERGHOFF
Counsel of Record
SYDNEY R. KOKJOHN
MCDONNELL BOEHNEN HULBERT & BERGHOFF LLP
300 South Wacker Drive
Chicago, Illinois 60606
(312) 913-0001
berghoff@mbhb.com

Counsel for Amicus Curiae

APPENDIX

APPENDIX[1]

MEMBERS OF THE BOARD OF DIRECTORS INTELLECTUAL PROPERTY OWNERS ASSOCIATION

Steven Arnold
Micron Technology, Inc.

Paul Bartusiak
Motorola Solutions, Inc.

Edward Blocker
Koninklijke Philips N.V.

Tina M. Chappell
Intel Corp.

Karen Cochran
DuPont

William J. Coughlin
Ford Global Technologies LLC

Anthony DiBartolomeo
SAP AG

Luke R. Dohmen
Boston Scientific Corp.

Daniel Enebo
Cargill, Inc.

Barbara A. Fisher
Lockheed Martin

Louis Foreman
Enventys

Scott M. Frank
AT&T

David A. Frey
Rolls-Royce Corp.

Darryl P. Frickey
Dow Chemical Co.

Gary C. Ganzi
Evoqua Water Technologies, LLC

Krish Gupta
EMC Corporation

---

1. IPO procedures require approval of positions in briefs by a two-thirds majority of directors present and voting.

Appendix

Henry Hadad
Bristol-Myers Squibb Co.

Carl B. Horton
General Electric Co.

Michael Jaro
Medtronic, Inc.

Philip S. Johnson
Johnson & Johnson

Thomas R. Kingsbury
Bridgestone Americas, Inc.

Charles M. Kinzig
GlaxoSmithKline

David J. Koris
Shell International B.V.

William Krovatin
Merck & Co., Inc.

Dan Lang
Cisco Systems, Inc.

Allen Lo
Google Inc.

Timothy Loomis
Qualcomm, Inc.

Thomas P. McBride
Monsanto Co.

Steven W. Miller
Procter & Gamble Co.

Micky Minhas
Microsoft Corp.

Douglas K. Norman
Eli Lilly and Co.

Salvatore Pace
Praxair, Inc.

Richard F. Phillips
Exxon Mobil Corp.

Dana Rao
Adobe Systems Inc.

Kevin H. Rhodes
3M Innovative Properties Co.

Curtis Rose
Hewlett-Packard Co.

Appendix

Matthew Sarboraria
Oracle USA Inc.

Manny Schecter
IBM Corp.

Steven J. Shapiro
Pitney Bowes Inc.

Dennis C. Skarvan
Caterpillar Inc.

Daniel J. Staudt
Siemens Corp.

Brian Suffredini
United Technologies Corp.

James J. Trussell
BP America, Inc.

Phyllis Turner-Brim
Intellectual Ventures, LLC

Roy Waldron
Pfizer, Inc.

BJ Watrous
Apple Inc.

Stuart L. Watt
Amgen, Inc.

Michael Young
Roche, Inc.

Supreme Court, U.S.
FILED
DEC 16 2015
OFFICE OF THE CLERK

Nos. 14-1513, 14-1520

In the Supreme Court of the United States

HALO ELECTRONICS, INC.,
Petitioner,

v.

PULSE ELECTRONICS, INC. AND
PULSE ELECTRONICS CORPORATION
Respondents.

STRYKER CORPORATION, STRYKER PUERTO RICO, LTD.
AND STRYKER SALES CORPORATION
Petitioners,

v.

ZIMMER, INC. AND ZIMMER SURGICAL, INC.
Respondents.

On Writs of Certiorari to the United States
Court of Appeals for the Federal Circuit

BRIEF *AMICUS CURIAE* OF INTELLECTUAL PROPERTY PROFESSORS IN SUPPORT OF NEITHER PARTY

CHRISTOPHER B. SEAMAN
Counsel of Record
Washington and Lee
University School of Law
1 Denny Circle
Lexington, VA 24450
seamanc@wlu.edu
(540) 458-8520

JASON RANTANEN
University of Iowa
College of Law
280 Boyd Law Building
Melrose & Byington
Iowa City, IA 52232
jason-rantanen@uiowa.edu
(319) 335-9034

TABLE OF CONTENTS

Table of Cited Authorities iii

Interest of the *Amici Curiae* 1

Summary of the Argument 1

Argument 3

I. Willfulness Is the Appropriate Standard for Determining Whether Damages Should Be Increased Under Section 284. 3

A. The Statutory History of the Trial Court's Power to Increase Damages Consists of a Chain of Consistent Statutory Language, While Courts' Broader Authority to Award Monetary Remedies Has Changed Substantially 4

B. While Trial Courts Have Possessed Statutory Discretion to Increase Damages Since 1836, They Have Consistently Limited Exercise of That Discretion to Instances of Willfulness 8

C. Section 298 Confirms That Willfulness Is the Standard for Increasing Damages 15

II. The Federal Circuit's Current Two-Part Test for Determining Willfulness Is Incorrect as a Matter of Law 16

A. The Pre-*Seagate* Approach to Willfulness Was a Flexible Inquiry 18

B. The Federal Circuit's Current Two-Part Test for Evaluating Willfulness Is Fatally Flawed 19

1. The Federal Circuit's Rigid Test for Willfulness Is Similar to the Two-Part Test for Attorney's Fees Rejected in *Octane Fitness* 19

2. The Objective Prong Is an Overly Strict Gatekeeper to the Willfulness Inquiry 21

3. The Federal Circuit's Erroneous Two-Part Test Often Excludes Key Evidence Regarding an Infringer's State of Mind 24

III. Willfulness Should Be Determined Under the Totality of the Circumstances 27

A. The Statutory Text and Historical Practice Favor a Totality-of-the-Circumstances Approach 27

B. The District Court's Decision Should Be Reviewed for Abuse of Discretion on Appeal 29

C. A Totality-of-the-Circumstances Test Will Not Adversely Impact Attorney-Client Privilege 30

D. A Totality-of-the-Circumstances Test Will Not Result in a Dramatic Increase in Treble Damage Awards 32

Conclusion 33

Appendix – List of Signatories 1a

TABLE OF CITED AUTHORITIES

Cases **Page**

Addington v. Texas, 441 U.S. 418 (1979) 24

Am. Nicholson Pavement Co. v. City of Elizabeth, 1 F. Cas. 691 (C.C.D.N.J. 1874) 8, 10

Am. Safety Table Co. v. Schreiber, 415 F.2d 373 (2d Cir. 1969) 12

Aro Mfg. Co. v. Convertible Top Replacement Co., 377 U.S. 476 (1964) 12, 13

Bard Peripheral Vascular, Inc. v. W.L. Gore & Assocs., 682 F.3d 1003 (Fed. Cir. 2012)... 17, 18, 24

Bard Peripheral Vascular, Inc. v. W.L. Gore & Assocs., Inc., 776 F.3d 837 (Fed. Cir. 2015)..... 22

Bell v. McCullough, 3 F. Cas. 108 (S.D. Ohio 1858)..... 11

Birdsall v. Coolidge, 93 U.S. 64 (1876)..... 5, 6

Boesch v. Graff, 133 U.S. 697 (1890)..... 9, 10

Brodie v. Ophir Silver Mining Co., 4 F Cas. 202 (C.C.D. Cal. 1867) 10

Brooks Furniture Mfg., Inc. v. Dutailier Int'l, Inc., 393 F.3d 1378 (Fed. Cir. 2005)..... 20, 21

Buerk v. Imhaeuser, 4 F. Cas. 594 (C.C.S.D.N.Y. 1876)..... 8

Carnegie Mellon Univ. v. Marvell Tech Grp., Ltd., No. 2014-1492, 2015 WL 4639309 (Fed. Cir. Aug. 4, 2015) 22, 24

Carnegie Mellon Univ. v. Marvell Tech. Grp., Ltd., 805 F.3d 1382 (Fed. Cir. 2015) 22

Comark Commc'ns, Inc. v. Harris Corp., 156 F.3d 1182 (Fed. Cir. 1998) 18

Cooper Indus., Inc. v. Leatherman Tool Grp., Inc., 532 U.S. 424 (2001) 30

Day v. Woodworth, 54 U.S. 363 (1851) 9

DePuy Spine, Inc. v. Medtronic Sofamor Danek, Inc., 567 F.3d 1314 (Fed. Cir. 2009) 25, 26

Dow Chem. Co. v. Chem. Cleaning, Inc., 434 F.2d 1212 (5th Cir. 1970) 12

Dowling v. United States, 473 U.S. 207 (1985) 13

Fogerty v. Fantasy, Inc., 510 U.S. 517 (1994) ... 15, 28

Ford v. Kurtz, 12 F. 789 (C.C.N.D. Ill. 1882) 8, 10

Glob. Traffic Techs. LLC v. Morgan, No. 2014-1537, 2015 WL 3513416 (Fed. Cir. June 4, 2015) ... 22, 24

Global-Tech Appliances, Inc. v. SEB S.A., 131 S. Ct. 2060 (2011) 27

Guyon v. Serrell, 11 F. Cas. 132 (S.D.N.Y. 1847) 9

Halo Elecs., Inc. v. Pulse Elecs., Inc., 769 F.3d 1371 (Fed. Cir. 2014) 22

Harris Corp. v. Fed. Exp. Corp., 502 F. App'x 957 (Fed. Cir. 2013) 24

Highmark Inc. v. Allcare Health Mgmt. Sys., Inc., 134 S. Ct. 1744 (2014) 2, 29, 30

iLOR, LLC v. Google, Inc., 631 F.3d 1372 (Fed. Cir. 2011) 21

Imonex Servs., Inc. v. W.H. Munzprufer Dietmar Trenner GmbH, 408 F.3d 1374 (Fed. Cir. 2005) 20

In re Seagate Tech., LLC, 497 F.3d 1360 (Fed. Cir. 2007) ..... passim

Innovention Toys, LLC v. MGA Entm't, Inc., 611 F. App'x 693 (Fed. Cir. 2015) 24

Knorr-Bremse Systeme Fuer Nutzfahrzeuge GmbH v. Dana Corp., 383 F.3d 1337 (Fed. Cir. 2004) 15, 28, 30

Kori Corp. v. Wilco Marsh Buggies & Draglines, Inc., 761 F.2d 649 (Fed. Cir. 1985) 20

Lam, Inc. v. Johns-Manville Corp., 668 F.2d 462 (10th Cir. 1982) 12

Lee v. Mike's Novelties, Inc., 543 F. App'x 1010 (Fed. Cir. 2013) 24

Lyon v. Donaldson, 34 F. 789 (C.C.N.D. Ill. 1888) 8

Martin v. Franklin Capital Corp., 546 U.S. 132 (2005) 28

Mathis v. Spears, 857 F.2d 749 (Fed. Cir. 1988) 28

McLaughlin v. Richland Shoe Co., 486 U.S. 128 (1988) 32

Microsoft Corp. v. i4i Ltd. P'ship, 131 S. Ct. 2238 (2011) 4, 24

Milgo Elec. Corp. v. United Bus. Commc'ns, Inc., 623 F.2d 645 (10th Cir. 1980) 26

Octane Fitness, LLC v. ICON Health & Fitness, Inc., 134 S. Ct. 1749 (2014) ..... passim

Pall Corp. v. Micron Separations, Inc.,
66 F.3d 1211 (Fed. Cir. 1995) 19, 29

Powell v. Home Depot U.S.A., Inc.,
663 F.3d 1221 (Fed. Cir. 2011) 25

Presidio Components Inc. v. Am. Tech. Ceramics Corp., 723 F. Supp. 2d 1284 (S.D. Cal. 2010) 16

Presidio Components, Inc. v. Am. Tech. Ceramics Corp., 702 F.3d 1351 (Fed. Cir. 2012) 16

Read Corp. v. Portec, Inc.,
970 F.2d 816 (Fed. Cir. 1992) 32, 33

Rex Wine Corp. v. Dunigan,
224 F.2d 93 (2nd Cir. 1955) 3

Rite–Hite Corp. v. Kelley Co.,
819 F.2d 1120 (Fed. Cir. 1987) 18

Rolls–Royce Ltd., v. GTE Valeron Corp.,
800 F.2d 1101 (Fed. Cir. 1986) 19

Rosemount, Inc. v. Beckman Instruments, Inc.,
727 F.2d 1540 (Fed. Cir. 1984) 20

Russell v. Place, 21 F. Cas. 57
(C.C.N.D.N.Y. 1871) 8, 11

Safeco Ins. Co. of Am. v. Burr,
551 U.S. 47 (2007) 32

Schwarzel v. Holenshade,
21 F. Cas. 772 (S.D. Ohio 1866) 10, 11

Seymour v. McCormick, 57 U.S. 480 (1854) 9

Spine Sols., Inc. v. Medtronic Sofamor Danek USA, Inc., 620 F.3d 1305 (Fed. Cir. 2010) 22, 24

SRI Int'l, Inc. v. Advanced Tech. Labs., Inc.,
127 F.3d 1462 (Fed. Cir. 1997) 19, 29

Stryker Corp. v. Intermedics Orthopedics, Inc.,
96 F.3d 1409 (Fed. Cir. 1996) 26

Stryker Corp. v. Zimmer, Inc.,
782 F.3d 649 (Fed. Cir. 2015) 24

Sutton v. Gulf Smokeless Coal Co.,
77 F.2d 439 (4th Cir. 1935) 13

Teese v. Huntingdon, 64 U.S. 2 (1860) 9

Topliff v. Topliff, 145 U.S. 156 (1892) 10

Underwater Devices Inc. v. Morrison-Knudsen Co.,
717 F.2d 1380 (Fed. Cir. 1983) 16

Union Carbide Corp. v. Graver Tank & Mfg. Co.,
282 F.2d 653 (7th Cir. 1960) 12, 14

Unisplay, S.A. v. Am. Elec. Sign Co.,
69 F.3d 512 (Fed. Cir. 1995) 14

Univ. of Pittsburgh v. Varian Med. Sys., Inc.,
561 F. App'x 934 (Fed. Cir. 2014) 24

Van Kannel Revolving Door Co. v. Uhrich,
297 F. 363 (8th Cir. 1924) 11

Welling v. La Bau, 35 F. 302 (C.C.S.D.N.Y. 1888) 10

Yarway Corp. v. Eur–Control USA, Inc.,
775 F.2d 268 (Fed. Cir. 1985) 12

Statutes

17 U.S.C. § 505 15

35 U.S.C. § 70 (1934) 14

35 U.S.C. § 282 4

35 U.S.C. § 283 7

35 U.S.C. § 284 ..... passim

35 U.S.C. § 285 ..... passim

35 U.S.C. § 298 ..... 2, 15, 16, 31

Act of Apr. 17, 1800, 2 Stat. 37 (1800) 5

Act of July 4, 1836, 5 Stat. 117 (1836) 6

Act of July 8, 1870, 16 Stat. 198 (1870) 6

Act of Mar. 3, 1897, 29 Stat. 692 (1897) 7

Act of Feb. 21, 1922, 42 Stat. 389 (1922) 7

Act of Aug. 1, 1946, 60 Stat. 778 (1946) 7

Act of July 19, 1952, 66 Stat. 792 (1952) 7

Intellectual Property and Communications Omnibus Reform Act of 1999, 113 Stat. 1501A-521 (1999) .. 8

Leahy-Smith America Invents Act Technical Corrections, 126 Stat. 2456 (2013) 31

Treatises

Anthony William Deller, *Walker on Patents* (1937 ed.) 13

William C. Robinson, *The Law of Patents for Useful Inventions* (1890) 11, 14

Other Authorities

John R. Allison, Mark A. Lemley & David L. Schwartz, *Understanding the Realities of Modern Patent Litigation*, 92 Tex. L. Rev. 1769 (2014) ... 23

Christopher A. Cotropia & Mark A. Lemley, *Copying in Patent Law*, 87 N.C. L. Rev. 1421 (2009) 25

William F. Lee & Lawrence P. Cogswell, III, *Understanding and Addressing the Unfair Dilemma Created by the Doctrine of Willful Patent Infringement*, 41 Hous. L. Rev. 393 (2004) 30

Mark A. Lemley & Ragesh K. Tangri, *Ending Patent Law's Willfulness Game*, 18 Berkeley Tech. L.J. 1085 (2003) 15, 26

Kimberly A. Moore, *Judges, Juries, and Patent Cases—An Empirical Peek Inside the Black Box*, 99 Mich. L. Rev. 365 (2000) 33

Patent Litigation Strategies Handbook (Barry L. Grossman & Gary M. Hoffman eds., 3d ed. 2010) 23

John J. Pavlak, *The Increasing Risk of Willful Patent Infringement*, 65 J. Pat. Off. Soc'y 603 (1983) 12

Jason Rantanen, *An Objective View of Fault in Patent Infringement*, 60 Am. U. L. Rev. 1575 (2011) 23

Christopher B. Seaman, *Willful Patent Infringement and Enhanced Damages After* In re Seagate*: An Empirical Study*, 97 Iowa L. Rev. 417 (2012) 23, 25, 31, 33

INTEREST OF THE *AMICI CURIAE*[1]

Amici are law professors who specialize in intellectual property law and who have previously published on, or have interest in, the issues of willful infringement, patent remedies, and, more broadly, the proper functioning of the patent system. The undersigned *amici* have no personal stake in the outcome of these cases, but have an interest in seeing that the patent laws operate in a way that promotes innovation.

SUMMARY OF THE ARGUMENT

Section 284 of the Patent Act, 35 U.S.C. § 284, like its precursors, does not grant trial judges authority to increase damages up to three times the amount of actual damages for any reason. Rather, the statutory text has been consistently been applied by courts to increase damages when the infringer has engaged in especially wrongful infringement, now commonly called willfulness. Absent clear evidence to the contrary, the Court should conclude that in enacting § 284, Congress incorporated the settled meaning developed in over a century of case

---

[1] Pursuant to Supreme Court Rule 37.6, *amici curiae* affirm that no counsel for a party authored this brief in whole or in part, that no counsel or a party made a monetary contribution intended to fund the preparation or submission of this brief, and that no person other than *amici curiae*, their members, or their counsels made a monetary contribution to its preparation or submission. Pursuant to Supreme Court Rule 37.2, each party has consented to the filing of this brief, and copies of the consents are on file with the Clerk of the Court.

law that increased damages[2] should be awarded only for willfulness. This settled meaning is confirmed by Congress's recent enactment of 35 U.S.C. § 298, which prohibits use of an accused infringer's failure to obtain or present advice of counsel as evidence that it "willfully infringed" the patent—language which only makes sense if willfulness is the standard for increasing damages under § 284.

Although correctly recognizing that willfulness is the sole basis for increasing damages under § 284, the current test adopted by the U.S. Court of Appeals for the Federal Circuit for determining willfulness is incorrect as a matter of law. Starting with its en banc decision in *In re Seagate Technology, LLC*, 497 F.3d 1360 (Fed. Cir. 2007), the Federal Circuit abandoned its prior totality-of-the-circumstances approach in favor of a rigid, two-part test that terminates the willfulness inquiry if the accused infringer can offer a reasonable litigation defense to infringement, without considering any evidence regarding the accused infringer's state of mind. The Federal Circuit's adoption and application of this rigid two-part test for determining willfulness conflicts with the discretionary language of § 284, particularly in light of this Court's recent decisions in *Octane Fitness, LLC v. ICON Health & Fitness, Inc.*, 134 S. Ct. 1749 (2014), and *Highmark Inc. v. Allcare Health Management System, Inc.*, 134 S. Ct.

---

[2] For consistency with the statutory text, this brief uses "increased damages" in lieu of "enhanced damages." *See* 35 U.S.C. § 284 (referring to "[i]ncreased damages").

1744 (2014), which rejected a similarly inflexible approach for awarding attorney's fees under § 285.

In lieu of the Federal Circuit's inflexible approach, this Court should hold that district courts should determine willfulness—and thus eligibility for increased damages—by requiring the patentee to demonstrate that the infringer at least recklessly violated the patentee's rights under a totality of the circumstances. In addition, because willfulness is a fact-intensive determination best suited for resolution by the trial court, this decision should be reviewed for abuse of discretion on appeal.

ARGUMENT

I. Willfulness Is the Appropriate Standard for Determining Whether Damages Should Be Increased Under Section 284

Section 284, like its precursors, allows trial judges to increase damages up to three times the amount determined to be adequate to compensate for the infringement. Courts have long understood that this authority to increase damages is used only in situations where the infringer engaged in egregious or especially wrongful infringement of a patent, a concept generally known as willful infringement.[3]

---

[3] There is no reason to depart from the terminology of "willfulness" or to introduce slight distinctions for a word that, as Judge Learned Hand once observed, "always gathers an unhappy cloud of uncertainty that has caused an abundance of discussion." *Rex Wine Corp. v. Dunigan*, 224 F.2d 93, 95 (2nd Cir. 1955).

While the provenance of the willful infringement standard is well established, *amici* are concerned about suggestions that this Court condone alternative grounds for increasing damages under § 284. Despite courts' and commentators' occasional discussion of alternate possible theories for increasing damages, actual reliance on those theories is lacking. No decision by this Court has ever affirmed a discretionary increase in damages, let alone one based on a theory other than willfulness.

Thus, absent clear evidence to the contrary, the Court should infer that in enacting § 284, Congress incorporated the "settled meaning" that increased damages should be awarded only for willfulness. *Cf. Microsoft Corp. v. i4i Ltd. P'ship*, 131 S. Ct. 2238, 2246 (2011) (holding that in enacting 35 U.S.C. § 282, which declared a patent is "presumed valid," Congress also incorporated the "settled meaning" from case law that a defendant raising an invalidity defense bore a "heightened standard of proof" for overcoming the presumption). This standard is part of the firm bedrock of patent law.

A. The Statutory History of the Trial Court's Power to Increase Damages Consists of a Chain of Consistent Statutory Language, While Courts' Broader Authority to Award Monetary Remedies Has Changed Substantially

Since its enactment in 1836, the statutory language granting trial judges the discretion to increase damages has remained largely the same,

although the courts' broader authorization to award monetary remedies has changed substantially. The statutory history of trial courts' power to award monetary remedies actually involves two separate chains of statutory provisions: a first section applying to suits brought in actions at law, and a second section largely applying to suits brought in equity. As explained below, the statutory language permitting a court to award up to three times the amount of actual damages consistently appeared in the remedial provision for actions at law, which underwent only minor alterations between 1836 and 1952. The court in equity's statutory authority to award monetary remedies, in contrast, underwent several major changes over the same time.

Prior to the 1836 Patent Act, successful patent holders were automatically entitled to "a sum equal to three times the actual damage sustained." Act of Apr. 17, 1800, ch. 25, § 3, 2 Stat. 37, 38 (1800); *see also Birdsall v. Coolidge*, 93 U.S. 64, 68-69 (1876) (discussing the history of the patent statutes in the 1800s). Among the many changes in the 1836 Patent Act was the replacement of the mandatory trebling provision with permissive language. The relevant portion read:

> [I]t shall be in the power of the court to render judgment for any sum above the amount found by such verdict as the actual damages sustained by the plaintiff, not exceeding three times the amount thereof, according to the circumstances of the case, with costs

Act of July 4, 1836, ch. 357, § 14, 5 Stat. 117, 123 (1836). The 1870 Patent Act contained similar language:

> [T]he court may enter judgment thereon for any sum above the amount found by the verdict as the actual damages sustained, according to the circumstances of the case, not exceeding three times the amount of such verdict, together with the costs.

Act of July 8, 1870, ch. 230, § 59, 16 Stat. 198, 207 (1870). That language remained unchanged until 1952, when Congress enacted now-Section 284.

In contrast, the parallel remedial provision applying to suits in equity changed dramatically between 1836 and 1952. Section 17 of the 1836 Patent Act provided that infringement suits could be brought in equity as well as law. § 17, 5 Stat. at 124. Although this provision referred simply to the court's power to "grant injunctions[] according to the course and principles of courts of equity," *id.*, courts also exercised their equitable powers to award the infringer's profits. *Birdsall*, 93 U.S. at 68-69. This power was codified in § 55 of the 1870 Patent Act, in which Congress specifically granted a court sitting in equity the authority to award "the profits to be accounted for by the defendant," as well as "the damages the complainant has sustained." § 55, 16 Stat. at 206. Congress also granted courts sitting in equity "the same powers to increase the same in its discretion that are given by this act to increase the damages found by verdicts in actions upon the case," *id.*, a clear reference to the trebling power in § 59 of that act. *See Birdsall*, 93 U.S. at 69-70.

This provision underwent additional changes over the next eighty years that further altered the trial court's authority to award monetary remedies while sitting in equity.[4] Notably, in 1946, Congress eliminated language authorizing courts sitting in equity to award the infringer's profits, while at the same time granting them discretionary authority to award attorney's fees to the prevailing party. Act of Aug. 1, 1946, ch. 726, 60 Stat. 778, 778 (1946); *see also Octane Fitness,* 134 S. Ct. at 1753. Despite these changes, courts continued to have the "same power to increase the assessed damages, in its discretion, as . . in actions in the nature of actions of trespass upon the case"—*i.e.*, actions at law. 60 Stat. at 778.

The 1952 Patent Act collapsed the two remedial provisions into § 284, providing separate sections for injunctive relief (35 U.S.C. § 283) and the award of attorney's fees in "exceptional cases" (35 U.S.C. § 285). Act of July 19, 1952, Pub. L. No. 82-593, §§ 283, 285, 66 Stat. 792, 812-13 (1952). The second paragraph of § 284 states:

> When the damages are not found by a jury, the court shall assess them. In either event the court may increase the damages up to three times the amount found or assessed.

---

[4] These changes included a six-year limitation on profits or damages, Act of Mar. 3, 1897, ch. 391, § 6, 29 Stat. 692, 694 (1897), and authority to award "a reasonable sum as profits or general damages for the infringement" when "damages or profits are not susceptible of calculation and determination with reasonable certainty," Act of Feb. 21, 1922, ch. 58, § 8, 42 Stat. 389, 392 (1922).

35 U.S.C. § 284 (1952). Since 1952, Congress has made only a single substantive change to § 284, to exclude provisional rights under § 154(d) from increased damages. *See* Intellectual Property and Communications Omnibus Reform Act of 1999, Pub. L. No. 106-113, § 4504, 113 Stat. 1501A-521, 1501A-564 (1999).

B. While Trial Courts Have Possessed Statutory Discretion to Increase Damages Since 1836, They Have Consistently Limited Exercise of That Discretion to Instances of Willfulness

Since the nineteenth century, courts have consistently limited the exercise of their discretion to increase damages to circumstances involving especially wrongful infringement. Court opinions have used an array of labels to express this concept. *See, e.g.*, *Lyon v. Donaldson*, 34 F. 789, 793 (C.C.N.D. Ill. 1888) ("flagrant violation" of patentee's rights); *Ford v. Kurtz*, 12 F. 789, 789 (C.C.N.D. Ill. 1882) (Harlan, J.) ("malicious" infringement); *Buerk v. Imhaeuser*, 4 F. Cas. 594, 595 (C.C.S.D.N.Y. 1876) ("wil[l]ful" infringement); *Am. Nicholson Pavement Co. v. City of Elizabeth*, 1 F. Cas. 691, 700 (C.C.D.N.J. 1874) ("wanton" infringement); *Russell v. Place*, 21 F. Cas. 57, 58 (C.C.N.D.N.Y. 1871) ("deliberate and intentional" infringement). But each of these terms reflects a common meaning: that the infringement was especially egregious, rather than simply being a typical patent infringement suit. The well-understood modern terminology for this concept is willfulness, a term that encompasses bad faith infringement. *See Seagate*, 497 F.3d at 1368.

Early case law recognized willfulness as the primary or sole grounds for increasing damages. The earliest reported case applying the increased damages provision appears to be *Guyon v. Serrell*, 11 F. Cas. 132 (C.C.S.D.N.Y. 1847), in which the trial court denied a request to increase damages where the defendant generally acted in good faith. *Id.* at 133. Four years later, in *Day v. Woodworth*, 54 U.S. 363 (1851), this Court noted that "if, in the opinion of the court, the defendant has not acted in good faith, or has been stubbornly litigious, or has caused unnecessary expense and trouble to the plaintiff, the court may increase the amount of the verdict, to the extent of trebling it." *Id.* at 372. In *Seymour v. McCormick*, 57 U.S. 480 (1854), the Court, reversing a jury award of damages, distinguished between actual damages and "vindictive or exemplary damages," which are intended "not to recompense the plaintiff, but to punish the defendant" in cases "where the injury is wanton or malicious." *Id.* at 489. Subsequent opinions of this Court used similar language. *See, e.g., Teese v. Huntingdon*, 64 U.S. 2, 9 (1860) ("[I]f, in the opinion of the court, the defendant has not acted in good faith, or has caused unnecessary expense and injury to the plaintiff, the court may render judgment for a larger sum, not exceeding three times the amount of the verdict."); *Boesch v. Graff*, 133 U.S. 697, 699, 704 (1890) (reviewing a decision that found infringement "willful, wanton, and persistent" but reversing on other grounds).[5]

---

[5] In the only decision by this Court actually reviewing a

In fact, motions to increase damages at this time were so unusual that more than one judge remarked on the rarity of such requests. *See Schwarzel v. Holenshade*, 21 F. Cas. 772, 773 (S.D. Ohio 1866) ("It is somewhat remarkable that in the almost countless reports of trials of patent right cases in the United States, there are so few in which the statute authorizing a judgment for treble damages has been presented for judicial consideration."); *see also Welling v. La Bau*, 35 F. 302, 304 (C.C.S.D.N.Y. 1888) ("The limited number of reported cases upon this subject is of itself proof of the care with which the courts have exercised the discretion given by the statute."). When patent holders did bring motions to increase damages, courts denied them if the defendant was not a willful infringer. *See, e.g., Ford*, 12 F at 789 (declining to increase damages and remarking "[t]he infringement by defendants of complainant's patent was neither wil[l]ful nor malicious"); *Am. Nicholson Pavement Co.*, 1 F. Cas at 698 ("[T]here is nothing in the case, which authorizes the court, if it had the power, and were so disposed, to visit upon the defendants any consequences in the nature of a penalty. They were not wanton infringers."); *see also Brodie v. Ophir Silver Mining Co.*, 4 F Cas. 202, 203-04 (C.C.D. Cal.

---

claim for increased damages, *Topliff v. Topliff*, 145 U.S. 156, 174 (1892), the Court affirmed the trial court's decision not to increase damages, while also suggesting that the Court itself would have increased them given the circumstances. Those circumstances fit the mold of willful infringement. None of the Court's other decisions, aside from *Boesch*, actually involved a claim to increased damages.

1867) (stating the power to increase damages "should only be exercised to remunerate parties who have been driven to litigation to sustain their patents by wanton and persistent infringement").

Indeed, so well established was this standard that in the 1890 edition of his classic treatise on patent law, William Robinson observed that courts exercised their power to increase damages "principally in cases of wanton infringement, or where the defendant has compelled the plaintiff to resort to needless and expensive litigation." 3 William C. Robinson, *The Law of Patents for Useful Inventions* § 1069, at 365 (1890). Each of the cases cited by Robinson for this claim either denied an increase because the conduct was not willful or wanton, *see, e.g.*, *Schwarzel*, 21 F. Cas. at 772-74, or increased damages because, for example, the infringement appeared "deliberate and intentional," *Russell*, 21 F. Cas. at 58. These decisions were consistent with the view that the purpose of the increased damages provision was to address this specific type of activity. *See, e.g.*, *Bell v. McCullough*, 3 F. Cas. 108, 109 (S.D. Ohio 1858) (rejecting treble damages and observing that the "object of this provision was to remunerate patentees who were compelled to sustain their patents against wanton and persevering infringers").

Courts continued to apply a similar approach throughout the twentieth century. For example, in *Van Kannel Revolving Door Co. v. Uhrich*, 297 F. 363 (8th Cir. 1924), the Eighth Circuit affirmed increased damages where "the defendants were willful and persistent infringers." *Id.* at 367.

Similarly, in *Union Carbide Corp. v. Graver Tank & Manufacturing Co.*, 282 F.2d 653 (7th Cir. 1960), the Seventh Circuit, after extensively examining potential alternative rationales for increasing damages, concluded that "it is only on the basis of conscious and wil[l]ful infringement that exemplary or punitive damages are allowed." *Id.* at 675.

Decisions from the last fifty years relying on willfulness as a standard for increasing damages under § 284 are legion. *See, e.g., Lam, Inc. v. Johns-Manville Corp.*, 668 F.2d 462, 474 (10th Cir. 1982); *Dow Chem. Co. v. Chem. Cleaning, Inc.*, 434 F.2d 1212, 1214 (5th Cir. 1970); *Am. Safety Table Co. v. Schreiber*, 415 F.2d 373, 378 (2d Cir. 1969); *see also* John J. Pavlak, *The Increasing Risk of Willful Patent Infringement*, 65 J. Pat. Off. Soc'y 603, 604 (1983) ("Section 284 of the patent laws permits a court to increase damages 'up to three times the amount found or assessed.' While this statute does not specify the grounds for such an increase, the courts have historically limited increased damages to willful infringement."). Since the inception of the Federal Circuit, willfulness has been the gold standard for increasing damages under § 284. *See, e.g., Yarway Corp. v. Eur–Control USA, Inc.*, 775 F.2d 268, 277 (Fed. Cir. 1985) ("It is well-settled that enhancement of damages [under § 284] must be premised on willful infringement or bad faith.").

Similarly, this Court has repeatedly used the language of willfulness to define when increased damages could be awarded under § 284. In *Aro Manufacturing Co. v. Convertible Top Replacement Co.*, 377 U.S. 476 (1964), the Court noted that a

patentee "could in a case of willful or bad-faith infringement recover punitive or 'increased' damages under the statute's trebling provision." *Id.* at 508. More recently, in *Dowling v. United States*, 473 U.S. 207 (1985), the Court, citing § 284, observed that "[a]mong the available remedies are treble damages for willful infringement." *Id.* at 227 n.19

Although commentators have occasionally discussed other rationales for increasing damages, those theories have found little purchase in actual decisions. For example, while the 1937 version of *Walker on Patents* proclaimed that a court could increase damages by awarding the infringer's profits, it cited no case where that was actually done.[6] *See* 3 Anthony William Deller, *Walker on Patents* § 835, at 2175 (1937). In any event, while awarding the infringer's profits was a viable legal theory during the nineteenth and early twentieth century, the 1946 Patent Act eliminated that possibility. *See Aro Mfg. Co.*, 377 U.S. at 505-06.

The difficulty of proving damages has been offered as another possible rationale for increasing damages, *see, e.g.*, *Seagate*, 497 F.3d at 1378 (Gajarsa, J., concurring); *Trio Process Corp. v. L. Goldstein's Sons, Inc.*, 638 F.2d 662, 662-63 (3d Cir. 1981), but such claims are complicated by the existence of separate authority on this point. For example, between 1922 and 1946, the Patent Act

---

[6] The only case cited by *Walker on Patents* for this proposition involved an increase on the ground that "there was deliberate and willful infringement." *Sutton v. Gulf Smokeless Coal Co.*, 77 F.2d 439, 442 (4th Cir. 1935) (per curiam).

expressly authorized courts to decide compensation when "damages or profits are not susceptible of calculation and determination with reasonable certainty." 35 U.S.C. § 70 (1934). The text and structure of § 284 also suggest that damages cannot be increased due to proof issues. The first paragraph of § 284 requires an "award" of "damages adequate to compensate for the infringement," which shall be "in no event less than a reasonable royalty." 35 U.S.C. § 284. Only after adequate compensatory damages are awarded can the court "increase" them, as provided in the second paragraph. *Id.* The availability of a reasonable royalty, which "necessarily involves an element of approximation and uncertainty," *Unisplay, S.A. v. Am. Elec. Sign Co.*, 69 F.3d 512, 517 (Fed. Cir. 1995), for determining adequate compensation further undermines this claim. *See Union Carbide*, 282 F.2d at 673-75 (declining to increase damages when compensatory damages were calculated on a reasonable royalty basis).

Some authorities also have suggested that abuse of the litigation process might be an alternative basis for increasing damages, but evidence that courts routinely did so is lacking. For instance, Robinson's 1890 treatise referred to "needless and expensive litigation," although none of his cited cases actually increased damages for that reason. *See* Robinson, *supra*, at 365. And even if abusive litigation tactics might once have been a valid rationale for increasing damages, Congress's creation of a separate statutory provision to address such behavior in the 1952 Patent Act eliminated that rationale. *See* 35 U.S.C. § 285. Moreover, permitting

courts to increase damages under § 284 for this reason would create a new, one-sided remedy for litigation misconduct—and there is no evidence that Congress intended such an outcome. *Cf. Fogerty v. Fantasy, Inc.*, 510 U.S. 517, 523, 534 (1994) (holding prevailing plaintiffs and defendants in copyright litigation must be "treated alike" for awarding attorney's fees under 17 U.S.C. § 505 because a contrary interpretation of the statute lacked support in the legislative history).

In sum, both the evolution of the statutory text and its application by courts demonstrates that increased damages have been consistently granted for one reason—willful infringement.

C. Section 298 Confirms That Willfulness Is the Standard for Increasing Damages

In addition, Congress recently confirmed that § 284 rests on a determination of willfulness. In 2011, Congress added § 298 as part of the Leahy-Smith America Invents Act, which states in relevant part that failure to obtain or introduce advice of counsel "may not be used to prove that the accused infringer willfully infringed the patent." 35 U.S.C. § 298 (2012). This provision was intended to protect against waiver of attorney-client privilege in order to defend against a claim of willfulness under § 284 by offering an opinion of counsel regarding non-infringement and/or invalidity of the asserted claims, a situation that commonly occurred prior to *Knorr-Bremse Systeme Fuer Nutzfahrzeuge GmbH v. Dana Corp.*, 383 F.3d 1337 (Fed. Cir. 2004) (en banc). *See* Mark A. Lemley & Ragesh K. Tangri, *Ending Patent Law's Willfulness Game*, 18 Berkeley

Tech. L.J. 1085, 1087-88 (2003). Section 298 also abrogated case law suggesting the absence of an opinion of counsel was relevant to determining willfulness even after *Seagate*. *See, e.g.*, *Presidio Components Inc. v. Am. Tech. Ceramics Corp.*, 723 F. Supp. 2d 1284, 1324 (S.D. Cal. 2010), *aff'd in relevant part*, 702 F.3d 1351 (Fed. Cir. 2012). "[W]illfully infringed" in § 298 only makes sense if it refers to the standard for increasing damages under § 284.

II. The Federal Circuit's Current Two-Part Test for Determining Willfulness Is Incorrect as a Matter of Law

Until 2007, the issue of willful patent infringement was "a factual determination to be made after consideration of the totality of the circumstances." *Am. Med. Sys., Inc. v. Med. Eng'g Corp.*, 6 F.3d 1523, 1530 (Fed. Cir. 1993). On appeal, the Federal Circuit reviewed the "determination of willfulness under a clearly erroneous standard." *Id.*

But in *Seagate*, the Federal Circuit, sitting en banc, substantially reshaped the legal standard for establishing willfulness. Responding to arguments that its prior jurisprudence set too low a bar for finding willfulness,[7] the Federal Circuit announced

---

[7] In particular, the Federal Circuit concluded in *Seagate* that the so-called "affirmative duty of due care" articulated in *Underwater Devices, Inc. v. Morrison-Knudsen Co.*, 717 F.2d 1380 (Fed. Cir. 1983), which required a potential infringer with notice of another's patent rights to exercise due care—most commonly by obtaining the advice of competent legal counsel prior to engaging in potentially infringing conduct—was "more

that a patentee must make "at least a showing of objective recklessness" by the accused infringer. *Seagate*, 497 F.3d at 1371. It then articulated a two-part test for this showing:

> [T]o establish willful infringement, a patentee must show by clear and convincing evidence that the infringer acted despite an objectively high likelihood that its actions constituted infringement of a valid patent. The state of mind of the accused infringer is not relevant to this objective inquiry. If this threshold objective standard is satisfied, the patentee must also demonstrate that this objectively-defined risk . . . was either known or so obvious that it should have been known to the accused infringer.

Id. (internal citation omitted). In *Bard Peripheral Vascular, Inc. v. W.L. Gore & Associates*, 682 F.3d 1003 (Fed. Cir. 2012), the en banc Federal Circuit held that the first part of the *Seagate* test—the so-called objective prong—was "best decided by the judge as a question of law subject to *de novo* review,"

---

akin to negligence" than willfulness and thus overruled it. *Seagate*, 497 F.3d at 1370-71. *Amici* agree that a negligence-like standard is inappropriate for determining willfulness and that a showing of at least recklessness is required under § 284. However, *amici* contend this showing should be made under a totality of the circumstances, rather than the rigid test articulated in *Seagate* and its progeny. *See infra* pp. 27-28.

even though this inquiry often involves underlying factual issues.[8] *Id.* at 1007.

For the reasons described below, the Federal Circuit's current rigid two-part test for determining willfulness (and thus eligibility for increased damages) under § 284 should be rejected in favor of a flexible, totality-of-the-circumstances inquiry.

A. The Pre-*Seagate* Approach to Willfulness Was a Flexible Inquiry

For nearly 25 years prior to its decision in *Seagate*, the Federal Circuit employed a flexible, totality-of-the-circumstances approach in deciding whether an infringer's conduct was willful. As one decision put it:

> In determining whether willfulness has been shown, we look to the totality of the circumstances, understanding that willfulness, as in life, is not an all-or-nothing trait, but one of degree. It recognizes that infringement may range from unknowing, or accidental, to deliberate, or reckless, disregard of the patentee's legal rights.

Comark Commc'ns, Inc. v. Harris Corp., 156 F.3d 1182, 1190 (Fed. Cir. 1998) (internal quotations and citation omitted)); *see also Rolls–Royce Ltd., v. GTE*

---

[8] The majority opinion in *Bard* noted that the objective reasonableness inquiry was a question of law, even when the asserted defenses that allegedly rendered the infringer's conduct reasonable involved questions of fact, such as anticipation. 682 F.3d at 1007.

Valeron Corp., 800 F.2d 1101, 1110 (Fed. Cir. 1986) ("In respect of willfulness, there cannot be hard and fast *per se* rules."). This inquiry "include[d] subjective as well as objective elements," *Pall Corp. v. Micron Separations, Inc.*, 66 F.3d 1211, 1221 (Fed. Cir. 1995), such as "the closeness or complexity of the legal and factual questions presented"; whether the infringer had engaged in copying of the patentee's product, or alternatively whether it had "attempt[ed] to design around and avoid the patent"; whether the infringer "relied on legal advice"; and "any other factors tending to show good faith" by the infringer. *SRI Int'l, Inc. v. Advanced Tech. Labs., Inc.*, 127 F.3d 1462, 1465 (Fed. Cir. 1997).

B. The Federal Circuit's Current Two-Part Test for Evaluating Willfulness Is Fatally Flawed

The Federal Circuit abandoned this flexible approach by adopting the rigid, two-part test first articulated in *Seagate* and further elaborated upon in *Bard*. As explained below, this test is fatally flawed because it is "overly rigid" and too "inflexible" for the discretionary inquiry mandated by § 284. *Octane Fitness*, 134 S. Ct. at 1756-57.

1. The Federal Circuit's Rigid Test for Willfulness Is Similar to the Two-Part Test for Attorney's Fees Rejected in *Octane Fitness*

In *Octane Fitness*, this Court rejected a similar two-part, objective/subjective test for attorney's fees pursuant to § 285 of the Patent Act. *Id.* at 1749. As with willfulness, historically the Federal Circuit

employed a flexible, totality-of-the-circumstances standard for determining eligibility for attorney's fees in patent cases. *Id.* at 1754. Indeed, the Federal Circuit often considered attorney's fees under § 285 hand-in-hand with willful infringement under § 284, affirming fee awards based at least in part on a finding of willfulness. *See, e.g.*, *Kori Corp. v. Wilco Marsh Buggies & Draglines, Inc.*, 761 F.2d 649, 656–57 (Fed. Cir. 1985) (willful infringement found; double damages and attorney fees awarded); *Rosemount, Inc. v. Beckman Instruments, Inc.*, 727 F.2d 1540, 1547–48 (Fed. Cir. 1984) (willful infringement found; treble damages and attorney fees awarded); *see also Imonex Servs., Inc. v. W.H. Munzprufer Dietmar Trenner GmbH*, 408 F.3d 1374, 1378 (Fed. Cir. 2005) ("The criteria for declaring a case exceptional [under § 285] include willful infringement . . .").

In *Brooks Furniture Manufacturing, Inc. v. Dutailier International, Inc.*, 393 F.3d 1378 (Fed. Cir. 2005), however, the Federal Circuit "abandoned that holistic, equitable approach in favor of a more rigid and mechanical formulation" for determining exceptionality under § 285. *Octane Fitness*, 134 S. Ct. at 1754. Specifically, *Brooks Furniture* articulated a two-part test requiring the prevailing party to prove the litigation was both (1) objectively baseless and (2) brought in subjective bad faith. 393 F.3d at 1381. This Court unanimously rejected the *Brooks Furniture* test as "unduly rigid" and "impermissibly encumber[ing] the statutory grant of discretion" by dramatically circumscribing the district court's discretion for awarding attorney's fees. *Octane Fitness*, 134 S. Ct. at 1755.

Here, the Federal Circuit similarly erred in adopting a rigid, two-part, objective/subjective test for determining willfulness under § 284. Indeed, the Federal Circuit itself has declared that the two-part test for "objective baselessness . . . under *Brooks Furniture* is identical to the objective recklessness standard . for § 284 willful infringement actions under [*Seagate*]." *iLOR, LLC v. Google, Inc.*, 631 F.3d 1372, 1377 (Fed. Cir. 2011). It has also emphasized that, like *Brooks Furniture*, evidence of the infringer's state of mind "is irrelevant to the objective baselessness inquiry" required by the first part of the test. *iLOR*, 631 F.3d at 1377-78. And like *Brooks Furniture*, this inflexible approach is contrary to the statutory language of § 284, which allocates significant discretion to the trial court. *Compare* 35 U.S.C. § 284 ("[T]he court *may* increase damages up to three times the amount found or assessed." (emphasis added)), *with id.* § 285 ("The court in exceptional cases *may* award attorney fees to the prevailing party." (emphasis added)).

2. The Objective Prong Is an Overly Strict Gatekeeper to the Willfulness Inquiry

In addition to its inflexible nature, the objective prong of the two-part test operates as an overly strict gatekeeper to the willfulness inquiry, as many claims of willfulness never proceed beyond this threshold determination.

The Federal Circuit has held that the existence of a "reasonable" or "substantial" but ultimately unsuccessful defense to an infringement claim means the objective prong cannot be satisfied and

thus the willfulness inquiry must be terminated. *See, e.g.*, *Bard Peripheral Vascular, Inc. v. W.L. Gore & Assocs., Inc.*, 776 F.3d 837, 844 (Fed. Cir. 2015) ("Objective recklessness will not be found where the accused infringer has raised a substantial question as to the validity or noninfringement of the patent." (internal quotations and citation omitted)); *Spine Sols., Inc. v. Medtronic Sofamor Danek USA, Inc.*, 620 F.3d 1305, 1319 (Fed. Cir. 2010) ("Th[e] 'objective' prong of *Seagate* tends not to be met where an accused infringer relies on a reasonable defense to a charge of infringement."). This extends not just to potential defenses known to the infringer prior to engaging in infringing conduct (such as those developed in an opinion of counsel), but to defenses first discovered during the pendency of litigation as well. *See, e.g.*, *Carnegie Mellon Univ. v. Marvell Tech. Grp., Ltd.*, No. 2014-1492, 2015 WL 4639309, at *14 (Fed. Cir. Aug. 4, 2015) ("[W]e have repeatedly assessed [the] objective reasonableness of a defense without requiring that the litigation had the defense in mind before the litigation."), *petition for reh'g en banc held in abeyance*, 805 F.3d 1382 (Fed. Cir. Nov. 17, 2015) (per curiam); *Glob. Traffic Techs. LLC v. Morgan*, No. 2014-1537, 2015 WL 3513416, at *7 (Fed. Cir. June 4, 2015) (explaining the objective prong "requires analysis of all of the infringer's non-infringement and invalidity defenses, even if those defenses were developed for litigation"); *see also Halo Elecs., Inc. v. Pulse Elecs., Inc.*, 769 F.3d 1371, 1381–83 (Fed. Cir. 2014).

As a result, willfulness often "turns not on an evaluation of the risk of infringement at the time the infringement occurred, but on a post-hoc analysis of

whether or not an omniscient accused infringer would have recognized it had a viable defense." Jason Rantanen, *An Objective View of Fault in Patent Infringement*, 60 Am. U. L. Rev. 1575, 1628-29 (2011). Because skilled litigation counsel can usually articulate at least one reasonable defense to an infringement claim,[9] the Federal Circuit's omniscient view of objective reasonableness sets a high bar. Indeed, one empirical study of district court decisions on willfulness after *Seagate* found that the existence of a "substantial" or "legitimate" defense was "the single best way to defeat a willfulness claim." *See* Christopher B. Seaman, *Willful Patent Infringement and Enhanced Damages After* In re Seagate*: An Empirical Study*, 97 Iowa L. Rev. 417, 452 tbl.5, 457 (2012).

The Federal Circuit also has held that the objective prong must be proven by "clear and convincing evidence," *Seagate*, 497 F.3d at 1371, even though this is an evidentiary standard that "applies to questions of fact and not to questions of

---

[9] In addition to non-infringement, the most common defenses raised in patent litigation are lack of patentable subject matter, anticipation/lack of novelty, obviousness, indefiniteness, lack of enablement, and inadequate written description. *See* John R. Allison, Mark A. Lemley & David L. Schwartz, *Understanding the Realities of Modern Patent Litigation*, 92 Tex. L. Rev. 1769, 1785 tbl.2 (2014). Other potential defenses include inequitable conduct, laches, equitable estoppel, contractual estoppel, license, co-ownership, patent misuse, sovereign immunity, the reverse doctrine of equivalents, and prior commercial use. *See Patent Litigation Strategies Handbook* 1282-87, 1294-1322 (Barry L. Grossman & Gary M. Hoffman eds., 3d ed. 2010).

law," *Microsoft Corp.*, 131 S. Ct. at 2253 (Breyer, J., concurring) (citing *Addington v. Texas*, 441 U.S. 418, 423 (1979)), thus further raising the bar for satisfying this requirement. In addition, the Federal Circuit's reclassification of the first part of the willfulness inquiry as a question of law, *see Bard*, 682 F.3d at 1007, grants it *de novo* review over this issue, which it has repeatedly used to overturn findings of willfulness on appeal. *See, e.g., Carnegie Mellon Univ.*, 2015 WL 4639309, at *12-15; *Glob. Traffic Techs. LLC*, 2015 WL 3513416, at *8; *Innovention Toys, LLC v. MGA Entm't, Inc.*, 611 F. App'x 693, 700-01 (Fed. Cir. 2015); *Stryker Corp. v. Zimmer, Inc.*, 782 F.3d 649, 660-62 (Fed. Cir. 2015); *Univ. of Pittsburgh v. Varian Med. Sys., Inc.*, 561 F. App'x 934, 943-45 (Fed. Cir. 2014); *Lee v. Mike's Novelties, Inc.*, 543 F. App'x 1010, 1016-17 (Fed. Cir. 2013); *Harris Corp. v. Fed. Express Corp.*, 502 F App'x 957, 969 (Fed. Cir. 2013); *Bard*, 682 F.3d at 1005-08; *Spine Sols., Inc.*, 620 F.3d at 1320. In sum, the Federal Circuit's application of the objective prong of *Seagate* has effectively elevated a single factor—the existence of a reasonable litigation defense to infringement—and made it dispositive of the entire willfulness inquiry in most cases.

3. The Federal Circuit's Erroneous Two-Part Test Often Excludes Key Evidence Regarding an Infringer's State of Mind

The Federal Circuit's two-part test for willfulness is further flawed because it prohibits consideration of the infringer's state of mind until (and unless) the objective prong is deemed satisfied.

Under the current standard, "the state of mind of the accused infringer is not relevant" to determining objective reasonableness. *Seagate*, 497 F.3d at 1371; *see also Powell v. Home Depot U.S.A., Inc.*, 663 F.3d 1221, 1236 (Fed. Cir. 2011) ("Should the court determine that the infringer's reliance on a defense was not objectively reckless, it cannot send the question of willfulness to the jury, since proving the objective prong is a predicate to consideration of the subjective prong.").

By artificially bifurcating the willfulness inquiry into separate objective and subjective prongs evaluated by different decisionmakers (judge and jury, respectively), the Federal Circuit's rigid two-part test often precludes consideration of highly probative evidence regarding the infringer's intent, such as copying.[10] For example, in *DePuy Spine, Inc. v. Medtronic Sofamor Danek, Inc.*, 567 F.3d 1314 (Fed. Cir. 2009), the patentee argued that the infringer had knowingly copied its patented invention and that this was material evidence of willfulness. *Id.* at 1336. The Federal Circuit rejected

---

[10] Empirical studies have found a strong relationship between evidence of copying and willful infringement. *See* Christopher A. Cotropia & Mark A. Lemley, *Copying in Patent Law*, 87 N.C. L. Rev. 1421, 1455 (2009) (finding in study of district court decisions involving willfulness from January 2006 through February 2008 that "successful proof of copying overwhelmingly leads to a finding of willfulness"); Seaman, *supra*, at 458 (finding in study of district court decisions on willfulness from *Seagate* through August 2010 that willfulness was found 63% of the time when the patentee offered evidence of copying by the accused infringer, compared to 29% of the time when no evidence of copying existed).

this claim, concluding that evidence of copying was "not relevant to the objective inquiry under *Seagate*'s first prong." *Id.*; *see also id.* at 1337 (holding that "DePuy's arguments concerning 'copying' . . . are relevant only to Medtronic's mental state regarding its direct infringement under *Seagate*'s second prong"). And because it found that the patentee had articulated a substantial (but losing) defense of non-infringement under the doctrine of equivalents, it affirmed the district court's grant of judgment as a matter of law that overturned the jury's finding of willfulness. *Id.* at 1335-37.

In contrast, pre-*Seagate* case law frequently relied on a finding of copying to support willfulness. *See, e.g.*, *Stryker Corp. v. Intermedics Orthopedics, Inc.*, 96 F.3d 1409, 1414 (Fed. Cir. 1996) (affirming finding of willful infringement based in part on evidence that the infringer had "deliberately copied the ideas or design of the [asserted] patent"); *Milgo Elec. Corp. v. United Bus. Commc'ns, Inc.*, 623 F.2d 645, 666 (10th Cir. 1980) ("Many courts have held that faithful copying of a patented product shows an intentional disregard for the patent owner's rights and supports an award of increased damages under [§ 284]."). Indeed, some scholars have argued that the purpose of willfulness is to deter intentional copying. *See, e.g.*, Lemley & Tangri, *supra*, at 1118 ("Willfulness law is designed to deter unscrupulous copyists from taking advantage of the patent disclosure in order to copy the patentee's invention and rush it to market."). And evidence of copying is relevant to other issues of liability, such as inducement of infringement. *See Global-Tech Appliances, Inc. v. SEB S.A.*, 131 S. Ct. 2060, 2071

(2011). In short, it inconsistent with the flexible inquiry mandated by § 284 to decide the issue of willfulness without considering evidence regarding the infringer's state of mind.

III. Willfulness Should Be Determined Under the Totality of the Circumstances

In lieu of the rigid, two-part test articulated by the Federal Circuit in *Seagate* and its progeny, this Court should conclude the correct test for willfulness is a determination that the infringer has at least recklessly violated the patentee's rights under a totality of the circumstances.[11] This approach is faithful to both the text of § 284 and historical practice. On appeal, the lower court's decision should be reviewed for abuse of discretion. Finally, a totality-of-the-circumstances approach to willfulness will not result in a parade of horribles, such as jeopardizing attorney-client privilege or a dramatic increase in treble damage awards.

A. The Statutory Text and Historical Practice Favor a Totality-of-the-Circumstances Approach

This Court should hold that willfulness should be determined under the totality of the circumstances. As previously explained, since 1836, patent law has granted discretion to the trial court whether and how much to increase damages due to willfulness.

---

[11] In *amici*'s view, reckless violations of a patentee's rights would include, *inter alia*, knowing and intentional infringement.

See supra pp. 3-16. The current version of the increased damages provision, § 284, similarly grants discretion by stating that "the court *may* increase the damages up to three times the amount found or assessed." 35 U.S.C. § 284 (emphasis added). Use of "'the word 'may' clearly connotes discretion.'" *Martin v. Franklin Capital Corp.*, 546 U.S. 132, 136 (2005) (quoting *Fogerty*, 510 U.S. at 533). The only textual limitation on the trial court's discretion is that increased damages "shall not apply to provisional rights under [§] 154(d)." 35 U.S.C. § 284.

In *Octane Fitness*, this Court interpreted similar discretionary language in § 285 to require that district courts apply a "totality of the circumstances" test in determining whether a case is "exceptional." *Octane Fitness*, 134 S. Ct. at 1756. A similar construction should apply to § 284, particularly since both statutory provisions serve a common objective—the deterrence of willful infringement. *See Mathis v. Spears*, 857 F.2d 749, 754 (Fed. Cir. 1988) ("Provisions for increased damages under 35 U.S.C. § 284 and attorney fees under 35 U.S.C. § 285 are available as deterrents to blatant, blind, willful infringement of valid patents."); *see also Knorr-Bremse*, 383 F.3d at 1343 (stating that the "[r]emedy for willful infringement is founded on 35 U.S.C. § 284 and 35 U.S.C. § 285").

A totality-of-the-circumstances test for determining willfulness also is consistent with prior case law. As previously discussed, courts routinely considered the totality of the circumstances in adjudging willfulness pre-*Seagate*. *Supra* pp. 16, 18-19.

B. The District Court's Decision Should Be Reviewed for Abuse of Discretion on Appeal

In addition, the Court should conclude that the district court's decision regarding increased damages for willfulness should be evaluated for abuse of discretion on appeal, rather than *de novo* review. As discussed above, the statutory text of § 284 grants discretion to the district court regarding whether to increase damages for willfulness. In *Highmark Inc. v. Allcare Health Management System, Inc.*, 134 S. Ct. 1744 (2014)—decided the same day as *Octane Fitness*—the Court held that similar discretionary language in § 285 should be "reviewed on appeal for abuse of discretion." *Id.* at 1748. Like in *Highmark*, the text of § 284 "'emphasizes the fact that the determination is for the district court,' which 'suggests some deference to the district court upon appeal.'" *Id.* (quoting *Pierce v. Underwood*, 487 U.S. 552, 599 (1988)).

A deferential standard of review on appeal also makes logical sense in light of the highly fact-specific nature of the willfulness inquiry. As the Federal Circuit explained pre-*Seagate*, willfulness is primarily "a question of fact, for it includes elements of intent, reasonableness, and belief" that are particularly within the province of the trial court. *Pall Corp.*, 66 F.3d at 1221; *see also SRI Int'l, Inc.*, 127 F.3d at 1465 ("Since the issue of willfulness not only raises issues of reasonableness and prudence, but is often accompanied by questions of intent, belief, and credibility, appellate review requires appropriate deference to the special role of the trial

court in making such determinations."). In addition, this Court has held that punitive damages should be reviewed under an abuse-of-discretion standard on appeal "[i]f no constitutional issue is raised," such as when the relevant statute "place[s] limits on the permissible size" of such awards. *Cooper Indus., Inc. v. Leatherman Tool Grp., Inc.*, 532 U.S. 424, 433 (2001). As a result, "an appellate court should apply an abuse-of-discretion standard in reviewing all aspects of a district court's" § 284 determination. *Highmark*, 134 S. Ct. at 1749.

C. A Totality-of-the-Circumstances Test Will Not Adversely Impact Attorney-Client Privilege

One potential concern regarding a totality-of-the-circumstances test is that it may adversely impact attorney-client privilege by coercing accused infringers to obtain and disclose an opinion of counsel to defend against willfulness, thus waiving the privilege. *See, e.g.*, William F. Lee & Lawrence P. Cogswell, III, *Understanding and Addressing the Unfair Dilemma Created by the Doctrine of Willful Patent Infringement*, 41 Hous. L. Rev. 393, 433-34 (2004) (labelling the "infringer's dilemma" the choice "to invoke the advice-of-counsel defense, thereby waiving privilege or immunity or both, or choose not to produce an opinion letter, thereby maintaining a full panoply of privileges and immunities"). But this is not likely to occur for at least three reasons.

First, in *Knorr-Bremse*, the Federal Circuit rejected the so-called "adverse inference" rule, which previously permitted the decisionmaker on willfulness to make an adverse inference of

culpability based on an accused infringer's failure to obtain or offer an opinion of counsel in its defense at trial. 383 F.3d at 1344-46. This holding was subsequently codified by Congress. *See* 35 U.S.C. § 298.[12] As a result, an accused infringer's decision to maintain privilege and not offer an opinion of counsel cannot be used against it, even under a totality-of-the-circumstances approach.

Second, in *Seagate*, the Federal Circuit held that any waiver of attorney-client privilege (as well as work product protection) due to disclosure of an opinion of counsel ordinarily will not extend to trial counsel. 497 F.3d at 1373-74. This remains good law even if *Seagate*'s rigid two-part test is overturned by this Court.

Third, despite the "widespread perception that opinions of counsel remain a strong defense against willfulness charges," empirical evidence rebuts this claim. Seaman, *supra*, at 454. One study of district court decisions in the three years following *Seagate* found nearly identical rates of willful infringement findings in cases where infringers offered an opinion of counsel and in cases they did not. *Id.* As a result, the incentive of accused infringers to disclose an opinion of counsel is much weakened.

---

[12] This provision is effective for all patent litigation that commenced on or after January 14, 2013. Leahy-Smith America Invents Act Technical Corrections § 1(a), Pub. L. No. 112-274, 126 Stat. 2456, 2456 (2013).

D. A Totality-of-the-Circumstances Test Will Not Result in a Dramatic Increase in Treble Damage Awards

Finally, a totality-of-the-circumstances approach for determining willfulness will not lead to a dramatic increase in treble damage awards. First, even if the rigid, two-part test announced in *Seagate* is replaced with a totality-of-the-circumstances inquiry, the underlying requirement for increasing damages under § 284—willfulness—remains intact. As this Court has held in other civil contexts, a showing of at least reckless misconduct is required to establish willfulness. *See, e.g.*, *Safeco Ins. Co. of Am. v. Burr*, 551 U.S. 47, 57 (2007) (concluding that the "standard civil usage" of "willful" under the Fair Credit Reporting Act includes reckless violations); *McLaughlin v. Richland Shoe Co.*, 486 U.S. 128, 132-33 (1988) (concluding that willful violations of the Fair Labor Standards Act include reckless violations). As a result, lower courts cannot return to a negligence-like standard for awarding increased damages. *See Seagate*, 497 F.3d at 1370-71.

Second, even if willfulness is established, the district court retains discretion whether to increase damages and how much damages should be increased, up to the statutory maximum of treble damages. *See* 35 U.S.C. § 284 (stating that "the court may increase the damages *up to* three times the amount found or assessed" (emphasis added)); *see also Read Corp. v. Portec, Inc.*, 970 F.2d 816, 826 (Fed. Cir. 1992) ("An award of enhanced damages for infringement, as well as the extent of the enhancement, is committed to the discretion of the

trial court."). Empirical studies have found that even when a district court decides to increase damages for willfulness under § 284, it awards the maximum of triple damages substantially less than half of the time. *See* Kimberly A. Moore, *Judges, Juries, and Patent Cases—An Empirical Peek Inside the Black Box*, 99 Mich. L. Rev. 365, 367, 394 (2000) (finding in study of all patent cases that went to trial from 1983-1999 that damages were tripled only 35% of the time when the district court increased damages under § 284 and the average enhancement was less than double damages); Seaman, *supra*, at 469 (finding in study of district court decisions from September 2004 through July 2010 that over 70% of increased damages awards under § 284 were for double damages or less). This suggests that triple damages are generally awarded only in egregious cases of willfulness. *See Read Corp.*, 970 F.2d at 826 ("The paramount determination in deciding to grant enhancement and the amount thereof is the egregiousness of the defendant's conduct based on all the facts and circumstances.").

CONCLUSION

For the foregoing reasons, this Court should reverse the Federal Circuit in both cases on the issue of willfulness, hold that the appropriate standard under § 284 is a showing that the infringer willfully infringed under the totality of the circumstances and that this determination is to be reviewed for abuse of discretion on appeal, and remand to the district court for proceedings consistent with this Court's opinion.

Respectfully submitted,

CHRISTOPHER B. SEAMAN
Counsel of Record
Washington and Lee
University School of Law
1 Denny Circle
Lexington, VA 24450
seamanc@wlu.edu
(540) 458-8520

JASON RANTANEN
University of Iowa
College of Law
280 Boyd Law Building
Melrose & Byington
Iowa City, IA 52232
jason-rantanen@uiowa.edu
(319) 335-9034

APPENDIX – LIST OF SIGNATORIES*

Timothy R. Holbrook
Professor of Law
Emory University School of Law

Jason Rantanen
Associate Professor of Law
University of Iowa College of Law

Christopher B. Seaman
Associate Professor of Law
Washington and Lee University School of Law

---

* The views expressed in this brief are those of the individual signatories and not those of the institutions with which they are affiliated.

Nos. 14-1513, 14-1520

IN THE

Supreme Court of the United States

HALO ELECTRONICS, INC.,

Petitioner,

v.

PULSE ELECTRONICS, INC. *et al.*,

Respondents,

and

STRYKER CORPORATION, *et al.*,

Petitioners,

v.

ZIMMER, INC. *et al.*,

Respondents.

ON WRITS OF CERTIORARI TO THE UNITED STATES COURT OF APPEALS FOR THE FEDERAL CIRCUIT

BRIEF OF *AMICI CURIAE* INTERNET COMPANIES IN SUPPORT OF RESPONDENTS

MARK A. LEMLEY
Counsel of Record
DARALYN J. DURIE
CLEMENT S. ROBERTS
MICHAEL A. FELDMAN
DURIE TANGRI LLP
217 Leidesdorff Street
San Francisco, CA 94111
(415) 362-6666
mlemley@durietangri.com

Counsel for Amici Curiae

263728

TABLE OF CONTENTS

Page

TABLE OF CONTENTS i

TABLE OF CITED AUTHORITIES iii

INTEREST OF *AMICI CURIAE* 1

SUMMARY OF THE ARGUMENT 1

ARGUMENT 4

I. Punitive Damages Under Section 284 Should Be Used Only to Deter Willful Misconduct. 4

II. Patentees Abuse the Current Willfulness Doctrine 7

III. A Lax Treble Damages Doctrine Creates Unnecessary Drag on Innovating Companies 13

A. Overly Strict Willfulness Law Encourages Companies to Avoid Learning About Patented Innovations 13

B. Overly Strict Willfulness Law Hinders Collaboration 15

Table of Contents

Page

IV. This Court Should Make the Standard for Awarding Treble Damages More Stringent, Not Less 17

CONCLUSION 19

TABLE OF CITED AUTHORITIES

Page

Cases

Aro Mfg. Co. v. Convertible Top Replacement Co.,
377 U.S. 476, 84 S. Ct. 1526 (1964) 4

Avia Group Int'l, Inc. v. L.A. Gear, Cal., Inc.,
853 F.2d 1557, 7 U.S.P.Q.2d (BNA) 1548
(Fed. Cir. 1988) 4

Brookville Equip. Corp. v. A.L. Lee Corp.,
No. 13CV0059, 2013 WL 1195116
(W.D. Pa. Mar. 22, 2013) 9

Commil USA, LLC v. Cisco Sys., Inc.,
135 S. Ct. 1920, 191 L. Ed. 2d 883 (2015) 4

Creagmile v. John Bean Mfg. Co.,
32 F. Supp. 646, 45 U.S.P.Q. (BNA) 26
(S.D. Cal. 1940) 5

Creative Internet Adver. Corp. v. Yahoo! Inc.,
No. 6:07cv354, 2009 WL 2382132
(E.D. Tex. July 30, 2009) 8

Day v. Woodworth,
54 U.S. (13 How.) 363, 14 L. Ed. 181 (1851) 4

Egyptian Goddess, Inc. v. Swisa, Inc.,
543 F.3d 665, 88 U.S.P.Q.2d (BNA) 1658
(Fed. Cir. 2008) 4

Cited Authorities

Page

Festo Corp. v.
Shoketsu Kinzoku Kogyo Kabushiki Co.,
535 U.S. 722, 122 S. Ct. 1831 (2002).....15

Finjan Software, Ltd. v.
Secure Computing Corp.,
C.A. No. 06-369, 2009 WL 2524495
(D. Del. Aug. 18, 2009).....8

Global-Tech Appliances, Inc. v. SEB S.A.,
131 S. Ct. 2060, 179 L. Ed. 2d 1167 (2011).....18

In re Seagate Tech., LLC,
497 F.3d 1360, 83 U.S.P.Q.2d (BNA) 1865
(Fed. Cir. 2007)..... *passim*

Innovative Therapies, Inc. v.
Kinetic Concepts, Inc.,
599 F.3d 1377, 94 U.S.P.Q.2d (BNA) 1307
(Fed. Cir. 2010).....10

MedImmune, Inc. v. Genentech, Inc.,
549 U.S. 118, 127 S. Ct. 764 (2007).....10

Microsoft Corp. v. i4i Ltd. P'ship,
131 S. Ct. 2238, 180 L. Ed. 2d 131 (2011).....5-6

Radio Sys. Corp. v. Accession, Inc.,
638 F.3d 785, 98 U.S.P.Q.2d (BNA) 1485
(Fed. Cir. 2011).....10

Cited Authorities

Page

Reed Roller Bit Co. v. Hughes Tool Co.,
12 F.2d 207 (5th Cir. 1926) 5

Scholle Corp. v. Blackhawk Molding Co.,
133 F.3d 1469, 45 U.S.P.Q.2d (BNA) 1468
(Fed. Cir. 1998) 10

Seymour v. McCormick,
57 U.S. (16 How.) 480, 14 L. Ed. 1024 (1853).....5

Slimfold Mfg. Co. v. Kinkead Indus., Inc.,
932 F.2d 1453 (Fed. Cir. 1991).....16

State Indus. v. A.O. Smith Corp.,
751 F.2d 1226 (Fed. Cir. 1985) 16

Underwater Devices Inc. v.
Morrison-Knudsen Co.,
717 F.2d 1380, 219 U.S.P.Q. (BNA) 569
(Fed. Cir. 1983).....7

Walker Process Equip., Inc. v.
Food Mach. & Chem. Corp.,
382 U.S. 172, 86 S. Ct. 347 (1965).....5

Statutes

35 U.S.C. § 100.....6

35 U.S.C. § 271.....12

Cited Authorities

Page

35 U.S.C. § 284 ..... 1, 4, 6

35 U.S.C. § 298 ..... 6, 7

35 U.S.C. § 311 11

Other Authorities

U.S. Const. art. I, § 8, cl. 8 ..... 3, 13

The Patent Act of 1952 ..... *passim*

Christopher A. Cotropia & Mark A. Lemley, *Copying in Patent Law*, 87 N.C. L. Rev. 1421 (2009) 8

David Drummond, *When patents attack Android*, Google Blog, (Aug. 3, 2011), https://googleblog.blogspot.com/2011/08/when-patents-attack-android.html 14

Dennis Fernandez, *Move Over Letterman: Top 10 Most Common IP Management Mistakes for New Companies*, Pat. Strategy & Mgmt., July 1, 2003 14

Edwin H. Taylor & Glenn E. Von Tersch, *A Proposal to Shore Up the Foundations of Patent Law that the Underwater Line Eroded*, 20 Hastings Comm. & Ent. L.J. 721 (1998) 14

Cited Authorities

Page

Gideon Mark & Thomas C. Pearson, *Corporate Cooperation during Investigations and Audits*, 13 STAN. J.L. BUS. & FIN. 1 (2007).....9

Joe Mullin, *Reform groups: Bill to stop patent demand letters falls short*, Ars Technica, (Apr. 22, 2015 11:30 AM), http://arstechnica.com/tech-policy/2015/04/reform-groups-bill-to-stop-patent-demand-letters-falls-short/ 12

Kimberly A. Moore, *Empirical Statistics on Willful Patent Infringement*, 14 FED. CIR. B.J. 227 (2004) 8

Mark A. Lemley & Ragesh K. Tangri, *Ending Patent Law's Willfulness Game*, 18 BERKELEY TECH. L.J. 1085 (2003) 11, 13

Matthew D. Powers & Steven C. Carlson, *The Evolution and Impact of the Doctrine of Willful Patent Infringement*, 51 SYRACUSE L. REV. 53 (2001) 5

Paul Shukovsky, *Bill Dubbed 'Patent Troll Prevention Act' Put in Front of Washington State Lawmakers*, BNA (Jan. 28, 2015) 12

Ronald G. Blum & Andrew J. Turro, *The Self-Evaluative Privilege in the Second Circuit: Dead or Alive?*, N.Y. ST. B.J., June 2003.....9

Cited Authorities

Page

Samuel Chase Means, *The Trouble with Treble Damages: Ditching Patent Law's Willful Infringement Doctrine and Enhanced Damages*, 2013 U. ILL. L. REV. 1999 (2013).....14

Rules

Supreme Court Rule 37.6.....1

INTEREST OF *AMICI CURIAE*[1]

Check Point Software Technologies, Inc., LinkedIn Corporation, Mozilla Corporation, Netflix, Inc., Pinterest, Inc., Roku, Inc. and Twitter, Inc. (Amici) are technology and Internet companies. Amici are inventors and patent owners, but they also face suits and threats of suit by patent owners. Amici have no direct stake in the outcome of this case, but have a strong interest in seeing that patent law encourages rather than threatens innovation.

SUMMARY OF THE ARGUMENT

In the 1952 Patent Act, Congress expressly allowed courts to increase damages in certain patent cases. *See* 35 U.S.C. § 284 ("[T]he court may increase the damages up to three times the amount found or assessed."). Courts have appropriately limited the risk of treble damages to instances of willful infringement, offering some protection to innovators, and this Court should not disturb that centuries-old rule.

This Court should, however, revisit the definition of willfulness. The Federal Circuit has set the standard for establishing willfulness so low that it creates an imbalance in the law. On one hand, even trivial knowledge of a patent may be enough to find a company guilty of willful infringement despite the fact that it independently

---

1. Counsel for the parties have consented to the filing of this amicus brief. Pursuant to Rule 37.6, no counsel for either party had any role in authoring this brief in whole or in part, and no party other than the named Amici has made any monetary contribution toward the preparation and submission of this brief.

invented the technology in good faith, with no knowledge of the patent or the patentee. By contrast, the Federal Circuit requires a higher standard to show a real and immediate legal controversy sufficient for a declaratory judgment action to resolve the alleged infringer's risk. There is, therefore, an imbalance between the low level of knowledge sufficient to put a company at risk of incurring treble damages for willful infringement and the comparatively higher level of threat necessary for a company holding an honest belief that it will win in litigation to institute a declaratory judgment action and resolve that risk.

Some patent owners abuse this imbalance. For instance, some potential plaintiffs send tens of thousands of letters informing potential defendants of the existence of a patent without expressly threatening legal action. The patent owners' actions are not enough to subject themselves to declaratory judgment, but are sufficient to threaten defendants with the prospect of treble damages. With minimal effort, patent owners impose extraordinary litigation risks, and its attendant costs, without incurring any meaningful cost or risk to themselves. This uneven landscape makes innovation an uphill legal battle for companies seeking to advance technology while respecting patents.

The result is a perverse set of incentives. A company must either choose to carry the risk of treble damages without the possibility of definitive resolution or else actively shun *any* knowledge of existing patents. Faced with these risks, many companies today choose to counsel their scientists, engineers, and developers *not* to read patents. That may be the rational option for resolving the

risk, but it undercuts a fundamental justification of patent law: that the law bestows exclusive rights to an invention in exchange for disclosing the invention to the public. The imbalance between the treble damages standard and the declaratory judgment standard effectively *discourages* what the Patent Act was intended to *promote*: public exchange and awareness of advances in technology, to "promote the Progress of Science and useful Arts." U.S. Const. art. I, § 8, cl. 8

These perverse incentives also hamper efficient business collaboration. Companies that make the rational choice to advise their employees not to read patents will find it difficult to exchange technology, pool patents, or value patented contributions made by others. And even companies who are willing to risk reading patents will find collaboration difficult if their partners won't do so. As companies that participate in standards organizations, patent pools, and other consortia, we have experienced these problems first-hand.

This Court should limit treble damages to willfulness as that term is traditionally understood in other areas of law—a deliberate decision to violate a patent right or act with willful blindness to that right in producing a new product.

ARGUMENT

I. Punitive Damages Under Section 284 Should Be Used Only to Deter Willful Misconduct.

Patent infringement is a strict-liability offense. *Commil USA, LLC v. Cisco Sys., Inc.*, 135 S. Ct. 1920, 1926, 191 L. Ed. 2d 883 (2015) ("Direct infringement is a strict-liability offense."). Accordingly, the Patent Act does not impose punitive damages for all patent infringement. Rather, under normal circumstances, the Patent Act is designed to *compensate* for any damages infringement causes. *See* 35 U.S.C. § 284 ("[T]he court shall award the claimant damages adequate to compensate for the infringement, ...").

Treble damages under section 284 are a form of punitive damages. *See Avia Group Int'l, Inc. v. L.A. Gear, Cal., Inc.*, 853 F.2d 1557, 1566(Fed. Cir. 1988), *abrogated on other grounds by Egyptian Goddess, Inc. v. Swisa, Inc.*, 543 F.3d 665 (Fed. Cir. 2008). Punitive and treble damages serve a narrower and more specific purpose: to deter undesirable conduct. However, *unintentional* conduct cannot readily be deterred, and certainly not without significantly chilling innovation.

That is why courts—including this Court—have long limited punitive damages to willful or bad-faith conduct. *See, e.g., Aro Mfg. Co. v. Convertible Top Replacement Co.*, 377 U.S. 476, 508, 84 S. Ct. 1526 (1964) ("[A patentee] could in a case of willful or bad-faith infringement recover punitive or 'increased' damages under the statute's trebling provision; . . . ."); *Day v. Woodworth*, 54 U.S. (13 How.) 363, 372, 14 L. Ed. 181 (1851) (patent law allows

increasing damages only "if, in the opinion of the court, the defendant has not acted in good faith, or has been stubbornly litigious, ..."). *Cf. Walker Process Equip., Inc. v. Food Mach. & Chem. Corp.*, 382 U.S. 172, 179, 86 S. Ct. 347 (1965) (Harlan, J., concurring) (finding knowing or willful conduct by patentees a requirement for treble damages under the Sherman and Clayton Acts).

Even before Congress passed the current Patent Act of 1952, various regional circuits had limited punitive patent damages to instances of willfulness. *See, e.g., Creagmile v. John Bean Mfg. Co.*, 32 F. Supp. 646, 648-49 (S.D. Cal. 1940), *rev'd on other grounds*, 123 F.2d 182 (9th Cir. 1941); *Reed Roller Bit Co. v. Hughes Tool Co.*, 12 F.2d 207, 210 (5th Cir. 1926) (upholding enhanced damages based on willful infringement). For decades—if not centuries—Courts have generally applied treble damages for patent infringement only to instances of deliberate, willful misconduct. *See, e.g., Seymour v. McCormick*, 57 U.S. (16 How.) 480, 488-89, 14 L. Ed. 1024 (1853) (describing the "wanton and malicious pirate" as the target of willfulness law and punitive damages under patent law). Indeed, scholars have reviewed the historic evidence in detail and concluded that, before the creation of the Federal Circuit, willful infringement meant deliberate copying, not continued use of an independently created invention. *See* Matthew D. Powers & Steven C. Carlson, *The Evolution and Impact of the Doctrine of Willful Patent Infringement*, 51 SYRACUSE L. REV. 53, 55-79 (2001). When courts have a long-standing interpretation of a statute and Congress reenacts that statute, as it did with the Patent Act of 1952, it is presumed to have acquiesced in that interpretation. *See Microsoft Corp. v. i4i Ltd. P'ship*, 131 S. Ct. 2238, 2245, 180 L. Ed. 2d 131

(2011). At this late date, this Court should not abandon or dilute the role of true willfulness in determining punitive damages.

Moreover, Congress recently passed the America Invents Act, which amended the Patent Act to read:

> The failure of an infringer to obtain the advice of counsel with respect to any allegedly infringed patent, or the failure of the infringer to present such advice to the court or jury, may not be used to prove that the accused infringer willfully infringed the patent or that the infringer intended to induce infringement of the patent.

35 U.S.C. § 298. Since section 298 is the Patent Act's only reference to willful infringement, the fact that Congress created a new limitation on how a patentee can prove willful infringement would make no sense if section 284 were not understood to be about willful infringement. *See generally* 35 U.S.C. §§ 100. A limitation on a method of *proving* willful infringement is only rational if willful infringement is relevant to an element of patent litigation. Because the case law holds willfulness to be a prerequisite for treble damages, section 298 must be further evidence of Congressional acquiescence to the long line of cases limiting treble damages to willfulness.

This Court should confirm that willfulness remains a prerequisite for treble damages and should consider whether the current willfulness standard faithfully serves the purpose of deterring intentional undesirable conduct, or whether it tends to do more harm than good.

II. Patentees Abuse the Current Willfulness Doctrine

Punitive damages are designed to punish, and therefore deter, bad conduct—the willful violation of patent rights. The current willfulness standard allows patent holders to manufacture willfulness where none exists and provides incentives for them to assert willfulness in all cases, regardless of the underlying facts.

Federal Circuit law does not limit treble damages to those who have actually copied a patentee's invention or acted intentionally; it can impose punitive damages on a company that develops an invention *independently* if the patent holder simply notifies that company of the patent. *See In re Seagate Tech., LLC*, 497 F.3d 1360, 1371 (Fed. Cir. 2007) (*en banc*). This is true even if that notice comes long after the allegedly infringing product was designed, developed, tested, marketed, and released. *Id.*

In 1983, the Federal Circuit went as far as to create an affirmative *duty* to obtain an opinion-of-counsel letter when informed of the existence of a patent. *See Underwater Devices Inc. v. Morrison-Knudsen Co.*, 717 F.2d 1380, 1389-90 (Fed. Cir. 1983). Recently, the Federal Circuit overruled *Underwater Devices*, raising the standard for willfulness to "objective recklessness," *In re Seagate Tech., LLC*, 497 F.3d 1360, 1370-72 (Fed. Cir. 2007). Correspondingly, Congress declared that *lack* of an opinion letter cannot be used as affirmative evidence of willfulness. *See* 35 U.S.C. § 298. Nevertheless, the Federal Circuit still does not require that the defendant copied the invention from the plaintiff, or even that the defendant act intentionally. *See In re Seagate Tech., LLC*, 497 F.3d at 1371. If an independent developer

learns of a patent after selling its product for years and does not immediately conduct a thorough litigation-risk investigation, it may be found willful for not immediately halting sales of its product if it ultimately turns out that a post-release investigation would have shown a significant risk of infringement. *Id.* Moreover, despite the nominally stricter standard, the Federal Circuit and lower courts continue to stress the importance of opinions of counsel as part of the "objective assessment" made by businesses. *Id.* at 1371, 1373; *see also Finjan Software, Ltd. v. Secure Computing Corp.*, C.A. No. 06-369, 2009 WL 2524495, at *15 (D. Del. Aug. 18, 2009), *rev'd on other grounds*, 626 F.3d 1197 (Fed. Cir. 2010) ("While there is no longer an affirmative duty of care that requires an accused infringer to obtain an opinion of counsel, the fact that Secure did not seek any such opinion may be considered in the totality of circumstances surrounding willful infringement."); *Creative Internet Adver. Corp. v. Yahoo! Inc.*, No. 6:07cv354, 2009 WL 2382132, at *5 (E.D. Tex. July 30, 2009).

Thus, even under the *Seagate* standard for willfulness, a patent owner can manufacture an allegation of willfulness simply by contacting the potential defendant. That is why an overwhelming majority of complaints (80-90%) allege willfulness, even though only a handful of defendants (barely 10%) are alleged to have copied from patent owners. *See* Christopher A. Cotropia & Mark A. Lemley, *Copying in Patent Law*, 87 N.C. L. REV. 1421, 1442-43 (2009); Kimberly A. Moore, *Empirical Statistics on Willful Patent Infringement*, 14 FED. CIR. B.J. 227, 232 (2004). The "willful" misconduct that gives rise to treble damages, on this theory, is not any intentional act but the failure to immediately stop selling a product when first

contacted by a patentee. All patent holders must do is send a letter with the patent number, and that exposes a company to allegations of willful infringement even if it subjectively believes the patent is invalid or not infringed. *See In re Seagate Tech., LLC*, 497 F.3d at 1371 ("The state of mind of the accused infringer is not relevant to this objective inquiry.").

The effect of a threat of treble damages is not limited to the courtroom. This same letter that threatens punitive damages also triggers a variety of ancillary litigation costs. Patent owners can—and often do—use the threat of treble damages as settlement leverage, even in nuisance-value cases. Even if a company sees a particular case as a mere nuisance, the threat of treble damages is so severe—and the standard so low—it can have a significant impact on settlement negotiations. This is especially true because the manufactured allegations that support a willfulness allegation also make it difficult for a district court to dismiss a case on the pleadings. *See Brookville Equip. Corp. v. A.L. Lee Corp.*, No. 13CV0059, 2013 WL 1195116, at *3 (W.D. Pa. Mar. 22, 2013) ("Willfulness is a fact-intensive issue that is difficult to resolve at the pleading stage." (citation and alteration omitted) (collecting cases)). Moreover, this letter may trigger an internal investigation within the company. Such internal investigations can, alone, be costly, but the cost can often be compounded because the uncertain nature of privilege surrounding internal investigations can lead to costly discovery battles. *See, e.g.*, Gideon Mark & Thomas C. Pearson, *Corporate Cooperation during Investigations and Audits*, 13 STAN. J.L. BUS. & FIN. 1, 25-26 (2007); Ronald G. Blum & Andrew J. Turro, *The Self-Evaluative Privilege in the Second Circuit: Dead or Alive?*, N.Y. ST. B.J., June 2003, at 44, 47.

This letter-notice system of willfulness puts all the risk squarely on the receiving company. The recipient of such a letter is immediately at risk of treble damages but is unable to use the tool Congress established to resolve that kind of risk: a declaratory judgment action.[2] The purpose of the declaratory judgment statute is to prevent precisely this kind of litigation risk, but it fails in these circumstances because of the disparity between the willfulness standard and the declaratory judgment standard. *See Scholle Corp. v. Blackhawk Molding Co.*, 133 F.3d 1469, 1472 n.1 (Fed. Cir. 1998) (holding that a letter asserting a patent, but refusing to take an express stance on infringement is sufficient for willfulness, but not sufficient for declaratory judgment) (collecting cases)).

While this Court in *MedImmune, Inc. v. Genentech, Inc.*, 549 U.S. 118, 127 S. Ct. 764 (2007), sought to make it easier to file a declaratory judgment action by eliminating the "threat of imminent suit" test, subsequent Federal Circuit decisions have in effect reimposed that test, making it impossible for a company that has been put on notice of a patent to sue to clarify its rights. *See, e.g., Innovative Therapies, Inc. v. Kinetic Concepts, Inc.*, 599 F.3d 1377 (Fed. Cir. 2010).[3]

---

2. The Federal Circuit's personal jurisdiction law further slants the litigation landscape against potential defendants. Under Federal Circuit law, a patentee does not subject itself to personal jurisdiction for a declaratory judgment action in a state by sending a cease-and-desist letter to that state, *see Radio Sys. Corp. v. Accession, Inc.*, 638 F.3d 785, 789(Fed. Cir. 2011), making it difficult for out-of-state potential defendants to resolve their risk.

3. Although *inter partes* review proceedings create a means for resolving certain narrow questions of invalidity on prior art grounds, an *inter partes* review cannot address issues of noninfringement,

Without access to declaratory judgment to resolve the risk of potential treble damages, companies must either cease all allegedly infringing activity, even for products years in development or even where the alleged infringement is incidental to the overall product, or take the expensive and time-consuming precaution of arming themselves with the ammunition it takes take to fight the willfulness battle. The common response of hiring lawyers to write opinions of counsel is especially costly. A company must hire different lawyers for the opinion letter and the litigation in order to preserve privilege, *see In re Seagate Tech., LLC*, 497 F.3d at 1374-75, and because the letters themselves (written without the benefit of infringement or claim construction contentions, and usually requiring counsel to speculate as to what may be accused) are often directed to different defenses than those that actually get litigated at trial. These letters are not written to be traditional legal advice, but instead simply serve as a costly way of protecting oneself from the willfulness game. *See* Mark A. Lemley & Ragesh K. Tangri, *Ending Patent Law's Willfulness Game*, 18 BERKELEY TECH. L.J. 1085, 1092-93 (2003).

Two issues make this kind of conduct by patent owners especially problematic.

First, because a demand letter takes only minutes to draft at negligible cost, while each company that receives the letter must spend significant sums in investigation costs, some patent owners have a practice of sending tens of thousands of demand letters on a single patent. *See*

---

indefiniteness, patentable subject matter, or other grounds for invalidity. *See* 35 U.S.C. § 311(b).

Paul Shukovsky, *Bill Dubbed 'Patent Troll Prevention Act' Put in Front of Washington State Lawmakers*, BNA (Jan. 28, 2015), http://www.bna.com/bill-dubbed-patent-n17179922552/ ("[S]mall organizations [may] buy up a patent or two then go send out demand letters to tens of thousands of people asking for a license or settlement that may in fact not be warranted."); Joe Mullin, *Reform groups: Bill to stop patent demand letters falls short*, Ars Technica, (Apr. 22, 2015 11:30 AM), http://arstechnica.com/tech-policy/2015/04/reform-groups-bill-to-stop-patent-demand-letters-falls-short/.

Second, many of these demand letters are not aimed at the developers or manufacturers of the products, but at end consumers. Patent law imposes liability on *users* of patented technology, not just the developers and manufacturers. *See* 35 U.S.C. § 271 ("[W]hoever without authority . . . uses . . . any patented invention, within the United States . . . infringes the patent."). These end users face the same abuses from patent holders, but have no ability to evaluate the claims asserted against them. For instance, an end consumer might purchase a computer chip with no understanding of exactly how the chip operates and no ability to determine how a third-party's confidential and proprietary technology works. Still, if a patentee sends that consumer a letter identifying a patent they allege covers the way the chip operates, that end consumer may be on the hook for treble damages with no means of determining whether or not they infringe.

Because it is easy, cheap, and risk-free for a patent owner to assert willfulness, and because of the tremendous cost and risk a willfulness allegation imposes on potential defendants, the current willfulness and declaratory

judgment law incentivizes patent owners to artificially manufacture allegations of willfulness.

III. A Lax Treble Damages Doctrine Creates Unnecessary Drag on Innovating Companies

Patent law is designed to "promote the Progress of Science and useful Arts." U.S. Const. art. I, § 8, cl. 8. However, the Federal Circuit's current strict interpretation of willfulness actually slows progress both by discouraging research into existing technologies and by making collaboration more difficult.

A. Overly Strict Willfulness Law Encourages Companies to Avoid Learning About Patented Innovations

Because mere awareness of a patent may be enough to subject a company to treble damages for willfulness (as discussed above), in-house counsel has a powerful incentive to advise their employees not to read patents, so as not to get drawn into the willfulness game. *See* Mark A. Lemley & Ragesh K. Tangri, *Ending Patent Law's Willfulness Game*, 18 BERKELEY TECH. L.J. 1085, 1100-102 (2003). Even in the absence of litigation, it can cost tens of thousands of dollars each time any individual engineer or scientist learns about any individual patent. Each time, the company must hire counsel to write an opinion letter for fear that eventual litigation might result in treble damages. That is a rational business decision given the level of risk; tens of thousands of dollars for an opinion letter is a form of insurance against tens—or even hundreds—of millions of dollars in liability for punitive damages.

Yet companies cannot afford to research all patented inventions and obtain an opinion letter for each. There are more than two million patents in force, with 300,000 new ones added every year. In many industries even a single product might be open to patent claims from hundreds of thousands of questionable patents. *See* David Drummond, *When patents attack Android*, Google Blog, (Aug. 3, 2011), https://googleblog.blogspot.com/2011/08/when-patents-attack-android.html ("A smartphone might involve as many as 250,000 (largely questionable) patent claims, and our competitors want to impose a 'tax' for these dubious patents that makes Android devices more expensive for consumers."). Allowing employees to research patents in industries like this might cost the company tens or hundreds of millions of dollars in opinion-of-counsel letters alone. Therefore, the rational decision is frequently to counsel developers and scientists not to read patents at all.

This is not a merely hypothetical concern. In-house intellectual property counsel, including those of *Amici*, regularly give this advice today. *See* Samuel Chase Means, *The Trouble with Treble Damages: Ditching Patent Law's Willful Infringement Doctrine and Enhanced Damages*, 2013 U. ILL. L. REV. 1999, 2012-14 (2013); Dennis Fernandez, *Move Over Letterman: Top 10 Most Common IP Management Mistakes for New Companies*, Pat. Strategy & Mgmt., July 1, 2003, at 3; Edwin H. Taylor & Glenn E. Von Tersch, *A Proposal to Shore Up the Foundations of Patent Law that the Underwater Line Eroded*, 20 HASTINGS COMM. & ENT. L.J. 721, 737, 747 (1998). In other words, sophisticated innovating companies today deliberately avoid contact with existing patents as a direct result of the Federal Circuit's willfulness doctrine.

This defeats one of the fundamental justifications of patent law: that the law bestows exclusive rights to an invention in exchange for disclosing the invention to the public. *See Festo Corp. v. Shoketsu Kinzoku Kogyo Kabushiki Co.*, 535 U.S. 722, 736, 122 S. Ct. 1831 (2002). Today, many patentees obey this tenet in theory, but undermine it in practice. A patentee can publicly disclose an invention through the Patent Office, but threaten to seek treble damages from any company foolish enough to look through their patent portfolio. Whatever innovation patent law was designed to foster by making technological breakthroughs public, current willfulness doctrine undercuts by making it dangerous for innovating companies to consider that public record.

B. Overly Strict Willfulness Law Hinders Collaboration

Some of the most influential innovations come from collaboration between companies. For instance, nearly all standards-setting organizations—including the Moving Picture Experts Group (which created the MPEG standard for video and audio compression) and the Internet Engineering Task Force (which sets the open-source standards for the Internet Protocol)—are collaborative efforts. Current willfulness law not only hinders innovation within a company, it also hinders industry-wide collaboration.

Companies that actively advise employees not to read patents—as discussed in the previous section—maintain that advice in the context of a collaborative effort. But an unwillingness to read patents makes certain technical collaborations more difficult. Companies considering

adopting a new technical standard in a standard-setting organization, or companies considering entering into a joint venture, would like to know whether their collaboration partners hold patents on the technology being considered or even know of relevant patents in the space that may present a risk to the venture. But learning that fact puts them at risk of treble damages. As a result, collaboration partners may delay or even forego collaboration. We have first-hand experience with the difficulties this causes.

Further, collaborating companies must adhere to the "lowest common denominator" risk profile. Thus, even a company willing to read another's patented inventions is effectively prevented from collaborating with many other companies or innovating together with any reference to patents. Some parties require their consortia participants to literally *leave the room* when patent issues arise, so as to avoid any knowledge of the patents altogether. That slows and may even prevent important work on technical standardization—not because companies are seeking to avoid technical development, but precisely because they are doing their best to respect and learn from patents without exposure to treble damages.

Finally, companies might seek to collaborate in order to design around existing patents in order to develop better solutions to existing problems. This is a socially desirable activity. *Slimfold Mfg. Co. v. Kinkead Indus., Inc.*, 932 F.2d 1453, 1457 (Fed. Cir. 1991) (Rich, J.) ("Designing around patents is, in fact, one of the ways in which the patent system works to the advantage of the public in promoting progress in the useful arts, its constitutional purpose."); *State Indus. v. A.O. Smith Corp.*, 751 F.2d 1226, 1236 (Fed. Cir. 1985) ("One of the benefits

of a patent system is its so-called 'negative incentive' to 'design around' a competitor's products, even when they are patented, thus bringing a steady flow of innovations to the marketplace."). However, the current state of willfulness law discourages this kind of development. Designing around existing patents and developing better solutions requires collaborating companies to know the existing solutions. As long as the case law discourages companies from acquiring knowledge of existing solutions, it will also discourage companies from developing better solutions.

IV. This Court Should Make the Standard for Awarding Treble Damages More Stringent, Not Less

Willfulness is the only reasonable basis for imposing treble damages on an infringer. But current willfulness doctrine is subject to abuse and imposes unnecessary costs on innovative companies who are not accused of copying a patent or even being aware of it when they designed and released their products. This Court should not make that problem worse by loosening the reins on willfulness or giving district courts the power to dispense with it altogether. Certainly, this Court should not undo the progress that *In re Seagate* represents in solving the problem of abuse of treble damages. Rather, this Court should rein in willfulness law and the availability of enhanced damages as a whole, making it more difficult for patentees to plead and prove in circumstances where the defendant acted in good faith.

This Court should draw from the meaning of willfulness in other contexts, including other patent law doctrines such as indirect patent infringement, and limit

punitive damages to circumstances in which the defendant acted intentionally—aware of or willfully blind to the likelihood of infringement—at the time it adopted its technology. *Cf. Global-Tech Appliances, Inc. v. SEB S.A.*, 131 S. Ct. 2060, 2068, 179 L. Ed. 2d 1167 (2011) (holding "induced infringement under § 271(b) requires knowledge that the induced acts constitute patent infringement[]" which can include "willful blindness"). A company that adopts a technology knowing that it is copied from another is a bad actor that can be deterred. A company that independently develops technology with no knowledge of the patent is not doing anything wrong. The threat of treble damages will deter the latter company, not from copying, but from innovating at all.

Limiting willful infringement to cases in which a defendant copies the technology or otherwise adopts it with knowledge of the patent is consistent with the definition of willfulness elsewhere in patent law. It will encourage innovation and discourage copying. It will alleviate unnecessary and uneven litigation costs and it will set patent law back on the path towards incentivizing research and discovery rather than discouraging it.

CONCLUSION

This Court should hold that treble damages are appropriate only in cases in which the defendant adopts a technology with knowledge that it is likely infringing a patent.

Respectfully submitted,

MARK A. LEMLEY
Counsel of Record
DARALYN J. DURIE
CLEMENT S. ROBERTS
MICHAEL A. FELDMAN
DURIE TANGRI LLP
217 Leidesdorff Street
San Francisco, CA 94111
(415) 362-6666
mlemley@durietangri.com

Counsel for Amici Curiae

Supreme Court, U.S.
FILED
DEC 16 2015
OFFICE OF THE CLERK

Nos. 14-1513, 14-1520

Supreme Court of the United States

HALO ELECTRONICS, INC.,
Petitioner,

v.

PULSE ELECTRONICS, INC., PULSE ELECTRONICS CORP.,
Respondents.

STRYKER CORPORATION, STRYKER PUERTO RICO, LTD., AND STRYKER SALES CORPORATION,
Petitioners,

v.

ZIMMER, INC. AND ZIMMER SURGICAL, INC.,
Respondents.

ON WRITS OF CERTIORARI TO THE UNITED STATES COURT OF APPEALS FOR THE FEDERAL CIRCUIT

BRIEF OF AMICUS CURIAE LICENSING EXECUTIVES SOCIETY (U.S.A. AND CANADA), INC. IN SUPPORT OF NO PARTY

DANIEL S. STRINGFIELD
Counsel of Record
STEPTOE & JOHNSON LLP
115 S. LaSalle, Suite 3100
Chicago, Illinois 60603
312.577.1300
dstringfield@steptoe.com

Counsel for Amicus Curiae Licensing Executives Society

DECEMBER 16, 2015

TABLE OF CONTENTS

INTEREST OF *AMICUS CURIAE* 1

SUMMARY OF ARGUMENT 2

ARGUMENT 4

I. BRIEF BACKGROUND ON THE VALUE OF PATENTS AND PATENT LICENSING 4

II. ENHANCEMENT OF DAMAGES UNDER THE CURRENT FRAMEWORK 7

A. The *Seagate* Enhanced Damages Test and *De Novo* Standard of Review 7

B. Empirical Evidence Suggests that Enhanced Damages Are More Difficult to Attain Under the Current Framework 9

1. Evidence Shows that Enhanced Damages are Less Likely to be Awarded Under the *Seagate* "Objective Recklessness" Standard 9

2. Evidence Also Suggests that the *De Novo* Standard of Review Makes Enhanced Damages More Difficult to Maintain on Appeal 13

III. AFFIRMING THE *SEAGATE* ENHANCED DAMAGES FRAMEWORK MIGHT ENCOURAGE PREDICTABLE AND CONSISTENT RESULTS 15

TABLE OF CONTENTS—Continued

A. Implementers of Technology Might be Able to Operate More Efficiently Under the Current *Seagate* Standard 16

B. Through Increased Consistency Amongst the District Courts, the Current Framework May Dissuade Forum Shopping 21

IV. CREATING A MORE FLEXIBLE AND DEFERENTIAL ENHANCED DAMAGES FRAMEWORK MIGHT DETER UNDESIRABLE BEHAVIOR AND BETTER PROTECT INVENTIONS 24

A. Making Enhanced Damages More Attainable Might Increase their Deterrent Effect 24

B. Inventions Might Be Better Protected Under a Stronger Enhanced Damages Framework 30

CONCLUSION 33

TABLE OF AUTHORITIES

Page(s)

CASES

Aro Mfg. Co. v. Convertible Top Replacement Co.,
377 U.S. 476 (1964) 7, 23

Bard Peripheral Vascular, Inc. v. W.L. Gore & Associates, Inc.,
682 F.3d 1003 (Fed. Cir. 2012) 9, 15, 22

Georgia-Pacific Corp. v. United States Plywood Corp.,
318 F. Supp. 1116 (S.D.N.Y. 1970) 31

Halo Elecs., Inc. v. Pulse Elecs., Inc.,
780 F.3d 1357 (Fed. Cir. 2015) 28

In re EchoStar Commc'ns Corp.,
448 F.3d 1294 (Fed. Cir. 2006) 16

In re Seagate Tech., LLC,
497 F.3d 1360 (Fed. Cir. 2007) (*en banc*) .... *passim*

Knorr-Bremse Systeme Fuer Nutzfahrzeuge GmbH v. Dana Corp.,
383 F.3d 1337 (Fed. Cir. 2004) (*en banc*) .... *passim*

Panduit Corp. v. Stahlin Bros. Fibre Works, Inc.,
575 F.2d 1152 (6th Cir. 1978) 32

Quantum Corp. v. Tandon Corp.,
940 F.2d 642 (Fed. Cir. 1991) 17

Rite-Hite Corp. v. Kelley Co.,
819 F.2d 1120 (Fed. Cir. 1987) 24

TABLE OF AUTHORITIES—Continued

Safeco Ins. Co. of Am. v. Burr,
551 U.S. 47 (2007) 8

Underwater Devices Inc. v. Morrison-Knudsen Co.,
717 F.2d 1380 (Fed. Cir. 1983) ..... *passim*

Wellman, Inc. v. Eastman Chem. Co.,
642 F. 3d 1355 (Fed. Cir. 2011) 32

CONSTITUTION

U.S. Const., art. I, § 8, cl. 8 5

STATUTES

35 U.S.C. § 271. 5

35 U.S.C. § 282 30

35 U.S.C. § 284 ..... *passim*

35 U.S.C. § 298 19

LEGISLATIVE MATERIALS

H.R. Rep. No. 97-312 (1981) 22-23

STRONG Patents Act of 2015, S632, 114th Cong.
(2015) 5

ARTICLES AND OTHER AUTHORITIES

AIPLA Report of the Economic Survey (2015) 31

AUTM, Highlights of AUTM's U.S. Licensing
Activity Survey, *available at*
http://www.autm.net. 6

TABLE OF AUTHORITIES—Continued

Christopher B. Seaman, *Willful Patent Infringement and Enhanced Damages After In re Seagate: An Empirical Study*,
97 Iowa L. Rev. 417 (2012) ..... *passim*

FTC, *To Promote Innovation: The Proper Balance of Competition and Patent Law and Policy*, (2003) 18

Kimberly A. Moore, *Empirical Statistics on Willful Patent Infringement*,
14 Fed. Cir. B.J. 227 (2004) ..... *passim*

Kimberly A. Moore, *Forum Shopping in Patent Cases: Does Geographic Choice Affect Innovation?*,
79 N.C. L. Rev. 889 (2001) 22

Kimberly A. Moore, *Judges, Juries, and Patent Cases—An Empirical Peek Inside the Black Box*,
99 MICH. L. REV. 365 (2000) 10, 14, 21

Scott Baker, *Can the Courts Rescue Us from the Patent Crisis?*, 88 Tex. L. Rev. 593 (2010) 20

Terry Ludlow, *Trends In Technology IP Licensing*,
IPO Law J., Dec. 10, 2014, *available at*
http://www.ipo.org 6

Writings of Thomas Jefferson
(H. Washington ed. 1871). 5

INTEREST OF *AMICUS CURIAE*

The Licensing Executives Society (U.S.A. and Canada), Inc. ("LES") is the global leader in the business applications of intellectual property ("IP") rights and their management, and it is devoted to standards development, education, and certification.[1] It is an independent, non-profit, professional society that promotes best practices in IP transactions, IP protection, and IP strategy. LES counts among its members lawyers as well as experts in the IP strategy, business management, accounting, business development, supplier management, program management, sales, marketing, and IP valuation fields. Among these are representatives of innovation oriented companies from all business

---

[1] In accordance with Supreme Court Rule 37.6, LES states that this brief was not authored in whole or in part by counsel to a party, and that no monetary contribution to the preparation or submission of this brief was made by any person or entity other than LES and its counsel. Specifically, after reasonable investigation, LES believes that (i) no member of its Board or Amicus Committee who voted to file this brief, or any attorney in the law firm or corporation of such a member, represents a party to this litigation in this matter; (ii) no representative of any party to this litigation participated in the authorship of this brief; and (iii) no one other than LES, or its members who authored this brief and their law firms or employers, made a monetary contribution to the preparation or submission of this brief. Pursuant to Supreme Court Rule 37.3, Petitioners in both Case No. 14-1513 and Case No. 14-1520, as well as Respondents in Case No. 14-1513, have consented to this filing. Consent from Respondents in Case No. 14-1520 is submitted herewith.

sectors, government agencies, and university labs. LES is a community of approximately 4,000 IP management professionals, and it is part of a world-wide network (LES International or "LESI") of more than 9,000 IP management practitioners in 32 sister societies.

SUMMARY OF ARGUMENT

Before this Court are two consolidated cases, *Halo Electronics, Inc. v. Pulse Electronics, Inc.*, S.Ct. No. 14-1513 and *Stryker Corp. v. Zimmer, Inc.*, S.Ct. No. 14-1520, addressing the Federal Circuit's two-part *Seagate* test for, and *de novo* standard of review of, awards of enhanced damages under 35 U.S.C. § 284.

In their respective petitions for writ of certiorari, the Petitioners in these consolidated cases ask this Court to reject the current *Seagate* framework and *de novo* standard of review as contrary to legislative intent and inconsistent with this Court's precedent, particularly this Court's recent *Octane* and *Highmark* decisions. Petitioners assert that under the *Seagate* test, which they characterize as "rigid" and "inflexible," enhanced damages are almost impossible to attain, rendering § 284 superfluous.

In opposition to the petitions, Respondents assert that the current *Seagate* test and review standard are consistent with legislative intent and this Court's precedent. Respondents also argue that changing the standard for enhanced damages would increase variability in willfulness judgments and unfairly

force parties to settle under the threat of enhanced damages.

The parties have sufficiently addressed the legal issues surrounding the continued viability of the *Seagate* test and the appropriate standard of review. As a professional society dedicated to promotion of best practices in IP transactions, IP protection, and IP strategy, *amicus* Licensing Executives Society (U.S.A. and Canada), Inc. ("LES") might be particularly suited to assist the Court with evaluation of the practical impact of its decision in these consolidated cases.

Under an "Affirmed Status Quo" scenario, where the Court affirms the *Seagate* test and *de novo* review standard, the district courts will continue to apply a familiar and structured test, and the Federal Circuit will continue to uniformly review those decisions, sustaining predictability and consistency in this area of law. Parties' behavior and expectations, set by almost a decade of precedent, will remain undisturbed.

However, enhanced damages will remain difficult to attain under the Affirmed Status Quo scenario, potentially making them an unlikely threat to infringers. Knowing this, infringers might be incentivized to ignore or disregard patent rights with the risk of paying only lost profits or a reasonable royalty—and even then, only if the patent owner brings an expensive patent suit. Innovators might be dissuaded from pursuing patent protection or worse, from innovating in the first place, if they feel that patent remedies are inadequate to protect their inventions.

On the other hand, if the Court rejects the *Seagate* test in favor of a more flexible or holistic approach, and further orders that the application of this flexible approach be deferentially reviewed, a "Flexible and Deferential Approach" scenario would result. Under this scenario, the district courts would have the freedom to consider all pre- and post-suit conduct in deciding whether to enhance damages and the appellate court would be less likely to reverse those decisions. With an increased threat of enhanced damages, implementers of technology will give wide berth to patent rights, and might be incentivized to more readily take licenses to patents or settle patent disputes when they arise, better protecting patent rights.

Like the Affirmed Status Quo scenario, however, the Flexible and Deferential Approach scenario is not without faults. Opportunistic patent holders may seize upon and unfairly exploit the increased risk of enhanced damages, extorting unjust settlements. Implementers of technology might feel compelled to expend significant resources investigating patents or worse, avoid whole areas of technology altogether, potentially stifling innovation.

ARGUMENT

I. Brief Background on the Value of Patents and Patent Licensing

Patent rights are valuable. At a societal level, this value is recognized in the constitutional foundation of our Country's patent system: "The Congress shall have Power . . . To promote the

progress of science and useful arts, by securing for limited times to authors and inventors the exclusive right to their respective writings and discoveries . . . ." U.S. Const., art. I, § 8, cl. 8. The Founding Fathers believed that "ingenuity should receive a liberal encouragement." 5 Writings of Thomas Jefferson 75–76 (H. Washington ed. 1871). The strength of the patent system continues to be a significant public policy concern and is the focus of significant legislative activity. *See* STRONG Patents Act of 2015, S632, 114th Cong. (2015). A strong patent system encourages innovation, is essential to economic success, promotes the chances of success for small companies, provides jobs and economic revenue in patent-intensive industries and allows the United States to maintain its status as the world's innovation leader. *Id.* § 101.

The economic benefits of patent rights are indisputable. Intellectual property-intensive industries support 40 million jobs and contribute $5.06 trillion dollars to the U.S. economy, over one-third of U.S. gross domestic product. U.S. Dep't of Commerce, Intellectual Property and the U.S. Economy: Industries in Focus at vi-vii (2013).

The value of patents is rooted in the scope of the rights that they confer. At their core, patents confer a right to exclude others from, *inter alia*, making, using, offering to sell, selling or importing the patented inventions within the United States. *See* 35 U.S.C. § 271 (a) *et seq*.

One obvious way that innovators and patent owners can derive value from their patents is by excluding their competitors from practicing the

patented inventions, giving themselves a valuable edge in the marketplace. Another important way patent owners can derive value is by licensing their patented inventions to technology implementers.

Through such licensing, companies can extract tremendous value from their patents. It is reported that Microsoft and Ericsson generate more than $2 Billion in annual licensing revenue, and Qualcomm, regarded as a leader in patent licensing, reportedly generates more than $6.6 Billion in annual licensing revenue. *See* Terry Ludlow, *Trends In Technology IP Licensing*, IPO Law J., Dec. 10, 2014, at 4, *available at* http://www.ipo.org.

Private industry is not alone in deriving significant value from patents and patent licensing. According to the fiscal year 2014 survey by the Association of University Technology Managers ("AUTM"), there were over 5,400 new patent licenses executed by U.S. universities, hospitals and research institutions in fiscal year 2014 (an increase of 4.5% over 2013). AUTM, *Highlights of AUTM's U.S. Licensing Activity Survey*, FY2014, at 7, *available at* http://www.autm.net. The prior year's version of the AUTM survey cites to a study by the Biotechnology Industry Organization ("BIO"), which estimates the economic impact of university and nonprofit patent licensing from 1996 to 2010 was as much as $388 Billion on the U.S. gross domestic product and $836 Billion on the U.S. gross industrial output, while creating as many as 3 million jobs. AUTM, *Highlights of AUTM's U.S. Licensing Activity Survey*, FY2013, at 8, *available at* http://www.autm.net.

Patents, and the licensing thereof, are an important part of the United States economy. The promotion of strong patent rights is vital to the continued economic success of our nation. It is with this background that LES submits the following analysis of the possible practical outcomes of the Court's decision.

II. Enhancement of Damages Under the Current Framework

A. The *Seagate* Enhanced Damages Test and *De Novo* Standard of Review

The current framework for enhancement of damages was set forth in *In re Seagate Technology, LLC*, 497 F.3d 1360 (Fed. Cir. 2007) (*en banc*). There, the Federal Circuit found that its own precedent, and this Court's decision in *Aro Mfg. Co. v. Convertible Top Replacement Co.*, 377 U.S. 476, 508 (1964), required a showing of willful infringement for there to be an award of enhanced damages. *Id.* at 1368.

Having determined that willful infringement is a predicate for enhanced damages, the Federal Circuit reevaluated its prior standard for evaluating willful infringement as set forth in *Underwater Devices Inc. v. Morrison-Knudsen Co.*, 717 F.2d 1380 (Fed. Cir. 1983). *Seagate* 497 F.3d at 1368-69. The *Underwater Devices* decision put potential infringers under an "affirmative duty to exercise due care to determine whether or not [they are] infringing." *Underwater Devices*, 717 F.2d at 1389-90. This affirmative duty required potential infringers to

obtain an opinion from counsel prior to initiation of infringing activity. *Id.* at 1390. According to the *Seagate* court, the *Underwater Devices* willful infringement standard was announced at a time "when widespread disregard of patent rights was undermining the national innovation incentive." *Seagate* 497 F.3d at 1369 (quoting *Knorr-Bremse Systeme Fuer Nutzfahrzeuge GmbH v. Dana Corp.*, 383 F.3d 1337, 1343 (Fed. Cir. 2004) (*en banc*)).

However, the *Seagate* court recognized that requiring accused infringers to rely on opinions of counsel as a defense to willful infringement presented many practical concerns related to the attorney-client privilege and work product doctrine. *Id.* Moreover, the Federal Circuit observed that the duty of care announced in *Underwater Devices* was more akin to a lower, negligence, standard than the recklessness standard for a finding of willfulness that was required by this Court's decision in *Safeco Ins. Co. of America v. Burr*, 551 U.S. 47 (2007). *Seagate* 497 F.3d at 1371.

Thus, the Federal Circuit reversed the *Underwater Devices* standard and held that willful infringement permitting enhanced damages required at least a showing of objective recklessness. *Id.* The *Seagate* court also emphasized that, because it abandoned the affirmative duty of due care, there is no affirmative obligation to obtain an opinion of counsel. *Id.*

To establish willful infringement, the *Seagate* court held, "a patentee must show by clear and convincing evidence that the infringer acted despite an objectively high likelihood that its actions

constituted infringement of a valid patent." *Id.* The infringer's state of mind is not relevant to this objective inquiry. *Id.* Only once the threshold objective standard is satisfied may a court consider the subjective state of mind of the infringer to determine whether the "objectively-defined risk (determined by the record developed in the infringement proceeding) was either known or so obvious that it should have been known to the accused infringer." *Id.* The application of this standard was left to future cases.

One such "future case" was *Bard Peripheral Vascular, Inc. v. WL Gore & Associates, Inc.*, 682 F.3d 1003 (Fed. Cir. 2012). There, the Federal Circuit held that the *Seagate* threshold "objective determination of recklessness, even though predicated on underlying mixed questions of law and fact, is best decided by the judge as a question of law subject to *de novo* review." *Id.* at 1007.

B. Empirical Evidence Suggests that Enhanced Damages Are More Difficult to Attain Under the Current Framework

1. Evidence Shows that Enhanced Damages are Less Likely to be Awarded Under the *Seagate* "Objective Recklessness" Standard

The current willfulness framework was born from a then-prevailing belief that charges of willful infringement, and the satellite litigation that surrounded those questions, had become too

prevalent in patent litigation. *See Knorr-Bremse*, 383 F.3d at 1345 (explaining that the use of counsel opinions to refute willfulness charges had "occasioned extensive satellite litigation"); *see also* Christopher B. Seaman, *Willful Patent Infringement and Enhanced Damages After In re Seagate: An Empirical Study*, 97 Iowa L. Rev. 417, 428 (2012) (observing that *Seagate* was decided "[i]n the face of continuing criticism from academics and patent litigators, as well as legislative efforts to limit willfulness") (footnotes omitted). Many commentators predicted that *Seagate*'s "objective recklessness" standard would have a major impact on willfulness because it increased the patentee's burden of proving willfulness as compared to the prior, negligence-like standard of *Underwater Devices*. *See id.* at 431-32 (collecting articles).

In an empirical study of pre-*Seagate* patent infringement cases terminated during litigation from 1999-2000, then-Professor (now Federal Circuit Judge) Kimberly Moore found willfulness alleged in the originally-filed complaint in 92.3% of cases. Kimberly A. Moore, *Empirical Statistics on Willful Patent Infringement*, 14 Fed. Cir. B.J. 227, 232 (2004) (herein, "Moore *Empirical*"). Judge Moore's study also considered a broader set of pre-*Seagate* cases tried from 1983 to 2000 and observed that willfulness was found in 67.7% of jury trials and 52.6% of bench trials that reached the question. *Id.* at 237; *see also* Kimberly A. Moore, *Judges, Juries, and Patent Cases—An Empirical Peek Inside the Black Box*, 99 MICH. L. REV. 365, 390 & tbl.4 (2000) (herein, "Moore *Judges*") (determining that

willfulness was found 63.8% of the time it was decided from 1983-1999). Judge Moore observed that "[w]illfulness was only decided if and when the case went to trial. . . .[w]illfulness was never decided on summary judgment." Moore *Empirical*, *supra*, at 234. Regarding her finding that willfulness was almost always (92.3% of the time) alleged in pre-*Seagate* patent cases, Judge Moore remarked "[t]hese results suggest that willfulness claims are plaguing patent law." *Id.* at 232.

Following up on Judge Moore's work, Professor Christopher Seaman evaluated willfulness cases before and after *Seagate* to determine if *Seagate*'s "objective recklessness" standard had an impact on willfulness. *See* Seaman, *supra*, at 431-32. His findings indicate that *Seagate* did have a measurable impact on findings of willfulness in patent cases.

First, whereas Judge Moore observed that willfulness was never decided on summary judgment in the 1999-2000 era, Professor Seaman's study found that willfulness is more likely to be disposed of on a pre-trial motion post-*Seagate*. *Id.* at 440.

Second, whereas Judge Moore determined that willfulness was found 63.8% of the time it was decided from 1983-1999, Professor Seaman saw this rate drop to 48.2% in the three years leading up to *Seagate*[2] and drop further to 37.2% in the three years after *Seagate*. *Id.* at 444.

---

[2] Professor Seaman hypothesized that the first, pre-*Seagate*, drop in willfulness findings was due to the Federal Circuit's decision in *Knorr-Bremse*, *supra*, which eliminated the

(Continued ...)

Third, whereas Judge Moore observed that willfulness was found in 67.7% of jury trials and 52.6% of bench trials that reached the issue, Professor Seaman saw those numbers drop to 53.9% and 18.5%, respectively. *Id.* at 444-45.

The drop in judicial findings of willfulness (from 52.6% pre-*Seagate* to 18.5% post) was the most prominent post-*Seagate* change. Professor Seaman attributes part of this result to a post-*Seagate* increase in district court decisions granting motions for JMOL on willfulness; all pre-verdict JMOL decisions in the post-*Seagate* era he studied found no willfulness. *Id.* at 445. Another factor leading to this drop in judicial findings of willfulness is federal judges' heightened understanding (particularly when compared to jurors) that "objective recklessness" under *Seagate* requires a higher degree of culpability than the negligence-like standard of *Underwater Devices*.[3] *Id.* at 446.

From the above empirical observations, it appears that *Seagate*, and its changing of the willfulness standard from a negligence-like "affirmative duty to exercise due care" to one of "objective recklessness," did impact the determination of willfulness, making

---

adverse inference that previously attached to an accused infringer's failure to obtain or disclose an opinion of counsel. Seaman, *supra*, at 444.

[3] Jurors' lack of understanding of the post-*Seagate* willfulness standard might be compounded by the complexity of the model patent jury instructions on willfulness. *See* Seaman, *supra* at 447-48.

an award of enhanced damages less likely post-*Seagate*.

2. Evidence Also Suggests that the *De Novo* Standard of Review Makes Enhanced Damages More Difficult to Maintain on Appeal

Much the same as the *Seagate* "objective recklessness" threshold framework might make enhanced damages difficult to attain at the trial court level, the *de novo* standard of appellate review applied to those decisions might make any findings of willfulness difficult to maintain on appeal.

As discussed above, the empirical evidence tends to show that, post-*Seagate*, judges are much less likely than juries to find willfulness (juries find willfulness 53.9% of the time and judges find it 18.5% of the time). *See* Section II.B.1., *supra* (citing Seaman, *supra*). Part of this disparity is because judges better appreciate, and therefore are more influenced by, the import of the *Seagate* "objective recklessness" threshold. *See id.*

In his study, Professor Seaman also considered the rates at which findings of willfulness resulted in enhanced damages, both pre-*Seagate* and post.[4] *See*

---

[4] Under *Seagate*, the award of enhanced damages is within the discretion of the district judge, but only after either the judge or jury makes a finding of willfulness. *See Seagate*, 497 F.3d at 1368; 35 U.S.C. § 284 ("[T]he court may increase the damages up to three times the amount found or assessed.").

Seaman, *supra*, at 464. He found that willfulness resulted in enhanced damages 81.4% of the time pre-*Seagate* and dropped significantly, to 54.9% of the time, after *Seagate*. *Id.* at 466.

Professor Seaman further considered if the rate of award of enhanced damages depended on whether the judge or jury found willfulness. *Id.* at 466-67. When judges find willfulness, the rate at which enhanced damages were awarded was consistent before and after *Seagate* (at 85.7% and 87.5%, respectively). *Id.* at 467. However, when juries find willfulness, the rate at which enhanced damages were awarded dropped significantly, from 80.6% to 48.8%. *Id.*

This data suggests that district court judges are withholding awards of enhanced damages as a check on weak or questionable jury findings of willfulness. *See id.*; *see also* Moore *Judges*, *supra*, at 394 ("[Data indicates] that judges function as a check to temper jury findings on willfulness—or that judges simply give themselves more credit in terms of the likelihood that the willfulness decision is correct."). Thus, not only are judges themselves less likely to find willfulness post-*Seagate*, they are less likely to award enhanced damages when juries find willfulness post-*Seagate*.

Therefore, just as district judges' decreased propensity to find willfulness post-*Seagate* at least partially results from their understanding of *Seagate*'s heightened "objective recklessness" threshold, *see* Section II.B.1., *supra*, district judges' increased propensity to nullify jury findings of willfulness through withholding of enhanced

damages might also result from their understanding of *Seagate*. *See id.*; *see also* Seaman, *supra*, at 445-46, 467.

Given the district judges' tendency to veto the jury's willfulness findings based on their understanding of *Seagate*, it is not a far leap to assume that the Federal Circuit judges are equally inclined to veto the district judges under the *de novo* review standard applied to the threshold "objective determination of recklessness." *See Bard*, 682, F.3d at 1007. Indeed, Petitioners observe that the *de novo* standard has just such an impact in willfulness decisions. *See* Petition for a Writ of Certiorari, *Stryker Corp. v. Zimmer, Inc.*, S.Ct. No. 14-1520, at 34-37 (June 22, 2015) (herein, "Stryker Petition") (asserting that the non-deferential, *de novo* standard ignores the district court's perspective and case familiarity); *see also id.* at 27 (observing that "the Federal Circuit regularly affirms on validity but reverses on willfulness").

Thus, based on the foregoing, it appears that enhanced damages are difficult to attain under the current, *Seagate* framework. It also appears that, even if enhanced damages were awarded, such awards might be imperiled on appeal under the current *de novo* standard of review for the objective prong of the willfulness inquiry.

III. Affirming the *Seagate* Enhanced Damages Framework Might Encourage Predictable and Consistent Results

Proponents of the current willfulness framework might assert that *Seagate* has brought greater

predictability and consistency to the determination of willfulness. First, proponents might argue that technology implementing and commercializing companies are able to make business decisions more efficiently when they are relieved of the unpredictable pre-*Seagate* "duty of due care." Second, proponents might assert that the current framework increases consistency in willfulness findings amongst the district courts, decreasing the incentive for disfavored forum shopping.

A. Implementers of Technology Might be Able to Operate More Efficiently Under the Current *Seagate* Standard

Prior to the current, *Seagate* standard, implementers of technology were under an "affirmative duty to exercise due care to determine whether or not [they are] infringing." *Underwater Devices*, 717 F.2d at 1389-90. Part of this "affirmative duty" was the "duty to seek and obtain competent legal advice from counsel *before* the initiation of any possible infringing activity." *Id.* at 1390 (emphasis in original).

This "affirmative duty to exercise due care" and, in particular, the obligation to obtain an opinion of counsel, proved to be onerous for technology implementers in the *Underwater Devices* era.

For example, concerns over a potential "adverse inference," that attached if an accused infringer failed to obtain or failed to disclose an opinion of counsel, persisted for many years. *See Knorr-Bremse*, 383 F.3d at 1343-44, 1345 (discussing and

then rejecting the "adverse inference" rule). And, when an accused infringer did choose to rely on an opinion, there were concerns as to the scope of the privilege and work product waiver that resulted. *See In re EchoStar Commc'ns Corp.*, 448 F.3d 1294, 1304 (Fed. Cir. 2006) (finding waiver reached "any document or opinion that embodies or discusses a communication to or from it concerning whether that patent is valid, enforceable, and infringed by the accused").

Thus, companies operating in the *Underwater Devices,* "due care," era faced an incredibly difficult choice between waiving the sacred attorney-client privilege or else potentially facing enhanced damages. *See Quantum Corp. v. Tandon Corp.*, 940 F.2d 642, 643 (Fed. Cir. 1991) (explaining the "the dilemma of an accused infringer who must choose between the lawful assertion of the attorney-client privilege and avoidance of a willfulness finding if infringement is found").

In light of these concerns, some questioned the appropriateness of the "affirmative duty to exercise due care." Summarizing many of the then-prevailing complaints about the "due care" duty, Federal Circuit Judge Dyk observed:

> [T]he due care requirement has fostered a reluctance to review patents for fear that the mere knowledge of a patent will lead to a finding of lack of due care; a cottage industry of window-dressing legal opinions by third party counsel

> designed to protect the real decision-making process between litigating counsel and the company's executives; the imposition of substantial legal costs on companies seeking to introduce innovative products; and an enhanced ability of holders of dubious patents to force competitors' products off of the market through the threat of enhanced damages.

Knorr-Bremse, 383 F.3d at 1351 (Dyk, J., concurring in part and dissenting in part) (citations omitted); *see also id.* at 1345 ("The *amici curiae* describe the burdens and costs of the requirement, as pressed in litigation, for early and full study by counsel of every potentially adverse patent of which the defendant had knowledge . . . .").

Among the concerns listed by Judge Dyk was reluctance by companies to review patents. *See id.* at 1351 (Dyk, J., concurring in part and dissenting in part). If companies did indeed actively avoid reviewing patents—which are meant to inform the public of inventions in exchange for limited exclusivity—the entire purpose of the patent system is undermined. *See FTC, To Promote Innovation: The Proper Balance of Competition and Patent Law and Policy*, ch. 5, at 28-31 (2003) ("[P]anelists raised a separate problem: fear of willfulness charges discourages inventors from reading others' patents, thereby undermining the disclosure function of the patent system.").

Recognizing these concerns and the "functional relationship between [its] willfulness jurisprudence and the practical dilemmas faced in the areas of attorney-client privilege and work product protection," the *en banc Seagate* court abandoned the "affirmative duty of due care" and "reemphasized that there is no affirmative obligation to obtain opinion of counsel." *Seagate* 497 F.3d at 1367, 1371.

Implementers of technology operating in the post-*Seagate* era are no longer obligated to obtain costly, "window-dressing," opinions, freeing capital and resources to be spent elsewhere. *See Knorr-Bremse*, 383 F.3d at 1351 (Dyk, J., concurring in part and dissenting in part). This can be particularly important in crowded technology areas where the expense of vetting all potentially applicable patents can be overwhelming. *See* Moore *Empirical*, *supra*, at 228 n.5 (estimating the cost of opinions to be between $5,000 and over-$100,000 *per patent*).

Likewise, technology implementers no longer have to anguish over the decision to waive their attorney-client privilege by introducing an opinion of counsel post-*Seagate*. *See* Seaman, *supra*, at 451-52 & tbl.5 (finding no statistically significant difference in willfulness outcomes based on opinions of counsel post-*Seagate*); *see also* 35 U.S. Code § 298 ("The failure of an infringer to obtain the advice of counsel with respect to any allegedly infringed patent, or the failure of the infringer to present such advice to the court or jury, may not be used to prove that the accused infringer willfully infringed the patent or that the infringer intended to induce infringement of the patent.").

Freed of the "due care" mandate that they obtain attorney opinions as a matter of course, technology implementers can be more selective, and therefore efficient, in their due diligence efforts. For example, some have remarked:

> [T]he affirmative duty of care is not necessary to encourage reasonable, risk-adverse parties to conduct careful infringement analyses. Most prudent manufacturers have a strong commercial incentive to investigate whether a planned product would infringe on another's patent prior to launch, so as to avoid relinquishing any profits in the form of compensatory damages as well as lost investment in wasted development, marketing, and legal expenses.

Brief of *Amicus Curiae* on Behalf of Fédération Internationale des Conseils en Propriété Industrielle in Support of Neither Party, *In re Seagate Technology, LLC*, 497 F.3d 1360 (Fed. Cir. 2007) (Misc. No. 2006-830),

Moreover, with the decreased likelihood of enhanced damages in the post-*Seagate* era, *see* Section II.B., *supra*, technology implementers may be less concerned about unfair "patent hold up" from opportunistic patent owners. *See* Scott Baker, *Can the Courts Rescue Us from the Patent Crisis?*, 88 Tex. L. Rev. 593, 598 (2010) ("The patent holdup waits until a firm or group of firms has sunk resources into developing a product that arguably infringes its

patent. It then sues and uses the threat of a punitive remedy, either injunctive relief or treble damages for willful infringement, to extract a settlement that exceeds what it would have gotten if it licensed its patent *ex ante*.").

Therefore, proponents of the current willfulness framework might assert that *Seagate* brought efficiency and certainty to the law of willfulness and enhanced damages under § 284.

B. Through Increased Consistency Amongst the District Courts, the Current Framework May Dissuade Forum Shopping

Proponents of the current, *Seagate* standard might also assert that post-*Seagate* changes in willfulness outcomes, both the empirical ones measured above and other anecdotal observations, have yielded greater predictability to the determination of willfulness. Indeed, while allegations of willfulness remain consistently high post-*Seagate*, *see* Seaman, *supra*, at 442-443 & n.166, the likelihood of being liable for willful infringement has noticeably decreased. *See* Section II.B., *supra*. This is particularly true when questions of willfulness are decided by judges who understand the significance of the *Seagate*, "objective recklessness" standard (as opposed to jurors who take a less-nuanced, "right" or "wrong" view). *See id.*; *see also* Moore *Judges*, *supra*, at 393 (hypothesizing that juries find willfulness significantly more often than judges because "juries are more easily persuaded than judges by 'bad guy' evidence").

When one considers that it is district court judges whose decisions are most impacted by the legal standard for willfulness, concerns over variability amongst different districts become important. In a study of tried pre-*Seagate* cases from 1983 to 1999, Judge Moore observed that the rates patent owners prevailed on the question of willfulness ranged from a high of 85% in the Northern District of Illinois to a low of 42% in the District of Massachusetts. *See* Kimberly A. Moore, *Forum Shopping in Patent Cases: Does Geographic Choice Affect Innovation?*, 79 N.C. L. Rev. 889, 919 & tbl.10 (2001) (herein, "Moore *Forum*").

Professor Seaman analyzed willfulness decisions during a period of September 2004 to July 2010 (covering a period post-*Knorr-Bremse* (2004) and approximately three years on either side of *Seagate*, (2007)) and found that the rates of willfulness findings varied from a high of 52.3% in the Eastern District of Texas to a low of 27.3% in the District of Minnesota. Seaman, *supra*, at 451.

While the overall success rate for patent holders has decreased post-*Seagate*, as observed above, there remains quite a bit of variability from district to district. Some have suggested that this variability might lead to "forum shopping" by patent holders seeking their best odds on willfulness. *See* Moore *Forum*, *supra* at 919 ("It is likely that some combination of factors led parties to select particular jurisdictions . . . .").

Thus, if forum shopping is not eliminated by the *Seagate* willfulness standard, then it might at least be tempered by the *de novo* standard of review

applied to the objective prong of the *Seagate* analysis. *See Bard*, 682 F.3d at 1007.

Prior to creation of the Federal Circuit, there were circuit splits on various patent-law issues, with certain circuits perceived as "pro-patent" and others as "anti-patent," resulting in much forum shopping. *See* H.R. Rep. No. 97-312, at 20-21 (1981). Forum shopping was found to increase litigation costs, decrease the ability to advise clients, and "demean[] the entire judicial process and the patent system as well." *Id.* at 21. Thus, the Federal Circuit was created to "provide nationwide uniformity in patent law," "make the rules applied in patent litigation more predictable," and "eliminate the expensive, time-consuming and unseemly forum-shopping that characterizes litigation in the field." *Id.* at 20.

The non-deferential *de novo* standard of review allows the Federal Circuit to uniformly apply the objective prong of the *Seagate* willfulness standard (which, as mentioned above, is more readily understood by judges than juries) to decisions issuing from the various district courts.

Thus, proponents of the current willfulness framework may assert that the increased uniformity from *de novo* review results in desirable outcomes such as more predictability, less expense and less forum shopping in the context of willfulness outcomes. *See id* at 21.

IV. Creating a More Flexible and Deferential Enhanced Damages Framework Might Deter Undesirable Behavior and Better Protect Inventions

A. Making Enhanced Damages More Attainable Might Increase their Deterrent Effect

As a form of punitive punishment, enhanced damages are meant to both deter undesirable behavior and, in appropriate circumstances, punish bad behavior. *See Aro Mfg. Co.*, 377 U.S. at 508 (1964) (explaining that the patentee "could in a case of willful or bad-faith infringement recover punitive or 'increased' damages under the statute's trebling provision"); *see also Rite-Hite Corp. v. Kelley Co.*, 819 F.2d 1120, 1126 (Fed. Cir. 1987) ("The role of a finding of 'willfulness' in the law of infringement is partly as a deterrent — an economic deterrent to the tort of infringement . . . ."). It appears that as the attainability of enhanced damages changed over time, so too did their deterrent effect.

Prior to *Underwater Devices* in 1983, there was "widespread disregard of patent rights [that] was undermining the national innovation incentive." *Knorr-Bremse*, 383 F.3d at 1343. Indeed, the *Underwater Devices* court observed that the accused infringer's attorney advised his client to "continue to refuse to even discuss the payment of a royalty with" the patent holder because "[c]ourts, in recent years, have — in patent infringement cases — found the patents claimed to be infringed upon invalid in approximately 80% of the cases." *Underwater Devices*, 717 F.2d at 1385. The attorney thus advised

his client to ignore the patent holder until his client was sued, stating "[i]f they do elect to sue us, then we can consider negotiating a royalty based on what it might cost us to try the suit." *Id.*

Thus, it was "[o]n this record of flagrant disregard of presumptively valid patents without analysis," that the *Underwater Devices* court announced the requirement that implementers of potentially-patented technology exercise an "affirmative duty to exercise due care to determine whether or not [they are] infringing". *Knorr-Bremse*, 383 F.3d at 1343 (citing *Underwater Devices*, 717 F.2d at 13889-90).

The "affirmative duty," post-*Underwater Devices*, era lasted from 1983 until *Seagate* was decided in 2007. *See Seagate*, 497 F.3d at 1371 (overruling *Underwater Devices* and expressly abandoning the affirmative duty of due care).

As described above, the affirmative duty of due care significantly impacted the behavior of companies seeking to implement potentially-patented technology. *See* Section III.A.1., *supra*. Rather than "flagrantly disregard" patent rights, as might have been done prior to *Underwater Devices*, *see Knorr-Bremse*, 383 F.3d at 1343, technology implementers invested significant money and resources into investigating patents. *See* Section III.A.1., *supra*.

In the current, post-*Seagate* era, implementers of potentially-patented technology are no longer under any affirmative duty of due care. *See Seagate* 497 F.3d at 1371. Rather, liability for enhanced damages

would be determined based upon a threshold showing of "objective recklessness." *Id.*

As may be seen from the empirical evidence cited above, enhanced damages under 35 U.S.C. § 284 appear more difficult to attain under the current *Seagate* framework. *See* Section II.B., *supra.* Whereas the rate of success for decided willfulness accusations was as high as 63.8% pre-*Seagate*, it dropped to 37.2% after *Seagate*. *See id.* Also, to the extent the willfulness question is decided by a judge, who better understands the legal implications of the "objectively reckless" *Seagate* threshold, the chance of success on a decided willfulness accusation is halved to just 18.5%. *See id.*

Petitioners' anecdotal observations go somewhat further than this empirical data, asserting that the Federal Circuit's *Seagate* standard renders § 284 "largely superfluous" and enhanced damages "largely unattainable." *See* Petition for a Writ of Certiorari, *Halo Electronics, Inc. v. Pulse Electronics, Inc.*, S.Ct. No. 14-1513, at 18 (June 22, 2015) (herein, "Halo Petition") ("[T]he Federal Circuit has interpreted § 284 so narrowly that it forbids district courts from enhancing damages even in cases of bad faith infringement, so long as the defendant presents a non-sham trial defense, rendering § 284 'largely superfluous.'"); Stryker Petition at 21 ("The Federal Circuit's rigid and inflexible willfulness framework is so demanding that 'it renders enhanced damages under §284 largely unattainable."). When viewed along with the empirical evidence discussed above, Petitioners' concerns are understandable.

Petitioners assert that one key flaw of the current enhanced damages framework is that it permits *post-hoc*, litigation-contrived defenses to be exculpatory of willfulness, irrespective of the infringer's pre-suit conduct. *See, e.g.*, Halo Petition at 2 ("[D]istrict courts are now unable to impose enhanced damages if a defendant presents a non-frivolous defense, even if it acted in bad faith before the suit by copying the patentee's product, ignoring offers to license, and failing to investigate or develop any pre-suit defense."); Stryker Petition at 3 ("The Federal Circuit's current willfulness framework undermines the intended deterrent effect of § 284 by immunizing infringers from enhanced damages so long as they present at least one plausible defense at the post-trial appellate stage.").

The empirical evidence lends credence to Petitioners' assertions. Professor Seaman's study evaluated several factors identified as relevant to willfulness findings after *Seagate*: whether the infringer proffered an opinion of counsel; whether the infringer proffered a "substantial defense" during litigation; whether there was evidence that the infringer copied the patented technology; whether the infringer made attempts to design around the patent; whether the patent was subject to reexamination by the Patent Office; and whether the proceedings were bifurcated. Seaman, *supra*, at 451-52.

The two most impactful factors were evidence of copying and proffer of a "substantial defense."[5] *Id.* at 452. Professor Seaman found that evidence of copying was highly correlated with a finding of willfulness and that a "substantial defense to infringement" was highly correlated with a finding of no willfulness.[6] *Id.*

Though the empirical evidence indicates that both copying and "substantial defenses" are highly correlated to findings of willfulness and no willfulness, respectively, the two factors do not necessarily cancel each other out. This is because "substantial defenses" are evaluated during the threshold, objective prong of the *Seagate* analysis, and evidence of copying is relegated to the secondary, subjective prong. *See Seagate*, 497 F.3d at 1371. Under this tiered construct, evidence of copying, highly correlated to a finding of willfulness, will not be considered unless there is insufficient evidence of "substantial defenses."

---

[5] The "substantial defense" cases were those where there had been an explicit determination by the fact finder that a defense, though unsuccessful, was "substantial," "legitimate," or "credible." Seaman, *supra*, at 455-56.

[6] The remaining factors, including proffer of an opinion of counsel and attempts to design around, had no statistically significant impact on findings of willfulness. Seaman, *supra*, at 452.

Thus, the current framework's objective threshold inquiry might have the combined effect of both amplifying the exculpatory nature of "substantial defenses" and suppressing the incriminating nature of copying and other bad-faith acts. *See Halo Elecs., Inc. v. Pulse Elecs., Inc.*, 780 F.3d 1357, 1362 (Fed. Cir. 2015) (O'Malley, J., joined by Hughes, J., dissenting) ("We have gone so far, moreover, to require that an evidentiary wall be erected between the objective and subjective portions of the inquiry. We preclude considerations of subjective bad faith—no matter how egregious—from informing our inquiry of the objective baselessness of a claim and preclude the weakness a claim or defense from being indicative of a parties' subjective bad faith.").

One reasonable conclusion from the foregoing is that enhanced damages are not an effective deterrent under the current framework. Indeed, some would argue that when the focus of the inquiry is on post-suit justifications, rather than pre-suit conduct, technology implementers are not incentivized to modify their conduct by the threat of enhanced damages. If true, this would be most undesirable from a policy perspective.

Thus, a more flexible enhanced damages framework, one that considers both pre- and post-infringement conduct, might much better accomplish the deterrent purpose of enhanced damages. Moreover, a more deferential review of enhanced damages awards might give district court judges more flexibility to shape outcomes to the needs of a particular case.

B. Inventions Might Be Better Protected Under a Stronger Enhanced Damages Framework

As discussed above, patent rights are valuable to both society as a whole and to the patent holders who own and license them. *See* Section I, *supra*. At a societal level, our patent system encourages innovation and furthers our nation's economic success. *See id.* At a patent-owner level, patents give their owners a competitive market edge or a potential licensing revenue stream. *See id.*

However, patents are only as valuable as the exclusion rights that they confer and, as a corollary, the respect with which they are treated. *See id.* When patents are given little respect, they afford less value.

For example, as discussed above, the accused infringer in *Underwater Devices* was advised that because there was an 80% chance the patent might be invalidated during litigation, it should refuse to even engage in licensing discussions with the patent holder. *Underwater Devices*, 717 F.2d at 1385. Only if the accused infringer was sued was it advised to negotiate a royalty—one based only on the cost of the litigation, not the value of the technology. *Id.*

Not only did the *Underwater Devices* infringer's conduct fly in the face of the presumed validity of patents, *see* 35 U.S.C. § 282 (a), but it epitomized the "flagrant disregard of presumptively valid patents without analysis" abound at a time "when widespread disregard of patent rights was

undermining the national innovation incentive." *Knorr-Bremse*, 383 F.3d at 1343.

Thus, without an effective deterrent to the type of "flagrant disregard" found in *Underwater Devices*, patent rights might be devalued. Free riders, such as the infringer there, can avoid even discussing a license unless and until they are sued by the patent owner.

However, as both infringers and patent holders well know, patent suits are expensive. According to the American Intellectual Property Law Association's ("AIPLA") 2015 Report of the Economic Survey, the median cost of a patent infringement suit with more than $1 Million at risk ranges from $2 Million to more than $5 Million. Am. Intellectual Prop. Law Ass'n, *AIPLA Report of the Economic Survey*, 37 (2015).

Even if the patent owner does bring an expensive lawsuit, without a credible threat of enhanced damages, an accused infringer knows that if it loses, it might only have to pay lost profits (at worst) or have to pay a "reasonable royalty." *See* 35 U.S.C. § 284. However, the widely-adopted *Georgia-Pacific* reasonable royalty framework assumes a "hypothetical negotiation" between a "willing licensor" (the patent owner) and a "willing licensee" (the infringer), at the time the infringement began. *Georgia-Pacific Corp. v. United States Plywood Corp.*, 318 F. Supp. 1116, 1121 (S.D.N.Y. 1970).

Therefore, without the threat of enhanced damages, the infringer who disregards patents, refuses to negotiate licenses, and takes its chances in

court, might wind up in a no worse position than if it had negotiated a license in the first place—presuming the patent owner can afford to pursue him that far. Some might characterize such a scenario as a disfavored type of "compulsory license."

> The setting of a reasonable royalty after infringement cannot be treated, as it was here, as the equivalent of ordinary royalty negotiations among truly "willing" patent owners and licensees. That view would constitute a pretense that the infringement never happened. It would also make an election to infringe a handy means for competitors to impose a "compulsory license" policy upon every patent owner.

Panduit Corp. v. Stahlin Bros. Fibre Works, Inc., 575 F.2d 1152 (6th Cir. 1978).

Faced with such grim prospects, innovators might become dissuaded from investing in research and development. Or, even if they continue to innovate, they might eschew the patent system all together, keeping their discoveries for themselves. Such behavior would undercut one of the fundamental purposes of our patent system—to enrich public knowledge. *See Wellman, Inc. v. Eastman Chem. Co.*, 642 F. 3d 1355, 1360 (Fed. Cir. 2011) (referencing the "statutory bargained-for-exchange" by which a patentee obtains the right to exclude others for a certain time period and the "public

receives knowledge of the preferred embodiments for practicing the claimed invention") (quotation omitted).

However, a stronger enhanced damages framework that creates a credible threat of enhanced damages might dissuade such hold-out tactics by technology implementers. Technology implementers might be more readily brought to the negotiation table, avoiding the burden and expense of litigation for both parties. If forced, innovators might be more inclined to defend their patent rights in court if the potential for enhanced damages made the expense of litigation more justifiable. And if sued and credibly threatened with enhanced damages, an accused infringer might be encouraged to rationally evaluate settlement opportunities early and often.

Thus, a stronger enhanced damages framework might better protect patented inventions and encourage continued innovation.

CONCLUSION

As can be seen from the above, this Court's decision will almost certainly have an important impact on the rights and behavior of both patent holders and implementers of technology. The Court must weigh the burden, expense and uncertainty that a more liberal enhanced damages framework might place on technology implementers against the need to protect and reward innovation through a strong and robust patent system.

Respectfully submitted,

DANIEL S. STRINGFIELD
Counsel of Record
STEPTOE & JOHNSON LLP
115 S. LaSalle, Suite 3100
Chicago, Illinois 60603
312.577.1300
dstringfield@steptoe.com

Counsel for Amicus Curiae Licensing Executives Society (U.S.A. and Canada), Inc.

DECEMBER 16, 2015

Supreme Court, U.S.
FILED
JAN 20 2016
OFFICE OF THE CLERK

Nos. 14-1513 and 14-1520

IN THE
Supreme Court of the United States

HALO ELECTRONICS, INC.,
Petitioner,
v.
PULSE ELECTRONICS, INC., *et al.*,
Respondents.

STRYKER CORPORATION, *et al.*,
Petitioners,
v.
ZIMMER, INC., *et al.*,
Respondents.

On Writs of Certiorari to the United States Court of Appeals for the Federal Circuit

BRIEF OF *AMICUS CURIAE* MARVELL SEMICONDUCTOR, INC. IN SUPPORT OF RESPONDENTS

SUSAN ESTRICH
MICHAEL T. ZELLER
QUINN EMANUEL URQUHART & SULLIVAN, LLP
865 S. Figueroa St.
10th Floor
Los Angeles, CA 90017
(213) 443-3000

KATHLEEN M. SULLIVAN
Counsel of Record
EDWARD J. DEFRANCO
JOSEPH MILOWIC III
DAVID M. COOPER
QUINN EMANUEL URQUHART & SULLIVAN, LLP
51 Madison Avenue, 22nd Floor
New York, NY 10010
(212) 849-7000
kathleensullivan@quinnemanuel.com

Counsel for Amicus Curiae

[*Additional Counsel Listed on Inside Cover*]

WILSON-EPES PRINTING CO., INC. – (202) 789-0096 – WASHINGTON, D. C. 20002

DEREK L. SHAFFER
QUINN EMANUEL URQUHART
& SULLIVAN, LLP
777 6th St. NW
11th Floor
Washington, DC 20001
(202) 538-8000

KEVIN P.B. JOHNSON
CAROLYN H. THOMAS
QUINN EMANUEL URQUHART
& SULLIVAN, LLP
555 Twin Dolphin Dr.
5th Floor
Redwood Shores, CA 94065
(650) 801-5000

TABLE OF CONTENTS

	Page
INTEREST OF AMICUS CURIAE	1
SUMMARY OF ARGUMENT	2
ARGUMENT	4
I. THE OBJECTIVE REASONABLENESS TEST IS NECESSARY GIVEN THE PRACTICAL REALITIES OF PATENT LITIGATION AND THE PURPOSES OF PATENT LAW IN PROMOTING INNOVATION	4
A. The Objective Reasonableness Test Is Necessary To Encourage Companies To Challenge Invalid Patent Claims	5
B. Petitioners' Suggested Focus On Copying And Subjective Reasonableness Will Discourage Innovation	8
C. An Objective Analysis Of Asserted Defenses Is Necessary Because Of The Expense And Difficulty Of Predicting Patent Litigation	10
D. Petitioners' Suggested Focus On Whether Defendants Actually Contemplated Objectively Reasonable Defenses Prior To Litigation Creates Numerous Problems, Including For Attorney-Client Privilege	15

TABLE OF CONTENTS—Continued

Page

II. *DE NOVO* REVIEW IS NECESSARY TO ENSURE THE FAIR AND CONSISTENT APPLICATION OF PATENT LAW AND TO PROTECT AGAINST OUTSIZED DAMAGE AWARDS 17

III. *CMU v. MARVELL* PROVIDES A PERFECT EXAMPLE OF THE NEED FOR AN OBJECTIVE STANDARD FOR ENHANCED DAMAGES 20

CONCLUSION 26

TABLE OF AUTHORITIES

CASES	Page(s)
Alvarez v. IBP, Inc., 339 F.3d 894 (9th Cir. 2003)	17, 18
Amazon.com, Inc. v. Barnesandnoble.com, Inc., 239 F.3d 1343 (Fed. Cir. 2001)	13
Ass'n for Molecular Pathology v. Myriad Genetics, Inc., 133 S. Ct. 2107 (2013)	6
Bard Peripheral Vascular, Inc. v. W.L. Gore & Assocs., Inc., 682 F.3d 1003 (Fed. Cir. 2012)	17
Bilski v. Kappos, 561 U.S. 593 (2010)	6
CMU v. Marvell Tech. Group, Ltd., 888 F. Supp. 2d 637 (W.D. Pa. 2012)	22
CMU v. Marvell Tech. Group, Ltd., 986 F. Supp. 2d 574 (2013)	21, 23
CMU v. Marvell Tech. Group, Ltd., 2011 WL 4527353 (W.D. Pa. Sept. 28, 2011)	22
CMU v. Marvell Tech. Group, Ltd., 2013 WL 4511293 (W.D. Pa. Aug. 23, 2013)	22
CMU v. Marvell Tech. Group, Ltd., 2014 WL 1320154 (W.D. Pa. Mar. 31, 2014)	24

TABLE OF AUTHORITIES—Continued

Page(s)

CMU v. Marvell Tech. Group, Ltd.,
2014 WL 183212 (W.D. Pa. Jan. 14, 2014) 21, 22

CMU v. Marvell Tech. Group, Ltd.,
805 F.3d 1382 (Fed. Cir. 2015) 1

CMU v. Marvell Tech. Group, Ltd.,
807 F.3d 1283 (Fed. Cir. 2015) 1, 24

Cooper Indus., Inc. v. Leatherman Tool Group, Inc.,
532 U.S. 424 (2001) 20

Davila v. Menendez,
717 F.3d 1179 (11th Cir. 2013) 18

Harper & Row Publishers, Inc. v. Nation Enters.,
471 U.S. 539 (1985) 17

Highmark Inc. v. Allcare Health Management System, Inc.,
134 S. Ct. 1744 (2014) 19, 20

Kimble v. Marvel Ent., LLC.,
135 S. Ct. 2401 (2015) 7

Knorr-Bremse Systeme Fuer Nutzfahrzeuge GmbH v. Dana Corp.,
383 F.3d 1337 (Fed. Cir. 2004) 15

Markman v. Westview Instruments, Inc.,
517 U.S. 370 (1996) 12

Medtronic, Inc. v. Mirowski Family Ventures,
134 S. Ct. 843 (2014) 6

TABLE OF AUTHORITIES—Continued

Page(s)

Nautilus, Inc. v. Biosig Instruments, Inc.,
134 S. Ct. 2120 (2014) 13

Octane Fitness, LLC v. ICON Health & Fitness,
134 S. Ct. 1749 (2014) 19, 20

In re Seagate,
497 F.3d 1360 (Fed. Cir. 2007) 2, 5, 15, 19

Slimfold Mfg. Co. v. Kinkead Indus., Inc.,
932 F.2d 1453 (Fed. Cir. 1991) 8

State Farm Mut. Automobile Ins. Co. v. Campbell,
538 U.S. 408 (2003) 20

Teva Pharm. USA, Inc. v. Sandoz, Inc.,
135 S. Ct. 831 (2015) 17

TiVo Inc. v. Echostar Corp.,
646 F.3d 869 (Fed. Cir. 2011) 8

TrafFix Devices, Inc. v. Mktg. Displays, Inc.,
532 U.S. 23 (2001) 8

Wm. Wrigley Jr. Co. v. Cadbury Adams USA LLC,
683 F.3d 1356 (Fed. Cir. 2012) 9

STATUTES

35 U.S.C. § 283 15

35 U.S.C. § 284 15

35 U.S.C. § 289 15

35 U.S.C. § 298 ..... 3, 16, 22

TABLE OF AUTHORITIES—Continued

Page(s)

U.S. Const. art. I, § 8, cl. 8 5

MISCELLANEOUS

AMERICAN INTELLECTUAL PROPERTY LAW ASSOCIATION, REPORT OF THE ECONOMIC SURVEY (2013) 10, 11

Amy Simpson & Hwa Lee, *PTAB Kill Rates: How IPRs are Affecting Patents*, LAW360 (Sept. 15, 2015), http://www.law360.com/articles/699860/ptab-kill-rates-how-iprs-are-affecting-patents..... 6

Daniel O'Connor, *One In Six Active U.S. Patents Pertain To The Smartphone*, DISCO (Oct. 17, 2012), http://www.project-disco.org/intellectual-property/one-in-six-active-u-s-patents-pertain-to-the-smart phone 10

James R. Barney and Charles T. Collins-Chase, *An Empirical Analysis of District Court Claim Construction, January to December 2009*, 2011 STAN. TECH. L. REV. 2 13

Justin P Huddleson, Note, *Objectively Reckless: A Semi-Empirical Evaluation of In re Seagate*, 15 B.U. J. SCI. & TECH. L. 102 (2009) 19

Kimberly A. Moore, *Empirical Statistics on Willful Patent Infringement*, 14 FED. CIR. BAR J. 227 (2004) 11

TABLE OF AUTHORITIES—Continued

Page(s)

Kimberly A. Moore, *Judges, Juries, and Patent Cases an Empirical Peek Inside the Black Box*, 11 FED. CIR. BAR J. 209 (2002) 5

Kimberly A. Moore, *Xenophobia in American Courts*, 97 NW. U. L. REV. 1497 (2003) 19

A PATENT SYSTEM FOR THE 21ST CENTURY: COMMITTEE ON INTELLECTUAL PROPERTY RIGHTS IN THE KNOWLEDGE-BASED ECONOMY (Steven A. Merrill et al. eds., 2004) 11

Thomson Reuters, *Top 100 Global Innovators: Marvell, available at* http://top100innovators.stateofinnovation.thomsonreuters.com/ content/marvell 1

INTEREST OF AMICUS CURIAE[1]

Founded in Silicon Valley more than twenty years ago, Marvell Semiconductor, Inc. ("Marvell") is a recognized top innovator, employing thousands of people with heavy investment in semiconductor research and development reflected in tangible semiconductor chips, and it has developed a large patent portfolio. *See* Thomson Reuters, *Top 100 Global Innovators: Marvell*, *available at* http://top100innovators.stateofinnovation.thomsonreuters.com/content/marvell. In litigation brought by Carnegie Mellon University ("CMU") against Marvell, the Federal Circuit ruled that Marvell did not willfully infringe CMU's patents, and reversed the district court's award of $287 million in enhanced damages. *See CMU v. Marvell Tech. Group, Ltd.*, 807 F.3d 1283, 1292, 1301-02 (Fed. Cir. 2015). The *en banc* Federal Circuit has held that decision in abeyance pending this Court's resolution of these consolidated cases. *See CMU v. Marvell Tech. Group, Ltd.*, 805 F.3d 1382, 1382-83 (Fed. Cir. 2015). The development of the law regarding enhanced damages has real and enormous consequences for operating companies like Marvell.

---

[1] Pursuant to this Court's Rule 37.6, Marvell states that no counsel for any party authored this brief in whole or in part. No entity or person, aside from Marvell and its counsel, made any monetary contribution toward the preparation or submission of this brief. Pursuant to this Court's Rule 37.3(a), Marvell notes that all parties in the consolidated cases have consented to the filing of this brief; their consents have been filed with the Clerk of this Court.

SUMMARY OF ARGUMENT

The objective test for willfulness, with *de novo* review, is necessary to promote the public interest in innovation that is at the heart of the patent laws.

I. Discarding the objective reasonableness test would cause an explosion in enhanced damages. Prior to *Seagate*, district courts found that infringers acted willfully in the *majority* of cases and usually awarded enhanced damages in those cases. Notwithstanding the assertions of Petitioners and the United States that their undefined, multi-factor tests can limit enhanced damages to only the egregious cases, experience shows that their tests will fail to do so. The practical reality is that only an objective test can ensure that enhanced damages do not become the norm once again, a result that would substantially harm the public interest in several ways.

First, Petitioners' approach would harm the public interest in challenging potentially invalid patent claims. The proliferation of invalid patent claims has a harmful effect on innovation by making it seem, incorrectly, as though certain features are off limits for competition. There is a public interest in challenging invalid patent claims. Indeed, even when the challenge fails, it often benefits the public by defining the scope of a valid patent. Accordingly, there is no legitimate basis for punishing companies with enhanced damages where they have a strong (though unsuccessful) claim for invalidity.

Second, Petitioners' approach would discourage reasonable attempts to design around patents. Petitioners treat copying and design-around as a basis for enhanced damages. But attempts to design around patents are a critical part of the process of innovation.

They also advance the public notice function of patents.

Third, Petitioners' approach would force companies to spend an enormous amount of money to investigate every possible claim against them. Moreover, even these exhaustive investigations would be inadequate to protect against enhanced damages. The practical reality of patent litigation is that defenses depend on which claims are asserted, how they are construed, how experts interpret the prior art, and many other circumstances that are inherently unpredictable prior to litigation. Thus, there is no legitimate basis for punishing a company for being unable to figure out its best possible defense before litigation commences.

Fourth, Petitioners' approach would improperly punish companies for their litigation strategy, and in particular for exercising attorney-client privilege. While the America Invents Act ("AIA") does not allow the failure to obtain advice of counsel to be used as proof of willfulness, *see* 35 U.S.C. § 298, Petitioners' approach puts the burden on defendants to show that they knew of a defense prior to suit. And there will often be no way of doing so without waiving attorney-client privilege, precisely the situation that Congress intended to prevent.

II. *De novo* review is required as a legal matter and provides a crucial check on district courts. In particular, the Federal Circuit's repeat experience with patent cases positions that court well to evaluate whether a party was objectively willful. The *de novo* standard of review also protects against the inconsistent and excessive use of enhanced damages by district courts. In contrast, the abuse-of-discretion standard advocated by Petitioners and the United

States would exacerbate the harm to innovation that comes from their removal of an objective test.

III. The *CMU v. Marvell* case demonstrates what would likely happen if this Court discards the objective reasonableness test for enhanced damages. The district court there awarded $287 million in enhanced damages to CMU even though it had recognized at summary judgment that the validity of CMU's patented method was a "close case," and even though Marvell prevailed on summary judgment of non-infringement on the majority of the asserted claims. The only reason Marvell did not face a $287 million punishment for being unable to predict the outcome of a close case on invalidity and a jury verdict on infringement is that the Federal Circuit reversed on the issue of objective willfulness. That check on jury and district court enhanced damages awards should remain in place.

ARGUMENT

I. THE OBJECTIVE REASONABLENESS TEST IS NECESSARY GIVEN THE PRACTICAL REALITIES OF PATENT LITIGATION AND THE PURPOSES OF PATENT LAW IN PROMOTING INNOVATION

If the objective reasonableness test is discarded, infringers will routinely face enhanced damages. Petitioners seem to recognize that enhanced damages should not be awarded in most or all cases. *See* Halo Pet'r Br. at 28-29; Stryker Pet'r Br. at 35. The United States goes even further and insists that enhanced damages should be limited to the "most egregious" cases. U.S. Br. at 9. But the amorphous, multi-factor, discretionary tests they put forward will do nothing in

practice to restrain enhanced damages awards to egregious cases.

This is not mere speculation. Before *In re Seagate*, 497 F.3d 1360 (Fed. Cir. 2007), adopted the test of objective willfulness subject to *de novo* review, willfulness was found in the *majority* of cases of infringement. *See* Kimberly A. Moore, *Judges, Juries, and Patent Cases — an Empirical Peek Inside the Black Box*, 11 FED. CIR. BAR J. 209, 240 (2002) (1983-99 study concluding that juries found willfulness in 71% of cases and judges found willfulness in 53% of cases). And because review was only for abuse of discretion, these findings were affirmed 85% of the time. *Id.* at 248. There is no conceivable theory under which the majority of infringers deserve enhanced damages, or that such routine enhancement serves the public interest rather than acting as a windfall for patentees, many of them non-practicing entities. In particular, the objective reasonableness test adopted by the Federal Circuit serves the public interest in challenging invalid patent claims, promoting innovation, and protecting attorney-client privilege.

A. The Objective Reasonableness Test Is Necessary To Encourage Companies To Challenge Invalid Patent Claims

The core constitutional purpose of the United States' intellectual property law is "[t]o promote the Progress of Science and useful Arts, by securing for limited Times to Authors and Inventors the exclusive Right to their respective Writings and Discoveries." U.S. Const. art. I, § 8, cl. 8. That goal of promoting innovation is stifled by the proliferation of invalid patent claims.

It is well established that the exponential growth in patents has been accompanied by a similar growth in patents that actually have invalid claims. For instance, in inter parties review proceedings under the AIA, 88% of patents reviewed by Patent Trial and Appeal Board from 2012-2015 had at least one claim found invalid. *See* Amy Simpson & Hwa Lee, *PTAB Kill Rates: How IPRs are Affecting Patents*, LAW360 (Sept. 15, 2015), http://www.law360.com/articles/699860/ptab-kill-rates-how-iprs-are-affecting-patents.

This Court has long recognized that it is in the public interest for invalid patent claims to be challenged. The public "has a paramount interest in seeing that patent monopolies are kept within their legitimate scope." *Medtronic, Inc. v. Mirowski Family Ventures*, 134 S. Ct. 843, 851-52 (2014) (internal citations and quotation marks omitted). Over-patenting can "tie up" "the basic tools of scientific and technological work," presenting a significant danger of "inhibit[ing] future innovation premised upon them." *Ass'n for Molecular Pathology v. Myriad Genetics, Inc.*, 133 S. Ct. 2107, 2116 (2013) (internal citations and quotation marks omitted). Such restraints are "at odds with the very point of patents, which exist to promote creation." *Id.*

Successful invalidity challenges prevent inappropriate monopolies and increase the body of knowledge freely available to all. "If a high enough bar is not set" for determining what constitutes true innovation, "patent examiners and courts could be flooded with claims that would put a chill on creative endeavor and dynamic change." *Bilski v. Kappos*, 561 U.S. 593, 608 (2010). "Allowing even a single company to restrict its use of an expired or invalid patent deprive[s] the consuming public of the advantage to be derived from

free exploitation of the discovery." *Kimble v. Marvel Ent., LLC.*, 135 S. Ct. 2401, 2407 (2015) (internal formatting omitted).

If enhanced damages are available even where the defendant presents a reasonable invalidity defense at trial, then that would chill companies from challenging patents. The potential risk of losing not just the damages proven by the plaintiffs, but as much as three times that amount, will be a substantial disincentive to defendants to litigate patent claims rather than succumbing to unwarranted settlements. And it does not suffice to say that district courts can exercise discretion: the question of subjective reasonableness is too ambiguous and arbitrary to provide any assurance to defendants.

Moreover, the public interest in challenging invalid patent claims exists regardless of *when* a defendant company formulates its invalidity theory. The current objective reasonableness test for willful infringement facilitates such challenges—it encourages defendants to formulate strong invalidity challenges even after litigation commences. If successful, more knowledge is open to the public; if the challenge is strong but ultimately unsuccessful, that too provides further knowledge to the public about the scope of the patented claims, while also preventing the defendant from paying up to treble the actual damages. And, of course, the patentee still receives the damages to which it is entitled—the only thing it does not receive is a windfall in the form of a multiple of those damages.

B. Petitioners' Suggested Focus On Copying And Subjective Reasonableness Will Discourage Innovation

Petitioners and the United States focus on "copying" as a key basis for imposing enhanced damages. But this focus is misplaced: designing around is crucial to innovation, and there is no basis for imposing enhanced damages when a company is mistaken about the success of its design-around.

The public interest favors attempts to design around (and thus not infringe) valid claims. Innovation is iterative; engineers who work towards and create alternatives to patent-protected solutions are themselves expanding the sum of human knowledge. When innovators start from a patented solution, in an attempt to understand but then diverge from it, they are furthering the purposes of the Patent Act, not inhibiting it. After all, "[d]esigning around patents is, in fact, one of the ways in which the patent system works to the advantage of the public in promoting progress in the useful arts, its constitutional purpose." *Slimfold Mfg. Co. v. Kinkead Indus., Inc.*, 932 F.2d 1453, 1457 (Fed. Cir. 1991); *see also TiVo Inc. v. Echostar Corp.*, 646 F.3d 869, 883 (Fed. Cir. 2011) ("[D]esign-around efforts should always be encouraged as a path to spur further innovation.").

So-called "copying" can be a legitimate part of the design-around process. "Allowing competitors to copy will have salutary effects in many instances." *TrafFix Devices, Inc. v. Mktg. Displays, Inc.*, 532 U.S. 23, 29 (2001). For example, "[r]everse engineering of chemical and mechanical articles in the public domain often leads to significant advances in technology." *Id.* (quoting *Bonito Boats, Inc. v. Thunder Craft Boats, Inc.*, 489 U. S. 141, 160 (1989)). A company may start

by "copying" a patent, but in the end achieve its own solution based on non-protected components, thereby avoiding infringement of the novel components of the asserted patent. The Federal Circuit has explained that copying may well indicate fair competition—copying is only unlawful if there is "a nexus between the copying and the novel aspects of the claimed invention." *Wm. Wrigley Jr. Co. v. Cadbury Adams USA LLC*, 683 F.3d 1356, 1364 (Fed. Cir. 2012).

Petitioners' approach of focusing on "copying" as a basis for enhanced damages would ignore these important policies and thus frustrate the incentives for innovation in the Patent Act. For purposes of assessing willfulness, there is a great distance between, on the one hand, a defendant that can muster no serious invalidity challenge and made no attempt to differentiate its product from a patented solution, and on the other, a company that attempted to use non-protected building blocks and its own ingenuity in developing a distinct solution. Even if the latter solution may ultimately be determined by a lay jury to have fallen within the scope of the original patented claims, such attempts to design around should be encouraged.

To be sure, a company that does nothing more than copy a patented feature, with no reasonable defense of invalidity or non-infringement, should be subject to the potential for enhanced damages. But that company will already be subject to enhanced damages under an objective test since a mere copy will have no reasonable defense of non-infringement. The proper way of ensuring that true copiers of a patented feature are punished, but companies that make a real effort to design around are not, is to look objectively at the technical merits of the defendant's actions to

determine whether there is a reasonable defense of invalidity or non-infringement, even if that look takes place in litigation.

C. An Objective Analysis Of Asserted Defenses Is Necessary Because Of The Expense And Difficulty Of Predicting Patent Litigation

Petitioners and the United States assign great import to the timing of defendants' formulation of their invalidity and non-infringement defenses. They insist that if a defense was not formulated until after litigation commenced, it should not preclude enhancement of damages. This focus on timing, however, does not accord with the practice of patent litigation. It is not realistic for a company, prior to litigation, to develop every possible defense for every possible patent claim that can be asserted against it.

1. In the era of complex, multi-featured computing, high-tech products contain thousands of patented features. For example, as of 2012, the United States Patent and Trademark Office ("PTO") had issued more than 250,000 smartphone-related patents, constituting 16% of all active U.S. patents. *See* Daniel O'Connor, *One In Six Active U.S. Patents Pertain To The Smartphone*, DISCO (Oct. 17, 2012), http://www.project-disco.org/intellectual-property/one-in-six-active-u-s-patents-pertain-to-the-smartphone.

Companies that produce these high-tech products with thousands of features cannot proactively assess every patent that might conceivably apply to their products. The time and expense of such an undertaking would be prohibitive. Obtaining even a basic infringement and invalidity opinion typically costs $15,000 per patent, *see* AMERICAN INTELLECTUAL

PROPERTY LAW ASSOCIATION, REPORT OF THE ECONOMIC SURVEY (2013) at 27, and can exceed $50,000 or even $100,000 as claim complexity and potential exposure increases. *See, e.g.*, Kimberly A. Moore, *Empirical Statistics on Willful Patent Infringement*, 14 FED. CIR. BAR J. 227, 228 n.5 (2004) (collecting sources); A PATENT SYSTEM FOR THE 21ST CENTURY: COMMITTEE ON INTELLECTUAL PROPERTY RIGHTS IN THE KNOWLEDGE-BASED ECONOMY 119 (Steven A. Merrill et al. eds., 2004) (collecting sources). Investigating every patent with potential application to their products would require companies to divert enormous sums away from innovation and towards investigations.

Nor is it economically feasible for high-tech companies to investigate every patent of which they are specifically notified. It is standard practice for patent owners to send blanket licensing letters to every significant player in the industry. Investigating even this smaller set of patents would be prohibitively expensive.

When reviewing these patent licensing offers, the lines are often fuzzy between friendly offers, adversarial letters carefully worded to provide notice but still avoid declaratory judgment jurisdiction, and outright demands. Some letters are innocuous; others are precursors to infringement contentions. And a company cannot treat every such letter as a requirement to conduct a detailed investigation to predict the outcome of possible litigation.

It would be an enormous waste of resources for technology companies to conduct full investigations into every potentially applicable patent, and then be locked into the results of those investigations as the full extent of "objectively" reasonable defenses they

could assert in future litigation. The Federal Circuit's objective reasonableness test prevents such a needlessly expensive result: it allows companies to make reasoned real-time business judgments not to divert resources away from innovation and to hypothetical litigation, while still allowing a company once sued to fight with the full arsenal of defenses.

2. Not only would full investigations of every patent be prohibitively costly, they would still be woefully inadequate in actually allowing companies to determine all of their invalidity and non-infringement defenses, let alone predict their success.

First, a patent may contain dozens of different claims. Claims differ widely in the scope of their coverage. Some claims may be broad and therefore subject to a strong defense of invalidity. Some claims may be narrow and therefore subject to a strong defense of non-infringement. The defenses of non-infringement and invalidity often are interrelated, and interrelated across claims. It is therefore implausible and illogical to impose the burden on the company to determine all of the non-infringement and invalidity defenses for all of the potential permutations of claim assertions, all prior to litigation, where the identity of claims for trial becomes known.

Second, pre-suit investigations are necessarily speculative because claim construction is an issue the court will decide during the litigation. The first significant step in any patent litigation is to define what, exactly, the patent means. *See Markman v. Westview Instruments, Inc.*, 517 U.S. 370, 384-90 (1996). This patent claim construction process, litigated through the adversarial process and decided as a matter of law by the judge, has a dramatic impact on whether specific non-infringement and invalidity

arguments remain viable. Pragmatically, although patents are required to be "precise enough to afford clear notice of what is claimed, thereby apprising the public of what is still open to them," *Nautilus, Inc. v. Biosig Instruments, Inc.*, 134 S. Ct. 2120, 2129 (2014), that precision is often not actually obtained until after claim construction in active litigation. *See, e.g.*, James R. Barney and Charles T. Collins-Chase, *An Empirical Analysis of District Court Claim Construction, January to December 2009*, 2011 STAN. TECH. L. REV. 2, 3, *available at* http://stlr. stanford.edu/pdf/barney-collins-chase-claim–construc tion.pdf ("[I]t is sometimes necessary, during claim construction, to substitute new language for the actual language that was chosen by the patentee and allowed by the PTO.").

Neither patent owners nor defendant companies can truly understand a patent's scope and effect until after claim construction has occurred. Claims construed broadly are more open to invalidity challenges; claims construed narrowly are more open to non-infringement contentions. Claim construction often involves a careful threading of a needle: "A patent may not, like a 'nose of wax,' be twisted one way to avoid anticipation and another to find infringement." *Amazon.com, Inc. v. Barnesandnoble.com, Inc.*, 239 F.3d 1343, 1351 (Fed. Cir. 2001) (internal citations omitted). Thus, even for a company that expends the resources to conduct a pre-suit analysis of a patent, the company may have based its analysis on an incomplete or incorrect understanding of the patented claims. When that happens, the opinion itself—and the non-infringement and invalidity defenses it contemplates—can become meaningless because it lacks the benefit of a court's legal interpretation as to the patent's scope.

Third, there are many additional, unpredictable elements of patent litigation. There are questions regarding what prior art would have been known to people in the art; whether people in the art would have thought to combine different prior art; whether claim language is too indefinite; and whether the particular feature in the accused product falls within the claim language or construction. Many of these questions are factual ones, often leading to battles of the experts decided by juries. There is no practical way of guessing how juries will decide any, let alone all, of these questions.

Petitioners' approach does not account for these variables in evaluating the reasonableness of a companies' conduct. Petitioners' jettisoning of objective recklessness would force an absurd result: to avoid enhanced damages, companies would be required to spend significant resources guessing as to which patents it might be sued on, which claims of those patents will be asserted, how those claims will be construed by a judge, and what potential defenses it has based on those constructions. Only successful guesses would suffice to preclude willfulness and enhancement—no matter how strong the defenses a company might have after it knows which claims will be asserted and how they will be construed.

The practical reality is that, in many if not most cases, a company cannot determine prior to litigation, with any degree of certainty, which defenses will be good ones. There is no legitimate reason to punish companies for this uncertainty with enhanced damages. And there is also no reason to force companies to spend enormous sums on changing their products to avoid any possibility of infringement, on taking potentially extortionate licenses, or on

commissioning legal opinions so thorough that they resemble litigation itself. The cost of being wrong is already significant—the potential for damages measured by lost profits or reasonable royalties, and possibly an injunction. *See* 35 U.S.C. §§ 283, 284, 289. The addition of enhanced damages in most patent cases does nothing to serve the legitimate interests of the patent system.

D. Petitioners' Suggested Focus On Whether Defendants Actually Contemplated Objectively Reasonable Defenses Prior To Litigation Creates Numerous Problems, Including For Attorney-Client Privilege

Requiring subjective evidence of the timing of a defendant's investigation of a patent further frustrates public policy by impinging upon attorney-client relationships. As *Seagate* recognized, patent defendants typically investigate potential infringement and formulate their defenses through consultations with counsel. 497 F.3d at 1374. Even though the Federal Circuit has held that—in part due to privilege concerns—no adverse inference can be drawn from a defendant's "failure to obtain or produce an exculpatory opinion of counsel," *Knorr-Bremse Systeme Fuer Nutzfahrzeuge GmbH v. Dana Corp.*, 383 F.3d 1337, 1341 (Fed. Cir. 2004) (*en banc*), the reality has been that a jury could still hear evidence and argument on the lack of an opinion of counsel and use that evidence to support subjective willfulness. To be sure, the AIA now states that "[t]he failure of an infringer to obtain the advice of counsel with respect to any allegedly infringed patent, or the failure of the infringer to present such advice to the court or jury, may not be used to prove that the accused infringer

willfully infringed the patent." 35 U.S.C. § 298. However, under Petitioners' approach, this provision still fails to protect attorney-client privilege because Petitioners would hold willfulness not necessary for enhancement, and thus the lack of an opinion of counsel could still be used for enhancement, even if not for willfulness.[2]

Moreover, if the question is whether the defendant knew about a defense prior to suit and believed that defense would be successful, there is almost no way for a defendant to make that showing without providing an opinion of counsel and thereby waiving attorney-client privilege. Thus, imposing a requirement that a defense must have been contemplated prior to suit effectively requires defendants to waive privilege. The objective reasonableness inquiry exists, in part, to prevent Defendants from being put to such a Hobson's choice of either disclosing privileged pre-suit communications with counsel, or conceding the absence of an objectively reasonable defense.

The focus on the timing of when the defendant was aware of the defense also leads to other problems. For example, the defendant prior to suit might have thought it had a good defense based on certain prior art that made the patent claim obvious. During suit, however, based on further investigation or a particular claim construction, the defendant might determine that there is even better prior art to use in its defense. Does the defendant have to raise the weaker defense because only it will count for purposes of rebutting

---

[2] This argument also shows precisely why Congress must have intended willfulness to be a requirement for enhancement; otherwise, its protection for attorney-client privilege could be evaded by having it apply to some other basis for enhancement.

willfulness? For another example, imagine that substantial damages accrue during the suit. Should it matter precisely the date that the defendant came up with its reasonable but ultimately unsuccessful defense? And should any damages accruing after that date not count towards enhanced damages? And is there any way of getting at this number without the defendant disclosing its entire litigation strategy to the court? These examples are just a few of the many problems that arise when litigation strategy decisions become a tool for enhancing damages.

II. *DE NOVO* REVIEW IS NECESSARY TO ENSURE THE FAIR AND CONSISTENT APPLICATION OF PATENT LAW AND TO PROTECT AGAINST OUTSIZED DAMAGE AWARDS

The Federal Circuit's determination that objective reasonableness is a question of law that should be reviewed *de novo* is correct under this Court's precedents. This Court has recognized that *de novo* review applies to mixed questions of fact and of law. *See, e.g., Harper & Row Publishers, Inc. v. Nation Enters.*, 471 U.S. 539, 560 (1985) (copyright fair use defense); *Teva Pharm. USA, Inc. v. Sandoz, Inc.*, 135 S. Ct. 831, 841 (2015) (preserving *de novo* review for review of intrinsic claim construction evidence).[3] Objective willfulness is such a question here, *Bard Peripheral Vascular, Inc. v. W.L. Gore & Assocs., Inc.*, 682 F.3d 1003, 1005 (Fed. Cir. 2012), as courts have found in other contexts, *e.g.*, *Alvarez v. IBP, Inc.*, 339

---

[3] There may be underlying questions of fact relevant to the objective reasonableness analysis, *cf. Teva Pharm.*, 135 S. Ct. at 836-37, but the ultimate determination of objective reasonableness is still a legal one.

F.3d 894, 908 (9th Cir. 2003) (applying *de novo* review to willful violations of Fair Labor Standards Act), *aff'd*, 546 U.S. 21 (2005); *Davila v. Menendez*, 717 F.3d 1179, 1184 (11th Cir. 2013) (applying *de novo* review to willful violations of minimum wage laws).

As a practical matter, *de novo* review is appropriate given that the Federal Circuit, with its exclusive jurisdiction over patent appeals, can provide expertise and consistency in enhanced damages judgments.

First, the Federal Circuit's expertise makes it a better adjudicator than an array of district courts of whether enhanced damages are appropriate. As discussed above, the issues regarding claim construction, prior art, and legitimacy of design-around often involve highly technical questions of patent law and engineering. To be sure, district courts and juries do decide these questions in the first instance. But Congress created the Federal Circuit precisely to allow these technical questions to be decided by judges who can evaluate them with a greater level of expertise. Simply put, since the Federal Circuit decides *de novo* claim construction, validity, and substantial evidence for infringement, it also should decide whether defenses based on those legal determinations were strong enough to make enhanced damages unwarranted.

Second, the Federal Circuit's *de novo* review ensures a degree of consistency in the awards of enhanced damages. In particular, *de novo* review protects against inconsistent or unfair findings of willfulness that may favor local plaintiffs or plaintiffs that engage in forum shopping. Patent plaintiffs often choose their hometown as the venue for the litigation. And empirical studies show that in patent cases, there is a marked disadvantage for out-of-state or foreign

defendants. *See* Kimberly A. Moore, *Xenophobia in American Courts*, 97 NW. U. L. REV. 1497, 1519 (2003) ("In-state plaintiffs succeed against out-of-state defendants in 72% of the jury trials. Out-of-state plaintiffs who sue in-state defendants prevail in only 47% of the jury trials."). Forum shopping makes clear the danger of inconsistency in district courts' treatment of patent cases, as well as the need for the Federal Circuit to provide some consistency in results, which cannot be achieved if the Federal Circuit is limited to abuse-of-discretion review.

Third, relying on district courts with only abuse-of-discretion review will result in outsized damage awards. As discussed above, prior to *Seagate*, district courts found willfulness as a basis for enhancement in the majority of cases. *See supra* at 5. Even after *Seagate*, some district courts have attempted to award enhanced damages more broadly than allowed under the Federal Circuit's test for willfulness. *See* Justin P Huddleson, Note, *Objectively Reckless: A Semi-Empirical Evaluation of In re Seagate*, 15 B.U. J. SCI. & TECH. L. 102, 120 (2009) ("First, the Federal Circuit has taken a particularly critical view of willfulness and is intent on enforcing it. Second, and perhaps not surprisingly, not every district court follows this view."). Thus, *de novo* review is a crucial backstop to excessive awards.

Finally, it is important to contrast the discretion this Court held appropriate for attorney's fees with the discretion Petitioners seek over enhanced damages. In *Octane Fitness, LLC v. ICON Health & Fitness*, 134 S. Ct. 1749, 1756 (2014), and *Highmark Inc. v. Allcare Health Management System, Inc.*, 134 S. Ct. 1744, 1748 (2014), this Court held that district courts should have discretion to determine the exceptional cases for

which attorney's fees should be awarded. However, district courts in many areas of law exercise discretion to award attorney's fees. Discretion to treble damages based on unfettered judgment, by contrast, is not a typical function of the district court. And such discretion is inconsistent with this Court's recognition that "an award of punitive damages [must be] based upon an 'application of law, rather than a decisionmaker's caprice,'" which requires "appellate courts to conduct *de novo* review." *State Farm Mut. Automobile Ins. Co. v. Campbell*, 538 U.S. 408, 418 (2003) (quoting *Cooper Indus., Inc. v. Leatherman Tool Group, Inc.*, 532 U.S. 424, 436 (2001)). Moreover, shifting attorney's fees is a tool to rein in frivolous patent litigation, which can pose a threat to the public interest. In contrast, and as detailed above, the public interest supports any objectively reasonable challenge to patent claims. Thus, *Octane* and *Highmark* are not properly read to dictate any particular outcome here.

III. *CMU v. MARVELL* PROVIDES A PERFECT EXAMPLE OF THE NEED FOR AN OBJECTIVE STANDARD FOR ENHANCED DAMAGES

The litigation between CMU and Marvell demonstrates precisely why an objective test—reviewed *de novo* by the Federal Circuit—is necessary to ensure that patent holders do not receive windfalls at the expense of the public interest. In *CMU v. Marvell*, the district court awarded CMU a $287 million enhancement of damages, and the only check preventing that enhancement was the Federal Circuit's reversal based on the holding that Marvell had objectively reasonable defenses. The case therefore provides a window into what would happen if, as Petitioners advocate, district courts are given

free rein to decide damages enhancement. As shown below, what would happen is that companies like Marvell, acting in good faith to innovate in a legal climate with thousands of patents for a single product, will suffer unjust enhancements of damages with essentially no recourse.

1. In 2000, Marvell unveiled what would become its flagship product: a system-on-a-chip platform for the data storage industry.[4] Around the same time, while canvassing publicly available research on how to improve chips' ability to read densely packed data in hard-disk drives, a Marvell engineer read a paper by recent Carnegie Mellon University graduate Dr. Aleksandar Kavcic. *CMU v. Marvell Tech. Group, Ltd.*, 986 F. Supp. 2d 574, 592 (2013). Marvell determined that Kavcic's algorithmic method presented a theoretical solution to the problem of reducing media noise, *id.*, but that Kavcic's method was too complicated to be feasibly implemented in an actual silicon chip. 986 F. Supp. 2d at 628; *CMU v. Marvell Tech. Group, Ltd.*, 2014 WL 183212, at *4 (W.D. Pa. Jan. 14, 2014).

Marvell thereafter worked around Kavcic's method to develop a new, commercially viable solution. In 2002, Marvell filed a provisional patent application for Marvell's solution, expressly noting Kavcic's patent as a prior art reference. "Detection in the Presence of Media Noise," USPTO Provisional Patent Application No. 60/345,725 (Jan. 3, 2002). The PTO in 2005 awarded Marvell the patent, which cites Kavcic's 2001 and 2002 patents on the first page. *See* Detection in

---

[4] Press Release, Introduction of Industry's First System-On-Chip, (Sept. 20, 2000), http://www.marvell.com/company/news/pressDetail.do?releaseID=197.

the Presence of Media Noise, U.S. Patent No. 6,931,585 (Aug. 16, 2005).

In 2003, CMU wrote a "friendly letter" attempting to solicit licensing interest to Marvell and nine other companies. *CMU*, 2014 WL 183212, at *8. Only two wrote back; none took a license. *Id.* CMU did not further suggest, formally investigate, or pursue any claim of infringement over the next six years, suing Marvell only in March 2009. *Id.* at *8-12.

During the ensuing litigation, Marvell argued that its independently patented solution did not infringe CMU's asserted claims. The district court agreed in substantial part, granting Marvell's motion for summary judgment of non-infringement on the majority of CMU's asserted claims. *CMU v. Marvell Tech. Group, Ltd.*, 888 F. Supp. 2d 637 (W.D. Pa. 2012). As for the remaining asserted claims, Marvell argued that CMU's asserted patent claims were invalid as anticipated by a 1995 patent issued to Dr. Glen Worstell. On summary judgment, the court explained that invalidity "was a close call," *CMU v. Marvell Tech. Group, Ltd.*, 2011 WL 4527353, at *1 (W.D. Pa. Sept. 28, 2011), but rejected Marvell's argument nonetheless based in part on the court's claim construction of the term "function." *Id.* at *8-10.

The case proceeded to trial, where the judge instructed the jury that, in assessing willfulness, "you may consider as one factor the lack of evidence that Marvell obtained a competent legal opinion." *CMU v. Marvell Tech. Group, Ltd.*, 2013 WL 4511293, at *5 (W.D. Pa. Aug. 23, 2013).[5] CMU then repeatedly

---

[5] The district court held that 35 U.S.C. § 298 was inapplicable because it "only applies to any law suit commenced on or after January 14, 2013." *CMU*, 2013 WL 4511293, at *5 n.13.

referenced the lack of an opinion in closing arguments, asserting that, "when there's a possibility that you are infringing, a possibility that you are infringing on a patented invention, you're supposed to get an opinion from legal counsel to see if they're okay. You never saw such an opinion in this case." *Id.* at *6. Having heard these arguments, the jury determined that Marvell willfully infringed. *CMU*, 986 F. Supp. 2d at 623, 626. The jury further awarded CMU the maximum damages amount requested by CMU, $1.169 billion, which the district court upheld. *Id.* at 637, *vacated in part*, 807 F.3d at 1311.[6]

The district court, rather than providing any check on the jury's willfulness finding, found that Marvell's supposedly willful conduct supported enhanced damages. *Id.* at 660. The court asserted that evaluating the reasonableness of defenses was the jury's prerogative, and credited the jury's verdict. *Id.* at 626, 630-31. The court further explained that, because Marvell had not presented any proof that it subjectively envisioned its invalidity defense prior to suit, the defense could not be objectively reasonable. *See id.* at 630-31. On the issue of subjective willfulness, the court upheld the jury finding because Marvell had engaged in supposed copying. *Id.* at 632-33. In deciding the amount of the enhancement, the court subtracted the pre-suit damages from the post-

---

[6] This award was orders of magnitude greater than the value of the patent as established by any historical licensing. IBM, Seagate, and 3M licensed the patents by paying a $250,000 flat fee to license any CMU patent conceived during their relevant annual memberships in a CMU research center. 986 F. Supp. 2d 574 at 588-89. CMU offered to license one of the patents to Intel for a flat fee of $200,000; Intel declined. *Id.* at 590. And CMU estimated that it might license the relevant patents to Marvell for at most a $2 million annual fee. *Id.* at 654.

suit damages and multiplied by two. *CMU v. Marvell Tech. Group, Ltd.*, 2014 WL 1320154, at *25 (W.D. Pa. Mar. 31, 2014).

The Federal Circuit reversed the $287 million enhanced damages award, holding that "there was enough uncertainty about what Worstell discloses and what CMU's claims required that we cannot say that the defenses were objectively unreasonable." *CMU v. Marvell Tech. Group, Ltd.*, 807 F.3d 1283, 1301 (Fed. Cir. 2015). The Federal Circuit held that the district court erred by treating reasonableness as a fact question for the jury; by "rel[ying] on the proposition that it mattered whether Marvell developed its invalidity defense when undertaking its infringing activity"; and by "confin[ing] its consideration of Marvell's defenses to those raised at trial, excluding arguments presented earlier in the litigation, such as at the summary-judgment stage." *Id.*

2. This case illustrates a key failing in Petitioners' approach: they do not identify precisely what makes an infringer deserving of enhanced damages, or what conduct courts should try to discourage through enhanced damages. The result is that they propose a test whereby Marvell could have been subject to enhanced damages even though there was no legitimate reason to punish Marvell. Marvell's response to a "friendly" licensing letter was no different than any other industry peer. And its response to its own separately acquired knowledge of Kavcic's patents was to disclose publicly Kavcic's influence, while engineering a separate design, distinguishing Kavcic's method, and obtaining its own patents. When unexpectedly confronted with litigation six years after receiving CMU's "friendly" letter, Marvell presented

strong technical defenses, including a non-infringement defense that succeeded as to the majority of claims, as well as a "close call" invalidity defense that the Federal Circuit deemed objectively reasonable.

There is no theory of enhancement whereby Marvell's industry-standard behavior and strong technical defenses justify $287 million in enhanced damages. And yet, under Petitioners' approach, there could essentially be no recourse for a company like Marvell if such an outsized enhanced damages award were imposed. The district court could consider any factors to support enhancement, and its decision would be reviewed only for abuse of discretion (with no sense of how a district court can abuse its discretion given that the factors and their weighing are entirely unguided). Petitioners' standardless approach thereby fails to ensure that the punishment of enhanced damages is reasonable and falls only on those actually deserving of it.

As illustrated by *CMU v. Marvell*, Petitioners' approach also fails by punishing conduct that should be encouraged or, at a minimum, protected as a matter of law. In particular, a finding of willfulness would have punished Marvell for (1) challenging patent claims despite showing non-infringement as to the majority of asserted claims and a strong (though unsuccessful) invalidity defense; (2) attempting to design around a patent it acknowledged as prior art in its successful patent application because this was seen as a form of "copying"; (3) being unable to predict the district court's post-litigation claim construction of disputed terms; and (4) asserting attorney-client privilege. As discussed above, these are not issues unique to the *CMU v. Marvell* litigation. Rather, these problems are inherent in Petitioners' approach and

will have wide-ranging, negative consequences for the patent system and the economy as a whole.

CONCLUSION

The judgments of the Federal Circuit should be affirmed.

Respectfully submitted,

SUSAN ESTRICH
MICHAEL T. ZELLER
QUINN EMANUEL URQUHART & SULLIVAN, LLP
865 S. Figueroa St.
10th Floor
Los Angeles, CA 90017
(213) 443-3000

KATHLEEN M. SULLIVAN
Counsel of Record
EDWARD J. DEFRANCO
JOSEPH MILOWIC III
DAVID M. COOPER
QUINN EMANUEL URQUHART & SULLIVAN, LLP
51 Madison Avenue, 22nd Floor
New York, NY 10010
(212) 849-7000
kathleensullivan@quinnemanuel.com

DEREK L. SHAFFER
QUINN EMANUEL URQUHART & SULLIVAN, LLP
777 6th St. NW
11th Floor
Washington, DC 20001
(202) 538-8000

KEVIN P.B. JOHNSON
CAROLYN H. THOMAS
QUINN EMANUEL URQUHART & SULLIVAN, LLP
555 Twin Dolphin Dr.
5th Floor
Redwood Shores, CA 94065
(650) 801-5000

Counsel for Amicus Curiae

Nos. 14-1513; 14-1520

Supreme Court, U.S.
FILED
DEC 14 2015
OFFICE OF THE CLERK

IN THE

Supreme Court of the United States

HALO ELECTRONICS, INC., *et al.*,

Petitioners,

v.

PULSE ELECTRONICS, INC., *et al.*,

Respondents.

ON WRITS OF CERTIORARI TO THE UNITED STATES COURT OF APPEALS FOR THE FEDERAL CIRCUIT

BRIEF OF MENTOR GRAPHICS CORP., MICROSOFT CORP. AND SAP AMERICA, INC. AS *AMICI CURIAE* IN SUPPORT OF NEITHER PARTY

JOHN D. VANDENBERG
Counsel of Record
SALUMEH R. LOESCH
KLARQUIST SPARKMAN, LLP
121 S.W. Salmon Street, Suite 1600
Portland, Oregon 97204
(503) 595-5300
john.vandenberg@klarquist.com

Counsel for Amici Curiae

December 14, 2015

263032

COUNSEL PRESS
(800) 274-3321 • (800) 359-6859

TABLE OF CONTENTS

Page

TABLE OF CONTENTS i

TABLE OF CITED AUTHORITIES iii

INTEREST OF *AMICI CURIAE* 1

INTRODUCTION 1

SUMMARY OF ARGUMENT 4

ARGUMENT 5

I. THE COURT SHOULD RESTORE TRIAL JUDGES' DISCRETIONARY POWER TO INCREASE PATENT DAMAGES 5

A. Congress Granted Trial Judges The Discretionary Power To Award More Than The Actual Damages 5

B. The Federal Circuit Has Vetoed Much Of The Discretionary Power Congress Granted Trial Judges 8

C. The Policies That Have Guided This Court's Interpretation Of Other Patent Act Provisions Should Guide Its Interpretation Of This Provision 9

Table of Contents

Page

D. Trial Judges Should Consider The Behavior And Posture Of Both Parties 13

E. Trial Judges Should Consider The Parties' Behavior Both Pre-Complaint And Post-Complaint 16

F. Four Scenarios Illustrate Application Of These Guidelines 17

II. WILLFUL INFRINGEMENT IS NOT A JURY ISSUE 20

A. There Is No Statutory Right To A Jury Trial Of Willfulness.....20

B. There Is No Seventh Amendment Right To A Jury Trial Of Willfulness 20

1. Historically, Juries Apparently Did Not Decide Willfulness In A Patent Suit 21

2. Functionally, Juries Are Ill-Suited To Decide Willfulness In A Patent Suit.....23

C. The Federal Circuit Has Not Conducted The Required Seventh Amendment Analysis 26

CONCLUSION 27

TABLE OF CITED AUTHORITIES

Page

CASES

Aronson v. Quick Point Pencil Co.,
440 U.S. 257 (1979) 10

Birdsall v. Coolidge,
93 U.S. 64 (1876) 6, 14

Bonito Boats, Inc. v. Thunder Craft Boats, Inc.,
489 U.S. 141 (1989) 24-25

Clark v. Wooster,
119 U.S. 322 (1886) 15

Feltner v. Columbia Pictures Television, Inc.,
523 U.S. 340 (1998) 22

Gen. Motors Corp. v. Dailey,
93 F.2d 938 (6th Cir. 1937) 14

Halo Elecs., Inc. v. Pulse Elecs., Inc.,
769 F.3d 1371 (Fed. Cir. 2014) 27

Hammerquist v. Clarke's Sheet Metal, Inc.,
658 F.2d 1319 (9th Cir. 1981) 26

In re Seagate Tech., LLC,
497 F.3d 1360 (Fed. Cir. 2007) (en banc) ..... *passim*

Jurgens v. CBK, Ltd.,
80 F.3d 1566 (Fed. Cir. 1996) 27

Cited Authorities

Page

Lear, Inc. v. Adkins,
395 U.S. 653 (1969).....12

Markman v. Westview Instruments, Inc.,
517 U.S. 370 (1996).....20, 21, 23, 27

Mayo Collaborative Servs. v. Prometheus Labs., Inc.,
132 S. Ct. 1289 (2012).....10

Nautilus, Inc. v. Biosig Instruments, Inc.,
134 S. Ct. 2120 (2014).....11

Pfaff v. Wells Elecs., Inc.,
525 U.S. 55 (1998).....10

Read Corp. v. Portec, Inc.,
970 F.2d 816 (Fed. Cir. 1992).....9

Richardson v. Suzuki Motor Co.,
868 F.2d 1226 (Fed. Cir. 1989).....9, 26

Schwarzel v. Holenshade,
21 F. Cas. 772 (S.D. Ohio 1866) (No. 12,506).....13

Seymour v. McCormick,
57 U.S. 480 (1853).....6

Shiley, Inc. v. Bentley Labs., Inc.,
794 F.2d 1561 (Fed. Cir. 1986).....26

Cited Authorities

Page

Smith v. Wade,
461 U.S. 30 (1983) 13

Swofford v. B&W, Inc.,
336 F.2d 406 (5th Cir. 1964) 25, 26

Tull v. United States,
481 U.S. 412 (1987) 20-21, 27

Whittemore v. Cutter,
29 F. Cas. 1120 (C.C.D. Mass. 1813)
(No. 17,600) (Story, J.) 6

CONSTITUTIONAL PROVISIONS

U.S. Const. amend. VII. ..... *passim*

STATUTES

35 U.S.C. § 101 10

35 U.S.C. § 102 10

35 U.S.C. § 112 10

35 U.S.C. § 284 (2012) 4, 5, 8, 20

35 U.S.C. § 67 (1946 ed.) 8

35 U.S.C. § 70 (1946 ed.) 8

Page

Act of Apr. 10, 1790, ch. 7, § 4, 1 Stat. 109. . . . . .5, 6, 21

Act of Apr. 17, 1800, ch. 25, § 3, 2 Stat. 37, 38 6

Act of Aug. 1, 1946, ch. 726, § 1, 60 Stat. 778 8

Act of Feb. 18, 1922, ch. 58, § 8, 42 Stat. 389 8

Act of Feb. 21, 1793, ch. 11, § 5, 1 Stat. 318. 6

Act of July 19, 1952, ch. 950, 66 Stat. 792 8

Act of July 4, 1836, ch. 357, § 14, 5 Stat. 117. . . . . .6, 7

Act of July 8, 1870, ch. 230, § 55, 16 Stat. 198 7

Act of July 8, 1870, ch. 230, § 59, 16 Stat. 198 7

Act of Mar. 3, 1897, ch. 391, § 6, 29 Stat. 692 8

RULES

U.S. Sup. Ct. Rule 37.3 1

U.S. Sup. Ct. Rule 37.6 1

OTHER AUTHORITIES

7 Donald S. Chisum, *Chisum on Patents* § 20.03[4][b][vii] (2014). 26

Cited Authorities

Page

D. Dobbs, *Handbook on the Law of Remedies* 440 (1973) 13

John B. Pegram, *The Willful Infringement Dilemma and the 7th Amendment*, 86 J. Pat. & Trademark Off. Soc'y 271 (2004) 21

Mark A. Lemley, *Ignoring Patents*, 2008 Mich. St. L. Rev. 19 24

Janice M. Mueller, *Commentary: Willful Patent Infringement and the Federal Circuit's Pending En Banc Decision in Knorr-Bremse v. Dana Corp.*, 3 J. Marshall Rev. Intell. Prop. L. 218 (2004) 21

William C. Robinson, *The Law of Patents for Useful Inventions* § 1069 (1890).....13

INTEREST OF *AMICI CURIAE*[1]

Amici are innovative businesses with multiple roles in our patent system. Each seeks patents on its inventions, licenses its patents to others, and obtains licenses under others' patents. And, each has sued for and been sued for alleged patent infringement. The current state of the law of "willfulness" in patent cases disserves each of these roles in our patent system. It penalizes companies for seeking patents on their inventions and for licensing their patents, and rewards patent owners for silently watching an infringer's business grow for years before asserting infringement. *Amici* submit this brief to address these important threshold points not addressed by the parties.

INTRODUCTION

The Federal Circuit has eroded a 180-year old Congressional grant of discretionary power to trial judges in patent suits. That grant gives the trial judge, not the jury, discretion to award the owner of a patent more than its actual damages from the patent's infringement. This discretionary power can serve core public policies of our patent system, but only when exercised with sound judicial discretion in view of the relevant circumstances—many necessarily hidden from a jury. Yet, the Federal Circuit

---

1. Pursuant to Supreme Court Rule 37.6, counsel for *amici* represent that they authored this brief in its entirety and that none of the parties or their counsel, nor any other person or entity other than *amici*, or their counsel, made a monetary contribution intended to fund the preparation or submission of this brief. Pursuant to Supreme Court Rule 37.3, Petitioners and Respondents have each filed with the Clerk of the Court a letter granting blanket consent to the filing of *amicus* briefs, other than the Respondents in 14-1520. The consent from those Respondents is being submitted herewith.

requires trial judges to submit to the jury an important consideration in such a determination, *viz.*, whether the defendant had subjective intent to infringe. This and other restrictions imposed by the Federal Circuit have no basis in the statute or this Court's Seventh Amendment jurisprudence, and undermine core public policies of the patent system. Accordingly, this Court should restore a trial judge's discretionary power to award more than actual damages based on the judge's own assessment of the relevant circumstances.

In addition to overturning the Federal Circuit's error, the Court should guide trial judges in exercising their discretionary power. Such guidance is particularly needed because, while the Federal Circuit has strayed from the correct statutory interpretation, it was trying to solve real "practical concerns stemming from [its earlier] willfulness doctrine . . . ." *In re Seagate Tech., LLC*, 497 F.3d 1360, 1369 (Fed. Cir. 2007) (en banc). Specifically, the Court should guide trial judges to consider those circumstances relevant to the core public policies of our patent system—including the extent to which:

1. the patent owner:

    a. implemented a scientifically or commercially significant advance;

    b. made reasonable, clear, and consistent assertions about the patent's scope;

    c. diligently provided actual and clear notice of the alleged infringement;

d. acted reasonably to mitigate its damages from the infringement;

e. sued, when feasible, the source of the accused technology—best positioned to defend or change it—as opposed to a mere customer; and

f. was harmed by the infringement beyond the actual damages allowable under law;

2. the infringer:

a. independently developed its implementation, as opposed to copying the inventor's product or implementation details in the patent;

b. contributed to the public domain by invalidating claims or defeating overbroad assertions of claim scope;

c. made reasonable and diligent contentions that, if successful, would have contributed to the public domain;

d. made reasonable efforts to license the patent at a commercially reasonable price;

e. acted reasonably and diligently to work around a direct competitor's patent, once it became clear that the accused implementation likely infringed and would not be licensed; and

f. was economically prejudiced by the patent owner's undue delay providing actual and clear notice of the allegation of infringement; and

3. the patent owner and infringer:

a. acted reasonably in the litigation.

SUMMARY OF ARGUMENT

The parties focus too narrowly. Intertwined with the proper role of willfulness in a patent suit are the threshold questions of who decides willfulness—trial judge or jury—and what policies and circumstances are relevant when exercising the discretionary power to increase damages in a patent suit.

Congress has entrusted the power to award a patent owner more than its actual damages, to the sound discretion of the trial judge: "the court may increase the damages up to three times the amount found [by a jury] or assessed [by the court]." 35 U.S.C. § 284 (2012). And, for good reason. This discretionary power can serve core public policies of our patent system, but only when exercised with sound judicial discretion in view of the relevant circumstances.

The Federal Circuit, however, has vetoed much of this Congressional grant of discretionary power to trial judges. Its restrictions on the exercise of this power entrusted to trial judges harm our patent system by penalizing companies for seeking patents on their inventions and patent owners for licensing their patents,

and by rewarding patent owners for silently watching an infringer's business grow for years before asserting infringement.

This judicial veto is most evident in the Federal Circuit's requirement that trial judges give the issue of subjective willfulness to the jury—as the trial judges did in the two cases before the Court. This is error. The Federal Circuit has not justified this mandate under either the statute or the historical or functional analysis required by this Court's Seventh Amendment jurisprudence. These considerations demonstrate that willfulness was not a jury issue in a patent suit before adoption of the Seventh Amendment in 1791, U.S. Const. amend. VII, and should not be one today.

The Court should restore the trial judge's discretionary power to award more than the actual damages from patent infringement in view of the purposes of the patent system and the *trial judge*'s own determination of the relevant circumstances, including willfulness.

ARGUMENT

I. THE COURT SHOULD RESTORE TRIAL JUDGES' DISCRETIONARY POWER TO INCREASE PATENT DAMAGES.

A. Congress Granted Trial Judges The Discretionary Power To Award More Than The Actual Damages.

From our first Patent Act, Act of Apr. 10, 1790, ch. 7, § 4, 1 Stat. 109, 111, to today, 35 U.S.C. § 284 (2012),

juries have been limited to awarding actual damages, not punitive damages, for patent infringement. *See, e.g.*, *Birdsall v. Coolidge*, 93 U.S. 64, 64 (1876) ("[T]he jury are strictly limited in their finding to the actual damages which the plaintiff has sustained by the infringement"); *Seymour v. McCormick*, 57 U.S. 480, 489 (1853) ("[T]he Patent Act of 1836 confines the jury to the assessment of 'actual damages.'"); *Whittemore v. Cutter*, 29 F. Cas. 1120 (C.C.D. Mass. 1813) (No. 17,600) (Story, J.) (unlike some other torts, "only the actual damages sustained can be" awarded by the jury for patent infringement, which the court will then treble.)

In addition to the actual damages assessed by a jury, Congress initially provided that the infringer automatically "shall forfeit to the person aggrieved, the thing or things" that infringe. Act of Apr. 10, 1790, ch. 7, § 4, 1 Stat. 109, 111. Congress soon replaced this automatic-forfeiture provision with automatic trebling of the patent owner's actual damages. Act of Feb. 21, 1793, ch. 11, § 5, 1 Stat. 318, 322 ("pay to the patentee, a sum, that shall be at least equal to three times the price . . . which may be recovered"); Act of Apr. 17, 1800, ch. 25, § 3, 2 Stat. 37, 38 ("a sum equal to three times the actual damage sustained by such patentee"). But, in 1836, Congress replaced this automatic trebling with a more flexible tool to account for the circumstances of a particular action. Act of July 4, 1836, ch. 357, § 14, 5 Stat. 117, 123; *see In re Seagate Tech., LLC*, 497 F.3d 1360, 1378 (Fed. Cir. 2007) (en banc) (Gajarsa, J., concurring & Newman, J. joining) ("It would appear [from the legislative history], then, that the 1836 Act was intended to control not only the grant of unwarranted patents, but also to restore the flexibility of remedy that is the traditional judicial province.").

For 180 years, Congress has empowered trial judges to award in their discretion more than a patent owner's actual damages. While the exact language has varied slightly, Congress consistently has chosen not to expressly cabin the trial judge's discretion, beyond capping the total award to trebling of the actual damages:

1836: "[I]t shall be in the power of the court to render judgment for any sum above the amount found by [the] verdict as the actual damages sustained by the plaintiff, not exceeding three times the amount thereof, *according to the circumstances of the case* . . . ." Act of July 4, 1836, ch. 357, § 14, 5 Stat. 117, 123 (emphasis added).

1870: "[T]he *claimant* [complainant] shall be entitled to recover, in addition to the profits to be accounted for by the defendant, the damages the complainant has sustained thereby, and the court shall assess the same or cause the same to be assessed under its direction, and the court shall have the same powers to increase the same *in its discretion* that are given by this act to increase the damages found by verdicts in actions upon the case . . . ." Act of July 8, 1870, ch. 230, § 55, 16 Stat. 198, 206 (alteration in original) (second emphasis added).[2]

---

2. This section 55 concerned a suit in equity, but a counterpart for suits in law was similar: "And whenever in any such action a verdict shall be rendered for the plaintiff, the court *may* enter judgment thereon for any sum above the amount found by the verdict as the actual damages sustained, according to the circumstances of the case, not exceeding three times the amount of such verdict, together with costs." Act of July 8, 1870, ch. 230, § 59, 16 Stat. 198, 207 (emphasis added).

1897 and 1922: "[T]he complainant shall be entitled to recover, in addition to the profits to be accounted for by the defendant, the damages the complainant has sustained thereby; and the court shall assess the same or cause the same to be assessed under its direction. And the court shall have the same power to increase such damages, *in its discretion*, as is given to increase the damages found by verdicts in actions in the nature of actions of trespass upon the case." Act of Mar. 3, 1897, ch. 391, § 6, 29 Stat. 692, 694 (emphasis added); Act of Feb. 18, 1922, ch. 58, § 8, 42 Stat. 389, 392 (emphasis added).

1946: "The court shall assess said damages, or cause the same to be assessed, under its direction and shall have the same power to increase the assessed damages, *in its discretion*, as is given to increase the damages found by verdicts in actions in the nature of actions of trespass upon the case . . . ." Act of Aug. 1, 1946, ch. 726, § 1, 60 Stat. 778, 778 (codified at 35 U.S.C. § 70 (1946 ed.)) (emphasis added); *see also* 35 U.S.C. § 67 (1946 ed.) (counterpart provision for suits in law).

1952: "When the damages are not found by a jury, the court shall assess them. In either event the court *may* increase the damages up to three times the amount found or assessed." Act of July 19, 1952, ch. 950, 66 Stat. 792, 813 (codified at 35 U.S.C. § 284 (2012)) (emphasis added).

B. The Federal Circuit Has Vetoed Much Of The Discretionary Power Congress Granted Trial Judges.

The Federal Circuit has effectively vetoed much of this 180-year old statutory grant of discretionary power

to trial judges, imposing restrictions having no support in the statute.

First, the Federal Circuit has taken from trial judges one factor sometimes deemed dispositive of an increased-damages determination—subjective willfulness of the infringement. *Richardson v. Suzuki Motor Co.*, 868 F.2d 1226, 1250 (Fed. Cir. 1989) (holding that a patent owner has the right to jury trial of the issue of willfulness).

Second, the Federal Circuit has restricted trial judges from relying on an infringer's post-complaint positions and behavior in certain circumstances. *Seagate Tech.*, 497 F.3d at 1374.

Third, when reviewing trial judges' increased-damages determinations, the Federal Circuit considers only the infringer's behavior, without balancing it with the patent owner's behavior. *See Read Corp. v. Portec, Inc.*, 970 F.2d 816, 826-28 (Fed. Cir. 1992).

C. The Policies That Have Guided This Court's Interpretation Of Other Patent Act Provisions Should Guide Its Interpretation Of This Provision.

This Court again is called upon to interpret a provision of the Patent Act. When interpreting its provisions, this Court consistently has considered the entire statutory framework and its delicate balance among the competing public interests of (1) the would-be inventor lured by the promise of patent exclusivity; (2) the subsequent artisan seeking to build on previous advances either by licensing patented technology at a fair price or inventing around the

patent; and (3) the public desiring unencumbered use of the public domain. *See Aronson v. Quick Point Pencil Co.*, 440 U.S. 257, 262 (1979). The Court has cited this delicate balance again and again when interpreting the Patent Act, including its following three conditions for patentability:

Section 102: "[T]he patent system represents a carefully crafted bargain that encourages both the creation and the public disclosure of new and useful advances in technology, in return for an exclusive monopoly for a limited period of time. The balance between the interest in motivating innovation and enlightenment by rewarding invention with patent protection on the one hand, and the interest in avoiding monopolies that unnecessarily stifle competition on the other, has been a feature of the federal patent laws since their inception." *Pfaff v. Wells Elecs., Inc.*, 525 U.S. 55, 63 (1998).

Section 101: "Patent protection is, after all, a two-edged sword. On the one hand, the promise of exclusive rights provides monetary incentives that lead to creation, invention, and discovery. On the other hand, that very exclusivity can impede the flow of information that might permit, indeed spur, invention, by, for example, raising the price of using the patented ideas once created, requiring potential users to conduct costly and time-consuming searches of existing patents and pending patent applications, and requiring the negotiation of complex licensing arrangements." *Mayo Collaborative Servs. v. Prometheus Labs., Inc.*, 132 S. Ct. 1289, 1305 (2012).

Section 112: "Section 112, we have said, entails a 'delicate balance.' On the one hand, the definiteness requirement must take into account the inherent

limitations of language. Some modicum of uncertainty, the Court has recognized, is the 'price of ensuring the appropriate incentives for innovation.' . . . At the same time, a patent must be precise enough to afford clear notice of what is claimed, thereby "appris[ing] the public of what is still open to them." Otherwise there would be '[a] zone of uncertainty which enterprise and experimentation may enter only at the risk of infringement claims.'" *Nautilus, Inc. v. Biosig Instruments, Inc.*, 134 S. Ct. 2120, 2128, 2129 (2014) (citations omitted).

The Patent Act—including its grant of a discretionary power to trial judges to award more than actual damages—serves these competing public interests by simultaneously advancing three core policies.

First, a primary purpose of our patent system is to spur invention and public disclosure of inventions by promising patent owners substantial economic advantages. Granting trial judges the discretionary power to award more than actual damages advances this core purpose. Without it, the expense, burden and uncertainties of patent litigation too often would negate the economic incentives of an award of actual damages, thereby diluting the incentive to invent and seek patents disclosing those inventions.

Second, an equally important purpose of granting a patent—with clearly demarked boundaries—is to give others an economic incentive to innovate in the same area. Sometimes others are willing to pay a fair price for a license to build upon previous inventions, but they also are motivated to invent around the patent to avoid that cost. Granting trial judges the discretionary power to increase damages advances this core purpose also. For

example, among the factors trial courts should consider are (1) whether the infringer independently developed its product versus slavishly copied the patent owner's implementation, and (2) whether the patent owner strategically watched in silence as the infringer built its own innovations atop a feature the patent owner only later accused of infringement.

Third, there is a strong public policy that interested parties, including competitors and even patent licensees, be able to challenge the validity and scope of patent monopolies, in order to return to the public domain whatever the patent (or unreasonable assertions of the patent) had wrongly clouded or taken outright. For example, "the important public interest in permitting full and free competition in the use of ideas which are in reality a part of the public domain," led the Court to permit patent licensees to challenge validity because otherwise, "[i]f they are muzzled, the public may continually be required to pay tribute to would-be monopolists without need or justification." *Lear, Inc. v. Adkins*, 395 U.S. 653, 670 (1969). Granting trial judges the discretionary power to award more than actual damages advances this core purpose as well. For example, trial judges should consider whether the infringer presented a strong challenge to the validity or scope of some of the patent claims, and whether the patent owner asserted an unreasonably broad scope of some of the patent claims.

In sum, just as these core public policies guide the interpretation and application of the statutory conditions for patentability, so too should they guide the interpretation and application of Congress's grant to trial judges of the discretionary power to award more than actual damages.

D. Trial Judges Should Consider The Behavior And Posture Of Both Parties.

Although designed primarily to punish and deter wanton infringement, the discretionary power Congress first granted trial judges in 1836 to award more than actual damages is not a "punitive damages" provision *per se*. *Smith v. Wade*, 461 U.S. 30, 36 n.5 (1983) (noting that the 1870 Patent Act's discretionary increased-damages provision did not "enact[] a punitive damages remedy as such, although [it] did create other forms of punitive civil remedies . . . not available at common law"). Rather, this discretionary power has a broader design and use. Under certain limited circumstances, it can compensate patent owners for losses not properly considered actual damages. "In order to provide for cases in which a verdict for the actual damages sustained would not afford complete redress to the plaintiff, the law empowers the court to increase the award of the jury to an amount not exceeding three times that fixed by the verdict." William C. Robinson, *The Law of Patents for Useful Inventions* § 1069 (1890) (citations omitted); *accord* D. Dobbs, *Handbook on the Law of Remedies* 440 (1973) ("This authority has been used partly as a penalty, as where it is thought that the defendant acted in bad faith, but it is clear that the provision permits an increase in damages to cover the possibility that assessed damages are insufficient because of proof difficulties.").

Accordingly, trial judges exercising this discretionary power considered the behavior and posture of *both* parties. In *Schwarzel v. Holenshade*, 21 F. Cas. 772, 773 (S.D. Ohio 1866) (No. 12,506), an exclusive licensee of a patent for a particular territory moved under the 1836

Act for trebling the damages awarded by the jury. The trial judge declined, noting that the plaintiff was not one who had toiled to make the invention practically useful but rather had purchased its license under the patent. *Id.* The trial judge cited as relevant factors the value of the improvement, the plaintiff's efforts to make it practically useful, whether the defendant's infringement was wanton and unjust, and whether the litigation was long and vexatious—all to determine whether "the sum that may be awarded by the verdict of a jury may be wholly inadequate as a compensation for the wrongs and injuries [plaintiff] has sustained." *Id. See also Gen. Motors Corp. v. Dailey*, 93 F.2d 938, 942 (6th Cir. 1937) (affirming denial of increased damages in part because the patent owner had delayed filing suit).

This Court likewise recognized that the Congressional purpose in empowering trial judges to award more than actual damages was broader than punishing wanton infringement. The Court identified some circumstances where this power of trial judges might be required to supplement the actual damages then allowable under the law: "Examples of the kind may be mentioned where the business of the infringer was so improvidently conducted that it did not yield any substantial profits, and cases where the products of the patented improvements were sold greatly below their just and market value, in order to compel the owner of the patent, his assignees and licensees, to abandon the manufacture of the patented product." *Birdsall*, 93 U.S. at 69. The Court later identified further circumstances: "the expense and trouble the plaintiff has been put to by the defendant, and any special inconvenience he has suffered from the wrongful acts of the defendant" cannot be awarded as part of actual

damages, "but these are more properly the subjects of allowance by the court, under the authority given to it to increase the damages." *Clark v. Wooster*, 119 U.S. 322, 326 (1886).

The legislative history of the 1836 Act supports this widely held Nineteenth Century view of the purposes behind Congress's grant to trial judges of the discretionary power to award more than actual damages. In part, Congress moved from automatic trebling of damages to a discretionary power to increase damages, in response to abusive litigation under the former automatic-trebling statute. *See Seagate Tech.*, 497 F.3d at 1377-78 (Gajarsa, J., concurring & Newman, J. joining) (citing legislative history criticizing pre-1836 patent law "which led to abusive wielding of the treble-damages club by undeserving patentees").

Consistent with both this history and the core public policies of our patent system, trial judges should consider, among other things, the extent to which the patent owner implemented the patented invention; acted diligently to notify the infringer of the allegation of infringement; and took reasonable and clear positions as to the scope of its asserted patent. And trial judges should consider the extent to which the infringer successfully narrowed the asserted scope of the asserted patent or invalidated some claims thereof; and either engaged in independent development or made a legitimate effort to invent around the asserted patent once it became clear that infringement was likely and a license was unavailable at a price it was willing to pay. Only by considering these and the other relevant circumstances identified *supra* in the Introduction, will trial judges' exercise of this

discretionary power advance the public policies embedded in the Patent Act.

E. Trial Judges Should Consider The Parties' Behavior Both Pre-Complaint And Post-Complaint.

The Federal Circuit has restricted trial judges' discretion to consider an infringer's post-complaint actions as part of an enhanced-damages determination: "when an accused infringer's post-filing conduct is reckless, a patentee can move for a preliminary injunction, which generally provides an adequate remedy for combating post-filing willful infringement. A patentee who does not attempt to stop an accused infringer's activities in this manner should not be allowed to accrue enhanced damages based solely on the infringer's post-filing conduct." *Seagate Tech.*, 497 F.3d at 1374 (citations omitted).

The Court should remove this artificial restriction. First, it does not make sense to condition a trial judge's discretionary power to award more than actual damages upon the patent owner moving for a preliminary injunction—which motion might, of course, be futile or denied for a host of reasons unrelated to the merits. Second, although the lack of pre-suit notice of the alleged infringement is a proper consideration in an enhanced-damages determination, it should not be a rigid barrier. A patent owner may not give pre-suit notice if it acts immediately upon issuance of the patent, or the parties are longstanding competitors who have had previous disputes. It is contrary to core purposes of the Patent Act to direct the trial judge to ignore an infringer's reckless post-complaint activity.

Similarly, the trial judge should be permitted to consider whether the patent owner was reckless or overreaching post-complaint in asserting some of its patent claims. Often, a patent or family of patents will have dozens of claims, and the alleged infringer will have successfully challenged the validity of some asserted claims either in federal court litigation or in post-issuance Patent Office proceedings. Or, the alleged infringer may have successfully argued for a narrower claim scope than that asserted by the patent owner. The trial court rightfully shields the jury from these post-complaint successes, but that does not render them irrelevant to the willful infringement analysis.

In sum, trial judges should consider the parties' post-complaint and pre-complaint behavior, as the above patent policies do not end with the filing of a complaint.

F. Four Scenarios Illustrate Application Of These Guidelines.

Four scenarios illustrate application of the above guidelines to advance public policies of our patent system.

The increased-damages provision should not be applied to penalize companies for inventing and seeking patents on their inventions. It is common today for a company with hundreds or thousands of its own patented inventions to be sued for patent infringement and read in the complaint that its infringement was "willful" because the asserted patent was one of thousands or tens of thousands of "prior art" references cited during Patent Office examination of those patents of the defendant. Typically, no one who actually developed the technology accused of infringement

(as opposed to patent lawyers responsible for obtaining patents) ever read the asserted patent. Nevertheless, as an unwelcome "reward" for inventing and disclosing its inventions in patent applications—thereby serving a core public policy of our patent system—the defendant may subject itself to a charge of "willful" patent infringement. Under a correct interpretation of this statute, a trial judge should consider the pro-patent-filing public policy of our patent system when evaluating such a dubious basis for a claim of willfulness.

The increased-damages provision should not be used to unfairly penalize companies for licensing their patents to competitors. Licensing is one way patents can spread new technological advances beyond the customers served by the patent owner. But, licensing one's patent to a competitor risks the competitor later repudiating the license agreement and simultaneously filing a complaint for declaratory judgment of patent invalidity or non-infringement. Under current Federal Circuit rules, such a licensee-turned-infringer can argue that it is immune from an increased-damages award because there was no "infringement" of the patent *pre-suit* on account of the license. No matter how wanton and harmful the infringement, the patent owner may be penalized for having granted a license to its patent. Under a correct interpretation of the statute, however, a trial judge would be freed of this artificial restriction and permitted to consider the post-complaint behavior of the parties.

The increased-damages provision should not be used to reward patent owners for watching silently as the infringer increases its reliance on the (later-accused) technology as a foundation for later developments. Such

delay defeats the public policy favoring competitors inventing around issued patents. Similarly, patent owners who try to obfuscate the scope of their patent, refusing to take clear positions on what their patent covers and does not cover, defeat this policy as well. A trial judge should hesitate to reward such patent-owner behavior with an increased damages award.

The increased-damages provision should not be used to penalize those who initially infringed a patent innocently and then responded to an allegation of infringement with a good-faith effort to either obtain a license at a fair price or invent around the patent. For example, a company may have been unaware of a patent when it added a new feature to its product and even for years after it sold the product. If the company was later notified and sued, it would be entirely reasonable for the company to take time to attempt to negotiate a fair price for a license, or take some time to ascertain the scope and validity of the patent and modify its product accordingly to avoid infringement. A trial judge should consider any such period of good-faith licensing negotiations or study and re-design when assessing what portion, if any, of the infringing activity was willful.

In sum, this discretionary power should be exercised in light of the same public policies this Court has cited again and again when interpreting the Patent Act, freed of the restrictions the Federal Circuit has imposed without regard to those policies and without basis in the statute.

II. WILLFUL INFRINGEMENT IS NOT A JURY ISSUE.

The Federal Circuit's greatest erosion of the discretionary power Congress granted trial judges to award more than actual damages, is its rule that subjective willfulness of the infringement is a question for the jury. Under the statute and this Court's Seventh Amendment jurisprudence, willful infringement is not a jury question.

A. There Is No Statutory Right To A Jury Trial Of Willfulness.

Plainly, there is no statutory right to a jury trial on the issue of willfulness. Section 284 does not mention willfulness. *See Seagate Tech.*, 497 F.3d at 1377 (Gajarsa, J., concurring & Newman, J. joining). Willfulness is not an element of any liability theory or actual-damages theory under the Patent Act. Instead, it relates solely to exercise of the discretionary power of a trial judge to award more than the jury's actual damages award. For 180 years, the Patent Act expressly has given that power to trial judges not juries.

B. There Is No Seventh Amendment Right To A Jury Trial Of Willfulness.

There is no Seventh Amendment right to a jury trial on the issue of willfulness of patent infringement because—as with claim construction—the jury need not "shoulder this responsibility *as necessary to preserve the 'substance of the common-law right of trial by jury.'*" *Markman v. Westview Instruments, Inc.* 517 U.S. 370, 377 (1996) (citations omitted) (emphasis in original); *see Tull v.*

United States, 481 U.S. 412, 426 (1987) ("The assessment of civil penalties [for violation of the Clean Water Act] thus cannot be said to involve the 'substance of a common-law right to a trial by jury,' nor a 'fundamental element of a jury trial.'"). As in *Markman*, 517 U.S. at 377-88, this conclusion follows from both historical and functional considerations.

1. Historically, Juries Apparently Did Not Decide Willfulness In A Patent Suit.

Historically, it appears that willfulness was not presented to juries in patent suits before 1791. Professor Janice M. Mueller's review of selected English patent actions at law, from 1676 to 1834, suggested that willfulness was not an issue presented to English juries. "The early English cases discussed by the *Markman* Court do not suggest that the notion of willfulness even existed in 1791." Janice M. Mueller, *Commentary: Willful Patent Infringement and the Federal Circuit's Pending En Banc Decision in Knorr-Bremse v. Dana Corp.*, 3 J. Marshall Rev. Intell. Prop. L. 218, 224 (2004) ("*Mueller*"); *accord* John B. Pegram, *The Willful Patent Infringement Dilemma and the 7th Amendment*, 86 J. Pat. & Trademark Off. Soc'y 271, 280 (2004) ("*Pegram*") ("No [pre-1791] case was found in which a British jury addressed the issue of increased awards or punitive damages in patent infringement cases.").

Likewise, willfulness would not have been presented to American juries before adoption of the Seventh Amendment. The 1790 Patent Act did not permit juries to award punitive or increased damages in patent cases. *See* Act of Apr. 10, 1790, ch. 7, § 4, 1 Stat. 109, 111.

Under the later 1836 Act, which for the first time gave trial judges the discretion to award more than actual damages, it does not appear that juries were asked to decide willful infringement. "Willfulness simply was not part of the jury charge. Rather, the willfulness determination seemed to be inextricably part of the judge's decision to enhance or not enhance the amount of actual damages." *Mueller* at 226 (discussing certain cases cited in Professor Robinson's 1890 treatise).

This historical record distinguishes the issue of willfulness (and awarding more than actual damages) in patent actions from statutory damages in copyright actions. *Cf. Feltner v. Columbia Pictures Television, Inc.*, 523 U.S. 340 (1998) (finding a Seventh Amendment right to trial by jury of the amount of statutory damages in copyright actions). Unlike the Patent Act, the Copyright Act gives copyright owners the option to elect an award of statutory damages instead of actual damages and profits. *Id.* at 342. An issue in *Feltner* was, in effect, whether a copyright owner waived its right to a jury trial of damages when it elected this alternative damages theory. The Court ruled that it did not, in part because juries awarded, and sometimes were authorized to determine the amount of, statutory damages for copyright infringement both before and after the 1791 adoption of the Seventh Amendment. *Id.* at 349-54. Here, in contrast, the discretionary award of more than the actual damages assessed by a jury in a patent suit is a power unknown until 1836.

2. Functionally, Juries Are Ill-Suited To Decide Willfulness In A Patent Suit.

"Functional considerations," *Markman*, 517 U.S. at 388, likewise demonstrate that there is no Constitutional right to a jury trial of willfulness in a patent infringement suit. Trial judges are better positioned to determine willfulness in light of "the statutory policies that ought to be furthered by the allocation" between jury and judge. *Markman*, 517 U.S. at 384. *See Pegram* at 283-84.

First, juries necessarily are shielded from many of the circumstances relevant to willfulness. For example, they learn little or nothing about pre-trial motion practice, such as the strength of an infringer's unsuccessful claim-construction positions or its defenses based on those positions. Trial judges naturally are reluctant to allow defendants to present to the jury why the judge's pre-trial rulings were wrong. Juries do not learn of the infringer's success in invalidating and/or narrowing multiple claims of the patent pre-trial. An infringer might, for example, successfully invalidate a dozen broad claims pre-trial, or in post-issuance Patent Office proceedings, but the jury sees only the surviving asserted claims. Similarly, juries typically do not learn of an infringer's unsuccessful but reasonable settlement efforts to obtain a license to the patent, or whether the infringer faced inconsistent claim-construction positions or infringement allegations from the patent owner. Nor do they learn of any retroactive changes in the governing substantive law, favoring one party or the other, after the infringement began.

Second, a trial judge is better able to assess the behavior of the infringer and patent owner, relative to the

public interests served by our patent system. Two typical examples illustrate this functional advantage of judges over juries in assessing willfulness.

As noted above, it is common today for a charge of willfulness to be based on the mere citation of the asserted patent as prior art during Patent Office examination of one of the defendant's own patents. A trial judge is much better suited than a jury to appreciate the practical realities, and public policies, of our patent system when evaluating such a dubious basis for a claim of willfulness.

As a second example, a core purpose of our patent system is to encourage workers in the field to read issued patents and hopefully use them as springboards to further advances. But, giving subjective willfulness to juries undermines this purpose by penalizing skilled artisans (and their companies) for looking at others' patents. If one of a company's engineers read the asserted patent, that will be argued to the jury as evidence of willful infringement, even if the alleged infringer attempted to license the patent at a fair value, or invented around most of the patent claims. This is one oft-cited reason why many companies prohibit their employees from looking at patents. *See, e.g.*, Mark A. Lemley, *Ignoring Patents*, 2008 Mich. St. L. Rev. 19, 21 ("Companies and lawyers tell engineers not to read patents in starting their research, lest their knowledge of the patent disadvantage the company by making it a willful infringer.") A trial judge, again, is better able to appreciate this core public policy when evaluating such an assertion of willfulness. A trial judge will better appreciate that there are legitimate reasons to look at a competitor's patents, and even to copy ideas described but not claimed in a patent. *Bonito*

Boats, Inc. v. Thunder Craft Boats, Inc., 489 U.S. 141, 165 (1989) (federal patent laws grant a federal right to copy and use "potentially patentable ideas which are fully exposed to the public.") These and other practical and policy considerations make a trial judge more likely to determine "willfulness" in a manner consistent with the Patent Act's policies.

Third, because willfulness properly can be adjudged only after considering all of the relevant circumstances, some of which play out during the litigation itself, it is best considered post-verdict, as part of any enhanced-damages motion and any attorney fees motion. Only then can the trial judge fully assess and balance the behavior of each party pre- and post-complaint as well as the adequacy of the actual damages award, in the context of the patent system's core public policies. *See Swofford v. B&W, Inc.*, 336 F.2d 406, 413 (5th Cir. 1964) ("questions of willfulness, deliberateness, and increased damages should properly await final judgment.").

Fourth, allowing juries to hear evidence of alleged willfulness necessarily risks skewing the jury's deliberations on liability and damages. For example, jurors might trade a finding of "no willfulness" for a doubling of the damages awarded—without the trial judge or appellate court knowing.

In sum, Congress entrusted this power to trial judges—not juries—for good reasons.

C. The Federal Circuit Has Not Conducted The Required Seventh Amendment Analysis.

For 26 years the Federal Circuit has maintained that there is a right to a jury trial of willfulness—without conducting the historical and functional analyses required by this Court's Seventh Amendment jurisprudence.

Prior to creation of the Federal Circuit, circuit courts were divided on whether there is a Seventh Amendment right to a jury trial of the issue of willfulness in patent suits. *Compare Swofford*, 336 F.2d at 411-14 (no right) *with Hammerquist v. Clarke's Sheet Metal, Inc.*, 658 F.2d 1319, 1326-27 (9th Cir. 1981) (willfulness is a question of mental state for a jury); *see* 7 Donald S. Chisum, *Chisum on Patents* § 20.03[4][b][vii] (2014) (citing conflicting decisions).

In 1989—with scant analysis—the Federal Circuit held that parties have a Seventh Amendment right to trial by jury of the issue of willfulness of infringement of a patent. *Richardson*, 868 F.2d at 1250 ("Absent sufficient basis for directing the verdict, Richardson has the right of jury determination of this factual question. Willfulness of behavior is a classical jury question of intent."). Earlier, in *Shiley, Inc. v. Bentley Labs., Inc.*, 794 F.2d 1561, 1568 (Fed. Cir. 1986), a trial court had labelled as "advisory" the jury's finding on willfulness "to enable it to exercise the court's statutory discretion to award increased damages." The Federal Circuit faulted that, and held that, "if the jury finding is that willful infringement did not occur and that finding is not overturned on a motion for JNOV, no basis for assessing increased damages for willful infringement exists." *Id.*

The Federal Circuit has strictly enforced this restriction on a trial judge's discretionary power to award more than actual damages. For example, it has prohibited trial judges from reweighing evidence that underlay a jury's finding on willfulness. *Jurgens v. CBK, Ltd.*, 80 F.3d 1566, 1572 (Fed. Cir. 1996).

But, the Federal Circuit has maintained this position without conducting the analysis mandated by this Court's Seventh-Amendment precedents, including *Markman* and *Tull*. Judge O'Malley made this very point in her concurring opinion in this case (*Halo*): "The mere presence of factual components in a discretionary inquiry does not remove that inquiry from the court to whom congress reposed it. *See Markman v. Westview Instruments, Inc.*, 52 F.3d 967, 992 (Fed. Cir. 1995), *aff'd*, 517 U.S. 370 (1996) ('Even within the realm of factual questions, whether a particular question must always go to a jury depends 'on whether the jury must shoulder this responsibility as necessary to preserve the substance of common law right of trial by jury.' (quoting *Tull*, 481 U.S. at 417))." *Halo Elecs., Inc. v. Pulse Elecs., Inc.*, 769 F.3d 1371, 1386 (Fed. Cir. 2014) (O'Malley, J., concurring & Hughes, J., joining).

CONCLUSION

The power Congress granted trial judges to award more than the patent owner's actual damages is not one to be used often. Nonetheless, used properly it is an important tool for balancing the competing public interests at the heart of our patent system. When properly interpreted to allow trial judges to consider the relevant behavior and posture of both the infringer and the patent owner both post-complaint and pre-complaint, this discretionary

power can further motivate inventors to seek patents, others to license or invent around those patents, and competitors to challenge patents improperly taking from the public domain. Conversely, as misinterpreted and misapplied by the Federal Circuit, this power to increase a patent damages award can penalize companies for seeking patents and patent owners for licensing their patents, and reward patent owners for watching silently as an infringer increasingly builds atop a later-accused feature. To restore this grant to its proper, positive role, the Court should overturn the Federal Circuit's restrictions on this discretionary power, return the issue of subjective willfulness to trial judges, and guide trial judges in their application of this discretionary power.

Respectfully submitted,

JOHN D. VANDENBERG
Counsel of Record
SALUMEH R. LOESCH
KLARQUIST SPARKMAN, LLP
121 S.W. Salmon Street, Suite 1600
Portland, Oregon 97204
(503) 595-5300
john.vandenberg@klarquist.com

Counsel for Amici Curiae

December 14, 2015

Supreme Court, U.S.
FILED
DEC 16 2015
OFFICE OF THE CLERK

Nos. 14-1513 and 14-1520

IN THE

Supreme Court of the United States

HALO ELECTRONICS, INC., ET AL.,
Petitioners,

v.

PULSE ELECTRONICS, INC., ET AL.,
Respondents.

ON WRITS OF CERTIORARI TO THE
UNITED STATES COURT OF APPEALS
FOR THE FEDERAL CIRCUIT

BRIEF OF PROFESSOR ADAM MOSSOFF AS *AMICUS CURIAE* IN SUPPORT OF NEITHER PARTY

Matthew J. Dowd
Counsel of Record
Sushila Chanana
Eric Osborne
Andrews Kurth LLP
1350 I Street, NW
Washington, D.C. 20005
(202) 662-2700
MatthewDowd@andrewskurth.com
Counsel for *Amicus Curiae*

December 16, 2015

QUESTION PRESENTED

1. Whether the Federal Circuit erred by applying a rigid, two-part test for enhancing patent infringement damages under 35 U.S.C. § 284.

TABLE OF CONTENTS

Page

TABLE OF CONTENTS i

TABLE OF AUTHORITIES ii

INTEREST OF *AMICI CURIAE* 1

SUMMARY OF THE ARGUMENT 1

ARGUMENT 4

I. PATENT LICENSING ENTITIES ARE NOT NEW, AND THEY HAVE AN IMPORTANT ROLE IN THE DEVELOPMENT OF INNOVATION 4

A. The Patent Licensing Business Model in the Nineteenth Century 7

B. Secondary Markets in the Nineteenth Century 12

C. The Economic Function of Intermediaries in Patent Licensing and Secondary Markets 18

II. THE PATENT LITIGATION RATE TODAY IS WITHIN HISTORICAL NORMS AND THUS DOES NOT REQUIRE SPECIAL RULES FOR AWARDING ENHANCED DAMAGES 23

CONCLUSION 29

TABLE OF AUTHORITIES

Cases **Page**

Davoll v. Brown,
7 F. Cas. 197 (C.C.D. Mass. 1845) 8

Other Sources

35 U.S.C. § 284 ..... *passim*

A Market for Ideas, The Economist,
Oct. 22, 2005, at 3 5

Adam Mossoff, *Patent Licensing and Secondary Markets in the Nineteenth Century*,
22 George Mason Law Review 959 (2015) .. 8, 9-10

Adam Mossoff, *Repetition of Junk Science and Epithets Does Not Make Them True*,
IPWatchdog (Nov. 19, 2015), *at*
http://www.ipwatchdog.com/2015/11/19/repetition-of-make-them-true/id=63302/ 4

Adam Mossoff, *The SHIELD Act: When Bad Economic Studies Make Bad Laws*, CPIP Blog (Mar. 15, 2013), *at*
http://cpip.gmu.edu/2013/03/15/the-shield-act-when-bad-economic-studies-make-bad-laws/ 4

Adam Mossoff, *The Rise and Fall of the First American Patent Thicket: The Sewing Machine War of the 1850s*,
53 Arizona Law Review 165 (2011) 10, 13, 27

Adam Mossoff, *Who Cares What Thomas Jefferson Thought About Patents? Reevaluating the Patent "Privilege" in Historical Context*, 92 Cornell Law Review 953 (2007) 7

Adam Mossoff, *Patents as Constitutional Private Property: The Historical Protection of Patents under the Takings Clause*, 87 Boston University Law Review 689 (2007). 8

Adam Smith, *An Inquiry into the Nature and Causes of the Wealth of Nations* (Edwin Cannan ed., University of Chicago Press 1976) (1776) 28

Anne Kelley, *Practicing in the Patent Marketplace*, 78 University of Chicago Law Review 115 (2011) 5

Audrey Quinn, *The Diaper Wars*, Life of the Law (Feb. 10, 2015), *at* http://www.lifeofthelaw.org/2015/02/the-diaper-wars/. 27-28

B. Zorina Khan, *Trolls and Other Patent Inventions: Economic History and the Patent Controversies in the Twenty-First Century*, 21 George Mason Law Review 825 (2014) ..... *passim*

B. Zorina Khan, *Facts and Fables: A Long-Run Perspective on the Patent System*, Cato Unbound (Sept. 10, 2014), *at* http://www.cato-unbound.org/2014/09/10/b-zorina-khan/facts-fables-long-run-perspective-patent-system. 24

B. Zorina Khan, *The Democratization of Invention: Patents and Copyrights in American Economic Development, 1790-1920* (2005) 6, 7, 17, 25

Brian T. Yeh, Congressional Research Service, R42668, *An Overview of the "Patent Trolls" Debate* (Apr. 16, 2013) 19, 20

Christopher Beauchamp, *The First Patent Litigation Explosion*, 125 Yale L.J. ___ (2016) (forthcoming), *at* http://ssrn.com/abstract=2699964 ..... *passim*

Christopher Beauchamp, *Invented by Law: Alexander Graham Bell and the Patent That Changed America* (2015) 7

Colleen Chien & Edward Reines, *Why Technology Customers Are Being Sued En Masse for Patent Infringement and What Can Be Done*, 49 Wake Forest L. Rev. 235 (2014) 5

Demand Letters and Consumer Protection: Examining Deceptive Practices and Patent Assertion Entities: Hearing Before the Subcomm. on Consumer Prot., Prod. Safety, and Ins. and S. Comm. on Commerce, Sci., and Transp., 113th Cong. 34-62 (2013) (statement of Adam Mossoff, Professor of Law, George Mason School of Law) 9

Dongbiao Shen, *Misjoinder or Mishap? The Consequences of the AIA Joinder Provision*, 29 Berkeley Technology Law Journal 545 (2014) 25

Earl W. Hayter, *The Western Farmers and the Drivewell Patent Controversy*, 16 Agricultural History 16 (1942) 20

Federal Trade Commission, *FTC Settlement Bars Patent Assertion Entity From Using Deceptive Tactics*, Nov. 6, 2014, *at* https://www.ftc.gov/news-events/press-releases/2014/11/ftc-settlement-bars-patent-assertion-entity-using-deceptive 20

James Bessen & Michael J. Meurer, *A Third of the Economy is at Stake—and Patent Trolls are to Blame*, Washington Post, Nov. 18, 2015, *at* https://www.washingtonpost.com/news/in-theory/wp/2015/11/18/patent-trolls-are-costing-us-billions-they-must-be-stopped/ 23-24

James Bessen & Michael J. Meurer, *The Patent Litigation Explosion*, 45 Loyola University of Chicago Law Journal 401 (2014) 23

Joe Nocera, *The Patent Troll Smokescreen*, N.Y. Times, Oct. 23, 2015, *at* http://www.nytimes.com/2015/10/24/opinion/the-patent-troll-smokescreen.html 6

Kenneth Sokoloff & B. Zorina Khan, *Institutions and Technological Innovation During the Early Economic Growth: Evidence from the Great Inventors of the United States, 1790-1930*, NBER Working Paper No. 10966 (Dec. 2004), *at* http://www.nber.org/papers/w10966 12

Letter by Forty Economists and Law Professors to House and Senate Judiciary Committees (Mar. 10, 2015), *at* http://cpip.gmu.edu/wp-content/uploads/2015/03/Economists-Law-Profs-Letter-re-Patent-Reform.pdf 21

Michael Risch, *Patent Troll Myths*, 42 Seton Hall Law Review 457 (2012) 19

Naomi R. Lamoreaux & Kenneth L. Sokoloff, *Inventive Activity and the Market for Technology in the United States, 1840-1920*, NBER Working Paper No. 7107 (May 1999), *at* http://www.nber.org/papers/w7107 8

Naomi R. Lamoreaux, *et al.*, *Patent Alchemy: The Market for Technology in US History*, 87 Business History Review 3 (Spring 2013) 11

Richard Posner, *Patent Trolls*, The Becker-Posner Blog, July 21, 2013, *at* http://www.becker-posner-blog.com/2013/07/patent-trollsposner.html 6

Robert A. Brown & James P. Clements, *A Patent-Troll Bill with Bad College Grades*, Wall Street Journal, Apr. 14, 2015, *at* http://www.wsj.com/articles/a-patent-troll-bill-with-bad-college-grades-1429051694 21-22

Ron D. Katznelson, *A Century of Patent Litigation in Perspective* (Nov. 17, 2014), *at* http://papers.ssrn.com/abstract=2503140 28

Sannu K. Shrestha, *Note, Trolls or Market-Makers? An Empirical Analysis of Nonpracticing Entities*, 110 Columbia Law Review 114 (2010) 18-19

Scientific American, Aug. 28, 1869, at 143 14

Scientific American, Aug. 12, 1854, at 383 15

Steve Haber & Seth J. Werfel, *Why Do Inventors Sell to Patent Trolls? Experimental Evidence for the Asymmetry Hypothesis* (Nov. 3, 2015), *at* http://ssrn.com/abstract=2552734 20

Steven Lubar, *The Transformation of Antebellum Patent Law*, 32 Technology & Culture 932 (1991) 12

U.S. Government Accounting Office, *Intellectual Property: Assessing Factors That Affect Patent Infringement Litigation Could Help Improve Patent Quality* (Aug. 2013) 11, 25

U.S. Patent No. 3,633 10

U.S. Patent No. 4,750 10

U.S. Patent No. 6,439 13

U.S. Patent No. 45,466 18

U.S. Patent No. 129,843 17

U.S. Patent No. 208,137 18

University Inventions that Changed the World, **at**
http://www.ipadvocate.org/pdfs/Uni%20Inventions%20Changed%20the%20World.pdf 22

INTEREST OF *AMICI CURIAE*[1]

Amicus curiae is Adam Mossoff, Professor of Law at George Mason University School of Law. Professor Mossoff teaches and writes on patent law and policy and is thus concerned with the integrity of the legal system that secures innovation to its creators and to the companies that commercialize it in the marketplace. He has written extensively on the historical understanding of the patent system in the United States of America, and on the invention and commercialization practices of patent owners throughout the eighteenth and nineteenth centuries. Given that some parties and *amici* are making historical claims about whether patent licensing entities should receive the benefit of the enhanced damages provided for in § 284 of the Patent Act, Professor Mossoff respectfully submits this brief to clarify the historical record on patent licensing and litigation.

SUMMARY OF THE ARGUMENT

In the present case, the issue before the Court is the proper interpretation of 35 U.S.C. § 284. It is a question of statutory construction, but in recent years, some commentators have argued that enhanced damages should not be available for

---

[1] Petitioner and Respondents in No. 14-1513 filed letters of blanket consent to *amici* on November 10 and November 19, 2015, respectively. Petitioner in No. 14-1520 filed a letter of blanket consent to amici on November 11, 2015. Respondents in No. 14-1520 consented via letter on December 15, 2015. *Amicus* and counsel represent that no party to this case nor their counsel authored this brief in whole or in part, and that no person other than *amicus* paid for or made a monetary contribution toward the preparation and submission of this brief.

inventors and companies that license their patented innovations, as opposed to manufacturing them. These arguments have appeared in this case as well. These assertions are wrong and should be rejected.

During the last decade, the patent policy debates have been dominated by the concept of "patent trolls." This pejorative term implies that there are individuals and companies who "hold up" innovation by abusing the patent system via litigation and licensing. Although this term has gripped the courts, regulatory agencies, and Congress, it is important to recognize that it lacks a settled definition. Going far beyond the few bad actors repeatedly identified in the policy debates, commentators and policy advocates have attacked as "trolls" anyone who licenses their patented innovation—individual inventors, universities, startups, and even manufacturing companies that license in addition to manufacturing their patented innovation. In sum, though compelling as a rhetorical device, this term demonizes and obfuscates, as opposed to advancing a rational, substantive analysis of important issues such as patent licensing, infringement, and enforcement.

One profoundly mistaken claim that accompanies the "patent troll" epithet is that the patent licensing business model, as well as the enforcement of patents by the individuals and companies who use this business model, is a new phenomenon in today's innovation economy. This historical claim, which is sometimes explicit but often times merely implicit, drives an equally mistaken assumption that this allegedly novel commercial behavior harms innovation. For instance, Petitioners in consolidated Case No. 14-1520 assert that a "patentee's business

model" in licensing its property or asserting it against infringers does not "incentivize innovation," and thus these patent owners should be denied enhanced damages under § 284. Pet'rs' Br. at 43.

In a case presenting a straightforward question of statutory interpretation, these mistaken historical and policy claims should not infect the Court's decision-making process. Historically, individuals and companies licensing and enforcing patent rights have long served an important role in ensuring that the patent system achieves its objective of promoting the progress of the useful arts. These "patent licensing entities" serve the vital function of making capital available to inventors and businesses for ongoing research and development, as well as achieving efficiencies in the marketplace via a division of labor between inventors and commercial intermediaries. The parties and other *amici* fully address the relevant legal and factual issues concerning the interpretation and application of § 284, and thus *Amicus* here offers two further insights for ensuring that the Court construes the Patent Act in accord with longstanding historical understandings and practices in promoting innovation.

First, the argument that patent licensing entities should not receive enhanced damages is based on a mistaken view that they are of only recent vintage and are causing harm to manufacturing companies producing innovation. To the contrary, historical research has confirmed that patent licensing has played a significant and important role in the patent system since the early nineteenth century. The patent licensing business model has long been a part

of the successful functioning of the patent system in driving America's innovation economy.

Second, the premise that patent litigation rates are at unprecedentedly high levels today is false. That premise should therefore not be the basis for a denial of awards of enhanced damages under § 284 to patent licensing entities. As shown in research by award-winning economist Zorina Khan, today's patent litigation rates are within historical norms and, in fact, are lower than patent litigation rates seen for decades in the Antebellum Era.

ARGUMENT

I. Patent Licensing Entities Are Not New, and They Serve an Important Role in the Development of Innovation

It is without doubt that the patent licensing business model and patent litigation have become a flashpoint of controversy today. The companies or individuals who engage in patent licensing and litigation today are widely referred to as "patent assertion entities" (PAE), "non-practicing entities" (NPE) or by the more fashionable and inflammatory term, "patent trolls."[2]

---

[2] This term lacks any objective definition, and it should not be used by lawyers, commentators, or scholars who care about precision and accuracy in discussions of patent law and policy. *See, e.g.*, Adam Mossoff, *Repetition of Junk Science and Epithets Does Not Make Them True*, IPWatchdog (Nov. 19, 2015), *at* http://www.ipwatchdog.com/2015/11/19/repetition-of-make-them-true/id=63302/; Adam Mossoff, *The SHIELD Act: When Bad Economic Studies Make Bad Laws*, CPIP Blog (March 15, 2013), *at* http://cpip.gmu.edu/2013/03/15/the-shield-act-when-bad-economic-studies-make-bad-laws/.

For reasons addressed in this section, these companies and individuals should be identified by their actual business model: patent licensing. Unless one works at a law firm, litigation (including threats of litigation) is not a business model; rather, the business model is licensing, in the course of which it can be necessary to threaten to sue or sue recalcitrant licensees. Since the early nineteenth century, untold numbers of inventors and companies have licensed or sold their patents, rather than manufactured their inventions. This has achieved tremendous efficiencies through the division of labor and has been essential to America's flourishing innovation economy.

Unfortunately, patent licensing entities are more the subject of misunderstanding and myth than of fact—an equally unfortunate feature of most modern policy debates in the halls of Congress. One such myth is that the patent licensing business model is a new phenomenon and should therefore be viewed with suspicion given its allegedly unknown role in the innovation economy. Commentators repeatedly express such mistaken beliefs in law journal articles, which are supposed to be scrupulously fact-checked by editors. *See, e.g.*, Anne Kelley, *Practicing in the Patent Marketplace*, 78 Univ. Chicago L. Rev. 115, 117 (2011) ("The patent marketplace is a relatively new secondary market, which has grown quickly."); Colleen Chien & Edward Reines, *Why Technology Customers Are Being Sued En Masse for Patent Infringement and What Can Be Done*, 49 Wake Forest L. Rev. 235, 236 (2014); *A Market for Ideas*, The Economist, Oct. 22, 2005, at 3, 3 ("A new breed of companies has appeared on the periphery of today's tech firms, acting as intellectual-property intermediaries and creating a market for ideas.").

Even a prominent judge such as the Honorable Richard A. Posner simply assumes that patent licensing is new when he proposes a manufacturing requirement for all patents as a solution to the allegedly new problem of "patent trolls." *See, e.g.*, Richard Posner, *Patent Trolls*, The Becker-Posner Blog, July 21, 2013, *at* http://www.becker-posner-blog.com/2013/07/patent-trollsposner.html. As these mistaken assumptions have captured the public's view of the patent system, commentators and certain companies have lobbied for changes to the patent laws to counteract this so-called new phenomenon. *See, e.g.*, Joe Nocera, *The Patent Troll Smokescreen*, N.Y. Times, Oct. 23, 2015, *at* http://www.nytimes.com/2015/10/24/opinion/the-patent-troll-smokescreen.html.

This conventional wisdom, like much conventional wisdom, is profoundly mistaken. As award-winning economist Zorina Khan has explained in thoroughgoing research into primary historical sources, licensing has long been an essential feature of the uniquely American patent system, which has long secured property rights in innovation to both inventors and the marketplace actors who commercialized this innovation. *See, e.g.*, B. Zorina Khan, *Trolls and Other Patent Inventions: Economic History and the Patent Controversies in the Twenty-First Century*, 21 Geo Mason L. Rev. 825 (2014); B. Zorina Khan, *The Democratization of Invention: Patents and Copyrights in American Economic Development, 1790-1920*, at 10 (2005) ("Extensive markets in patent rights [in the nineteenth century] allowed inventors to extract returns from their activities through licensing and assigning or selling their rights."). Professor Khan and other economists have recently expanded upon

and extended their historical research to more directly address today's hot-button policy debate concerning patent licensing and secondary markets. Legal historians, such as Christopher Beauchamp, have delved into difficult-to-access court records and other primary sources concerning nineteenth-century patented innovation to reveal the true extent of licensing activities and litigation in the nineteenth century. *See* Christopher Beauchamp, *The First Patent Litigation Explosion*, 125 Yale L.J. __ (2016) (forthcoming), *at* http://ssrn.com/abstract=2699964, at 4–5; Christopher Beauchamp, *Invented by Law: Alexander Graham Bell and the Patent That Changed America* (2015).

An accurate historical perspective is necessary to understand the current debate about patent licensing, litigation, and the role of enhanced damages with respect to patent licensing entities. Thus, *Amicus* will provide a brief overview of patent licensing and the marketplace for patented innovation in the nineteenth century.

A. The Patent Licensing Business Model in the Nineteenth Century

During the legislative debates that led up to the enactment of the Patent Act of 1790, the Senate considered a manufacturing requirement for patentees, but the House explicitly rejected this proposal as an infringement of a patentee's rights. *See* Khan, *The Democratization of Invention*, *supra*, at 41. With passage of the Patent Act of 1790, patents were defined in American law as property rights, as early Congresses and courts ensured that patents had all the attributes of property rights that are legally secured to their owners. *See* Adam Mossoff, *Who Cares What Thomas Jefferson Thought*

About Patents? Reevaluating the Patent "Privilege" in Historical Context, 92 Cornell L. Rev. 953, 992–97 (2007); Adam Mossoff, *Patents as Constitutional Private Property: The Historical Protection of Patents under the Takings Clause*, 87 B.U. L. Rev. 689, 702–03 (2007). Reflecting the dominant legal approach to securing American patent rights, Circuit Justice Levi Woodbury explained in an 1845 patent case: "[W]e protect intellectual property, the labors of the mind, productions and interests as much a man's own, and as much the fruit of his honest industry, as the wheat he cultivates, or the flocks he rears." *Davoll v. Brown*, 7 F. Cas. 197, 199 (C.C.D. Mass. 1845).

As owners of property rights, patent owners were secured in their rights of acquisition, use, and disposal, which facilitated the licensing and sale of these property rights. This created the world's first patent licensing industry, beginning in early nineteenth-century America. Naomi R. Lamoreaux & Kenneth L. Sokoloff, *Inventive Activity and the Market for Technology in the United States, 1840-1920*, NBER Working Paper No. 7107, at 10–13 (May 1999), *at* http://www.nber.org/papers/w7107. In brief, the early American patent system was as much a part of American exceptionalism as every other aspect of American politics and law in the Federalist Period and in the Antebellum Era.

With that genesis, it should come as no surprise—yet it is frequently forgotten—that the patent licensing business model has deep historical roots in the American innovation economy. *See* Adam Mossoff, *Patent Licensing and Secondary Markets in the Nineteenth Century*, 22 Geo. Mason L. Rev. 959, 961–66 (2015). A complete survey of all

individuals and firms who used the patent licensing business model to commercialize patented innovation is beyond the scope of this *amicus* brief. Recent scholarship has brought renewed attention to the important role patent licensing played in the nineteenth century. *See, e.g.*, *id.*; Khan, *Trolls and Other Patent Inventions*, *supra*, at 830–34; Lamoreaux & Sokoloff, *Inventive Activity*, *supra*, at 3–5.

A few illustrative examples demonstrate both the importance of patent licensing in the nineteenth century and the extent to which the current patent policy debates have ignored the potential lessons from patent licensing in the nineteenth century. Three prominent examples are Charles Goodyear, Elias Howe, Jr., and Thomas Edison. *See Demand Letters and Consumer Protection: Examining Deceptive Practices and Patent Assertion Entities: Hearing Before the Subcomm. on Consumer Prot., Prod. Safety, and Ins. and S. Comm. on Commerce, Sci., and Transp.*, 113th Cong. 34-62 (2013) (statement of Adam Mossoff, Professor of Law, George Mason School of Law). The former two inventors are significant because they prove that, long before Edison began his massive inventive labors in the late nineteenth century, prominent inventors and patent owners utilized the patent licensing business model in the early nineteenth century.

The name Goodyear is widely known, particularly to NASCAR fans, but what is not known is that he did not create the Goodyear Tire & Rubber Company. The company was formed in 1898, almost four decades after Goodyear's death in 1860. *See* Mossoff, *Patent Licensing and Secondary Markets*,

supra, at 963. Goodyear did invent vulcanized rubber in 1839, and he received a patent for it in 1844. *See* U.S. Patent No. 3,633, issued June 15, 1844. During his lifetime, Goodyear embraced the patent licensing business model, and he and his licensees also engaged in extensive litigation against infringers of his innovative technology, filing hundreds of lawsuits. *See* Beauchamp, *The First Patent Litigation Explosion*, *supra*, at 16.

Perhaps a lesser known figure, Elias Howe played a pivotal role in the patent licensing marketplace in the nineteenth century. He invented the lockstitch in 1843, receiving a patent three years later. *See* U.S. Patent No. 4,750, issued Sept. 10, 1846. Similar to many inventors today, Howe entered into royalty agreements after suing commercial firms and individuals upon discovering that they were infringing his patent rights. In fact, Howe employed patent litigation practices that are erroneously called novel today. For instance, Howe was destitute when his licensing demands were refused in the early 1850s, and so he found a businessperson to invest in his patent infringement lawsuits and received funding from selling a one-half interest in his patent to George W. Bliss. Ultimately, after being a principal legal pugilist in the 1850s patent war known at the time as the "Sewing Machine War," Howe joined the Sewing Machine Combination of 1856, the first patent pool in American history, through which he recouped millions of dollars in licensing fees from companies and individuals who used his patented technology. *See* Adam Mossoff, *The Rise and Fall of the First American Patent Thicket: The Sewing Machine War of the 1850s*, 53 Ariz. L. Rev. 165, 184–85 (2011).

Finally, everyone knows of Thomas Edison, the quintessential American inventor, the Wizard of Menlo Park. He created a panoply of inventions, from the first practical incandescent light bulb to carbon microphones to movie cameras to a system for electric power distribution. Less well known about Edison is how he used patent sales or licenses to help him finance his inventive endeavors. Early in his career, for instance, he sold at least twenty of his early patented inventions to third-parties in order to fund his full-time research and development efforts. *See* Naomi R. Lamoreaux, *et al.*, *Patent Alchemy: The Market for Technology in US History*, 87 Business History Review 3, 6 (Spring 2013). Edison continued to sell or license his patent rights, including his patents to the innovative incandescent light bulbs, which he conveyed to the General Electric Company. Through those transactions, Edison benefitted from an advanced commercial system that permitted and encouraged an economic market in intellectual property rights, enabling him to continue his efforts as one of the world's greatest inventors. Because Edison was able to focus on his inventive efforts, the U.S. economy and society as a whole benefitted.

In short, "[h]istory is filled with examples of successful inventors who did not develop products based on the technologies they patented." U.S. Government Accounting Office, *Intellectual Property: Assessing Factors That Affect Patent Infringement Litigation Could Help Improve Patent Quality* 1 (Aug. 2013) ("GAO Report"), *at* http://www.gao.gov/assets/660/657103.pdf. Some nineteenth-century inventors did try to profit directly from their patents via manufacturing, but "[t]his became increasingly difficult with the rise of larger business firms and the increased capital costs

of going into business." Steven Lubar, *The Transformation of Antebellum Patent Law*, 32 Technology & Culture 932, 948 (1991). Thus, "[d]istributing some of the rights once held by inventors to purchasers of patents made the exercise of those rights more accessible to businesses and thus allowed them more control over their property." *Id.* Ultimately, as economic historians have found, two-thirds of the 160 "great inventors" of the Industrial Revolution used licensing to profit from their patented innovation. *See* Kenneth Sokoloff & B. Zorina Khan, *Institutions and Technological Innovation During the Early Economic Growth: Evidence from the Great Inventors of the United States, 1790-1930*, NBER Working Paper No. 10966, at 32, 36 (Dec. 2004), *at* http://www.nber.org/papers/w10966.

B. Secondary Markets in the Nineteenth Century

Although Edison, Goodyear, Howe, and others sold or licensed their patents, commenters assert that until recently inventors largely did not profit by the sale or licensing of their patents to market actors. This type of business activity in which a commercial asset like a patent is bought or sold is identified by economists as a "secondary market," and the oft-repeated claim today by many law professors and others is that large-scale selling and licensing of patents in a secondary market is a recent phenomenon. This is as profoundly mistaken as the related assertion that the patent licensing business model is novel. In fact, secondary markets for patents were extraordinarily important for facilitating the commercialization of inventions in the marketplace of the nineteenth century.

In the Sewing Machine War in the 1850s, for instance, the various patents obtained by different inventors on different components of the sewing machine were purchased or exchanged between a variety of individuals and firms. *See generally* Mossoff, *The Sewing Machine War*, *supra*. In fact, one of the most significant inventive contributions to the development of the sewing machine was made by John Bachelder (U.S. Patent No. 6,439, issued May 8, 1849), but Bachelder neither manufactured sewing machines nor licensed his patent. He sold his patent to Isaac Singer, who ultimately assigned it to the pool of patents owned and licensed by the Sewing Machine Combination, the patent pool formed in 1856 by Singer and other patent owners to resolve the hard-fought Sewing Machine War.

Even before the Sewing Machine War in the early 1850s, there was a vibrant secondary market in patents, and just like today, these secondary owners enforced their patents against infringers of their property rights. For instance, Allen B. Wilson invented a double-pointed shuttle for sewing machines in 1848. The following year, though, A.P. Kline and Edward Lee, the secondary owners of another sewing machine patent, threatened Wilson with a lawsuit for infringing their patent. Lacking the funds to defend himself, Wilson sold his patent rights to Kline and Lee to settle the dispute.

The outright sale of patents or the more limited licensing of patent rights occurred throughout many industries in nineteenth-century America. This is confirmed by the many, many classified ads in issues of *Scientific American* at that time, offering for sale or seeking to purchase patents or patent rights. In an 1869 issue of *Scientific American*, for example,

among advertisements touting the value to purchasers of "Woodbury's Patent Planing and Matching and Moulding Machines" and advertisements seeking "agents" "[t]o sell H.V Van Etten's Patent Device for Catching and Holding Domestic Animals," one finds advertisements offering the sale of patents and patent rights:

A PATENT ON A FARM GATE TO SELL or Exchange for a No. 1 8-horse power Portable Steam Engine. Address C. H. EMMERT, West Dresden, Yates Co., N. Y.

BENT, GOODNOW & CO., Boston, Mass., Agents for the sale of Patents. FOR SALE—A variety of very valuable "Rights." Send stamp for THE PATENT STAR, Containing descriptions of each.

PATENT RIGHTS SOLD ON COMMISSION, and Valuable Inventions introduced by the most experienced Patent Salesmen in the Union. Can refer to over one hundred inventors for whom we have acted. M. M. ROBERTS & CO., Consulting Engineers, 13 Wall st., New York.

Scientific American, Aug. 28, 1869, at 143. To take but one more small set of examples: an 1854 issue of *Scientific American* contained advertisements for the sale of the rights in various patents covering hay elevator technology, boat spike machining technology, and a stone drilling machine:

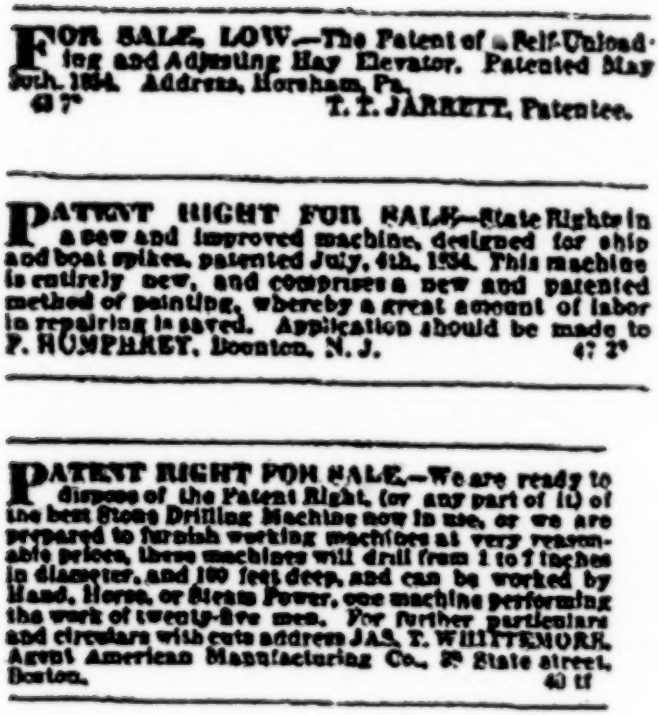

FOR SALE, LOW.—The Patent of a Self-Unloading and Adjusting Hay Elevator. Patented May 30th, 1854. Address, Horsham, Pa.
43 7* T. T. JARRETT, Patentee.

PATENT RIGHT FOR SALE.—State Rights in a new and improved machine, designed for ship and boat spikes, patented July, 4th, 1854. This machine is entirely new, and comprises a new and patented method of pointing, whereby a great amount of labor in repairing is saved. Application should be made to P. HUMPHREY, Boonton, N. J. 47 3*

PATENT RIGHT FOR SALE.—We are ready to dispose of the Patent Right, (or any part of it) of the best Stone Drilling Machine now in use, or we are prepared to furnish working machines at very reasonable prices. These machines will drill from 1 to 7 inches in diameter, and 100 feet deep, and can be worked by Hand, Horse, or Steam Power, one machine performing the work of twenty-five men. For further particulars and circulars with cuts address JAS. T. WILLITEMORE, Agent American Manufacturing Co., 3? State street, Boston. 40 tf

Scientific American, at 383 (Aug. 12, 1854)

These advertisement sections in nineteenth-century issues of *Scientific American* and other periodicals reflect incontrovertible evidence of both secondary markets in patents and the patent licensing business model.

Indeed, there were robust secondary markets in patents throughout the nineteenth century. *See* Lamoreaux, *et al.*, *supra*, at 6–7 Patent attorneys had a fundamental, significant role as market intermediaries in the late nineteenth century, effectively serving as predecessors of today's patent licensing firms. This included one businessperson who "invested in patents for hat-frame formers, rails for high-speed railroads, electric railroad systems, and pliers." *Id.* at 20. Another's "investments spanned the technological gamut from envelopes to drills to arc lamps to sewing machines to railroad

signaling systems." *Id.* The wide-ranging innovation invested in by these individuals "suggests they were not primarily manufacturers seeking to improve the efficiency of their production processes or expand their product lines." *Id.*

Many of these nineteenth-century businesspersons were more similar to what we know today as angel investors or venture capitalists, but this is more likely the result of legal, market, and technological factors that are exogenous to the patent system. For instance, the twentieth century witnessed incredible innovation in the development of advanced forms of corporate structure, as well as equally innovative development of complex legal and financial mechanisms, that allowed for commercialization of patented innovation in ways that would have been outright impossible (or grossly inefficient) in the nineteenth century. Moreover, the technological advances wrought by the digital revolution—computers, the Internet, email, smartphones, wireless telecommunications, and many others—have reduced substantially the information costs and transaction costs in the commercialization of patented innovation.

Such factors are significant because they directly affect the commercialization of patented innovation; thus they cannot be ignored in assessing historical practices in the innovation industries. The creation of the Sewing Machine Combination of 1856, the first patent pool, as well as the Singer Sewing Machine Company's radical commercial innovation in mass marketing and in developing the first rent-to-own and trade-in programs, is significant evidence of the dynamic and mutually reinforcing relationship between technological, legal, and commercial

innovation. In brief, innovation breeds innovation, both commercial and technological, and the patent system is not the only variable at work in facilitating this process in promoting the progress of the useful arts, economic growth, and ultimately a flourishing society.

Within the constraints of primitive nineteenth-century corporate law and financial mechanisms, one finds an abundance of "patent agents," commercial investors, patent licensing practices, and secondary markets in patents. This is significant evidence that today's secondary markets and patent licensing business models have clear historical antecedents. Notwithstanding any legal or corporate differences, it is a mistake to think that secondary markets in patents and patent licensing are new phenomena today. Such assertions, reflected in today's conventional wisdom, are myth, not reality.

Even more important, the historical evidence confirms that the licensing market for patents provided a substantial benefit to many great inventors, especially to those whose financial means would not have allowed them to directly exploit their inventions through manufacturing or other business activity. *See* Khan, *The Democratization of Invention*, *supra*, at 219. For instance, Elijah McCoy (1844–1929), an African-American inventor, received his first patent for an automatic lubricating device in 1872. *See* U.S. Patent No. 129,843, issued July 23, 1872. McCoy lacked sufficient financial means to manufacture his improvements in engine lubricators. Instead, he sold his rights to his many patents in order to see a return on his investment of time and money. Similarly, John Francis Appleby (1840–1917) invented improved agricultural binding

mechanisms and obtained several patents in return. *See, e.g.*, U.S. Patent No. 45,466, issued Dec. 20, 1864; U.S. Patent No. 208,137, issued Sept. 17, 1878. He licensed and assigned his patents to companies that had the means for manufacturing the machines.

These few examples are by no means the only instances when nineteenth-century inventors turned to investors and businesspersons as a source of capital and commercialization. The patent licensing business model and secondary market were widespread phenomena throughout all aspects of the innovation economy in the nineteenth century. These were the crucial economic mechanisms by which inventors were able to use and dispose of their property rights, facilitating the division of labor and the availability of capital for inventors. This combination of technological and commercial innovation created the economic efficiencies that drove the innovation economy in the United States in the nineteenth century.

C. The Economic Function of Intermediaries in Patent Licensing and Secondary Markets

As in the nineteenth century, the firms that purchase or license patents play an important and complex role in the innovation economy today.

First, patent licensing firms provide the necessary capital or financial liquidity for companies and individuals to engage in productive labor in ongoing research and development. Alternatively, some patent licensing firms may make investments in intellectual property rights for the purpose of seeking a return on their investment by recovering damages for infringement of the acquired intellectual property rights. *See* Sannu K. Shrestha, *Note, Trolls*

or Market-Makers? An Empirical Analysis of Nonpracticing Entities, 110 Colum. L. Rev. 114, 119–31 (2010) (providing an overview of relevant literature and competing arguments). As noted earlier in reviewing Howe's use of third-party financing for his patent litigation efforts, this commercial practice has roots reaching back to the Antebellum Era. *See supra*, at 10.

Second, and more important, patent licensing firms provide commercial and financial expertise via division of labor and market specialization, creating efficiencies in converting an invention in the lab into real-world innovation that is sold in the marketplace. By enabling inventors to focus on inventing, rather than on financing or commercialization issues, patent licensing firms facilitate the most efficient use of human capital. Everyone benefits when inventors can spend more time and effort on creating new technological innovation. *See* Brian T. Yeh, Congressional Research Service, R42668, *An Overview of the "Patent Trolls" Debate* 8 (Apr. 16, 2013) ("The more licensing fees PAEs obtain, the more these inventors earn from their patents, and the greater their incentives to invent."); Khan, *Trolls and Other Patent Inventions*, *supra*, at 832 ("Specialized intermediaries are especially valuable in new or emerging markets and in instances where asymmetries of information are significant.").

Despite the inflammatory rhetoric about patent licensing today, history and economic theory confirm the important function of market intermediaries like patent licensing companies in the innovation economy. *See, e.g.*, Michael Risch, *Patent Troll Myths*, 42 Seton Hall L. Rev. 457, 458 (2012) (explaining that "the patents enforced by so-called

trolls—and the companies that obtained them—look a lot like other litigated patents and their owners"); Shrestha, *supra*, at 150 (noting that "NPEs can serve a valuable role in enhancing innovation by identifying and acquiring high value patents and thereby funding and encouraging some of the most successful inventors"). Empirical studies are also confirming this legitimate market function and its attendant positive social benefits. *See, e.g.*, Steve Haber & Seth H. Werfel, *Why Do Inventors Sell to Patent Trolls? Experimental Evidence for the Asymmetry Hypothesis* 3 (Nov. 3, 2015), http://ssrn.com/abstract=2552734 ("PAEs may serve an intermediary role in the market for intellectual property between individual inventors and large manufacturers."). Indeed, as the Congressional Research Service report on "patent trolls" recognized: "No one doubts that an efficient patent system needs intermediaries who reduce transaction costs between those who invent things and those who develop and commercialize them." Yeh, *supra*, at 6.

No doubt some bad actors exist today in the world of patent enforcement, just as they existed in the nineteenth century. In the nineteenth century, these bad actors were known as "patent sharks." *See* Earl W. Hayter, *The Western Farmers and the Drivewell Patent Controversy*, 16 Agricultural History 16, 22 (1942). There are also some bad actors today, such as MPHJ. *See* Federal Trade Commission, *FTC Settlement Bars Patent Assertion Entity From Using Deceptive Tactics*, Nov. 6, 2014, *at* https://www.ftc.gov/news-events/press-releases/2014/11/ftc-settlement-bars-patent-assertion-entity-using-deceptive. Beyond repeated citations to MPHJ and a handful of others, though, there is no evidence of a *systemic problem* requiring

a *systemic change* to the patent system in terms of treating patent owners differently based only on their business models. *See* Letter by Forty Economists and Law Professors to House and Senate Judiciary Committees (Mar. 10, 2015), *at* http://cpip.gmu.edu/wp-content/uploads/2015/03/Economists-Law-Profs-Letter-re-Patent-Reform.pdf (expressing "deep concerns with the many flawed, unreliable, or incomplete studies about the American patent system" that have been injected into the patent policy debates and identifying properly done studies of patented innovation).

In fact, there is substantial evidence that patent licensing and secondary markets serve a key function in an innovation economy rooted in property rights in technological innovation. For example, universities are probably the most prominent example of patent licensing entities. Many academic institutions expend extraordinary amounts on research and development, the fruits of which are later patented, but these institutions do not manufacture products, nor should they. Academic institutions should license their property rights to those firms with the knowledge and capital to commercialize this technology in the marketplace, while focusing their expertise on supporting the researchers who produce new inventions. But the anti-"patent troll" rhetoric has reached such levels that proposed patent reforms threaten to weaken the patent system such that university-based research is made much riskier, as the presidents of Boston University and Clemson University recently explained. *See* Robert A. Brown & James P. Clements, *A Patent-Troll Bill with Bad College Grades*, Wall Street Journal, Apr. 14, 2015, *at*

http://www.wsj.com/articles/a-patent-troll-bill-with-bad-college-grades-1429051694 ("[T]he Innovation Act would make universities even more reluctant to assume the risk of defending their patents.").

As with the examples above, academic institutions have a long history of focusing on innovation and recovering their investments by acting through patent licensing firms. For example, Stillman W. Robinson (1838–1910) was the first mechanical engineering professor for the University of Illinois in 1870, and later became Engineering College Dean in 1878. Robinson's patents were later licensed to companies that could manufacture his inventions. Since then, key ground-breaking technologies have been developed at academic institutions and commercialized through licensing arrangements, which were sometimes also the result of settlements of patent litigation. Such examples include: recombinant DNA technology; streptomycin, the first antibiotic effective against tuberculosis; CAT scan technology; magnetic resonance imagining (MRI); and fluoride toothpaste (first marketed as Crest by Procter and Gamble). *See, e.g., University Inventions that Changed the World, at* http://www.ipadvocate.org/pdfs/Uni%20Inventions%20Changed%20the%20World.pdf.

Recognizing the economically vital and complex role of patent licensing entities is important, and it relates to the right of patent-owners to receive enhanced damages under § 284 in two ways. First, the evidence confirms that patent licensing firms continue to serve a vital, complex role in both the patent system and in the innovation economy. Without a proper economic study using data acquired according to standard scientific norms and

then analyzed according to legitimate methodologies of empirical research, it is impossible to conclude if patent licensing firms provide a net benefit or detriment to innovation. As the classic cliché in empirical research puts it: "The plural of 'anecdote' is not 'data.'" Moreover, without proper data collected and analysis performed concerning a particular patent licensing firm, it is equally difficult to draw any conclusions that such a firm either advances or hinders the creation and commercialization of patented innovation. A mere assertion of harm to innovation, especially in the adversarial context of litigation, is not actual evidence that such harm exists.

Second, patent licensing firms exist in a wide variety of forms, and creating any presumption or rule against this business model could easily undermine the innovation-promoting function of these market intermediaries. With an understanding of the history of patent licensing and enforcement, courts should reject broad assertions that patent licensing firms inhibit innovation.

II. The Patent Litigation Rate Today is Within Historical Norms and Thus Does Not Require Special Rules for Awarding Enhanced Damages

Another assertion frequently made in support of legislative and judicial patent "reform" is that the United States is experience an alleged "explosion" in patent litigation today. *See, e.g.*, James Bessen & Michael J. Meurer, *The Patent Litigation Explosion*, 45 Loyola U. Chi. L.J. 401, 402 (2014). In a recent essay in the *Washington Post* on the topic of "patent trolls," for instance, two professors claimed that "[o]ver six times as many patent lawsuits are filed today as in 1980." James Bessen & Michael J. Meurer, *A Third of the Economy is at Stake—and*

Patent Trolls are to Blame, Washington Post, Nov. 18, 2015, at https://www.washingtonpost.com/news/in-theory/wp/2015/11/18/patent-trolls-are-costing-us-billions-they-must-be-stopped/. But such claims are inaccurate or misleading, and thus they should not inform how courts apply § 284 to the myriad patent owners with many different and complex business models.

As Zorina Khan has shown, the average litigation rate has remained relatively steady for the past 150 years, because one must assess the number of lawsuits *as a percentage of the number of patents in force*. *See* Khan, *Trolls and Other Patent Inventions*, *supra*, at 861. Otherwise, a claim such as a "six times" increase in patent litigation does not control for population growth, economic growth, and the untold number of other factors that account for increases in the total numbers of lawsuits over the course of several decades. In fact, following this basic scholarly requirement of statistical analysis in assessing patent lawsuits relative to the number of existing patents results in a conclusion that is only surprising given the overheated rhetoric and misleading statistical claims about patent litigation today: Patent litigation from 1990-2010 averaged around 1.5%, and it has increased in recent years to only around 2%. *See* B. Zorina Khan, *Facts and Fables: A Long-Run Perspective on the Patent System*, Cato Unbound (Sept. 10, 2014), *at* http://www.cato-unbound.org/2014/09/10/b-zorina-khan/facts-fables-long-run-perspective-patent-system.

Moreover, studies have shown that the uptick in the number of patent lawsuits after 2011 correlated with *Congress's changes to legal rules for patent*

litigation in the America Invents Act of 2011. *See, e.g.*, GAO Report, *supra*, at 15; Beauchamp, *The First Patent Litigation Explosion*, *supra*, at 8; Dongbiao Shen, *Misjoinder or Mishap? The Consequences of the AIA Joinder Provision*, 29 Berkeley Tech. L. J. 545, 546 (2014) (observing that "[t]he absolute number of patent suits is up dramatically since the passage" of the America Invents Act).

Even the increase of patent litigation in recent years to around 2% is entirely within historical norms. The average patent litigation rate between 1800 and 1860 was 1.65%. *See* Khan, *The Democratization of Invention*, *supra*, at 71 (averaging total litigation rate assessed per decade). But for at least two decades in the Antebellum Era, patent litigation rates were *higher* than today's litigation rate. Between 1840 and 1849, for instance, patent litigation rates were 3.6%—*more than twice* the average patent litigation rate from 1990-2010 and still well above the approximately 2% rate seen in recent years. *Id.*

Similarly, legal historian Christopher Beauchamp has shed further light on the intense patent litigation in the nineteenth century. *See* Beauchamp, *The First Patent Litigation Explosion*, *supra*, at 8 ("[T]he nineteenth century offers a highly resonant earlier example of patent law under institutional and political stress."). Beauchamp reports that more than 300 patent infringement suits were filed in 1870, and 469 patent suits were filed in 1880, in only two district courts (Southern District of New York and the Eastern District of Pennsylvania). *Id.* at 28. To put this in proper comparative perspective, Beauchamp observes: "Federal courts in

New York State in 1880 recorded more than 650 infringement suits filed, more than any single state in 2011." *Id.* at 4–5.

Even when considering the number of patents litigated relative to the number of patents in force, nineteenth-century patent litigation far exceeds the current state of patent litigation. "The national rate of litigation per patent in 2013 was less than a third of the rates in 1860 in New York City and Philadelphia alone." *Id.* at 4. In 1850, those two cities experienced ten times the number of patent suits filed, per U.S. patent in force, compared to the entire United States in 2013. *Id.* In 2013, 4,917 patents were asserted in patent infringement suits nationwide, representing 2.2 litigated patents per 1,000 in force," lower than many years in the mid-nineteenth century *Id.* at 31.

Beauchamp's direct study of court filings in the nineteenth century is consistent with Khan's earlier study of patent decisions. In fact, if anything, Beauchamp confirms that Khan undercounted the total number of patent cases, which she recognized as a possibility given that she was counting only court decisions, not filed lawsuits. Nineteenth-century patents, simply put, were much more likely to be litigated than patents issued today.

The relative numbers of patent lawsuits filed in United States federal courts are readily apparent in the follow graph from Beauchamp's study:

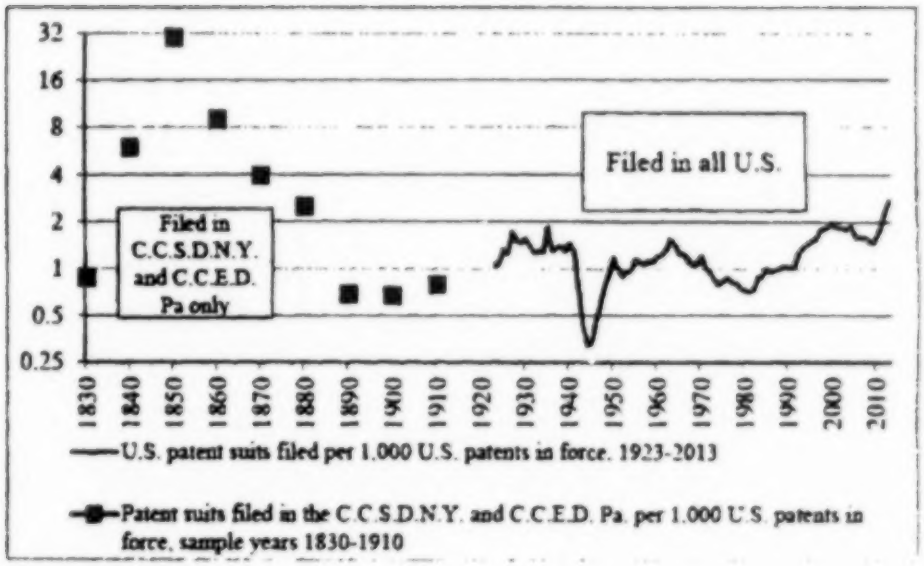

Beauchamp, *The First Patent Litigation Explosion*, *supra*, at 31.

In addition to its record-setting patent litigation rates, the nineteenth and twentieth centuries also experienced many patent wars, proving that today's smart phone war is nothing new. Numerous studies have identified many historical patent wars over cutting-edge technical innovation, including the Woodward planing machine, Goodyear's vulcanized rubber, Cyrus McCormick's reaper, and the sewing machine, to name but a few. *See id.* at 23; Mossoff, *The Sewing Machine War*, *supra*, at 182–94. Patent wars continued into the later nineteenth century and into the twentieth century as well. *See* Khan, *Trolls and Other Patent Inventions*, *supra*, at 841 ("'Patent wars' were waged in expanding markets in shoe-making, reapers and other agricultural machinery, india rubber products, motion pictures, early aviation, radio, electricity and telecommunications."). There was even a patent war over disposable diaper technology in the 1980s. *See* Audrey Quinn, *The Diaper Wars*, Life of the Law (Feb. 10, 2015), *at*

http://www.lifeofthelaw.org/2015/02/the-diaper-wars/. As one commentator has observed, "patent litigation surges are consistent with major shifts in technological developments, which introduce novel terms and uncertainty in patent claims and require infringement analysis of novel and less understood products." Ron D. Katznelson, *A Century of Patent Litigation in Perspective* 14 (Nov. 17, 2014), *at* http://papers.ssrn.com/abstract=2503140.

In conclusion, patents have long secured property rights in technological innovation to inventors and to the intermediaries in the marketplace who commercialize this innovation. A robust market in patents has existed since the very beginning of America's innovation economy in the early nineteenth century, which included both the widespread use of a patent licensing business model and the equally widespread enforcement of patents against infringers. These early developments made sense, as they reflected Adam Smith's important insight that it is the division of labor that makes possible a successful and flourishing free market economy. *See* 1 Adam Smith, *An Inquiry into the Nature and Causes of the Wealth of Nations* 7–15 (Edwin Cannan ed., Univ. Chi. Press 1976) (1776). This is exactly what America has achieved, and continues to do so today, by legally securing property rights in technological innovation. There is nothing in the history of patent licensing, of secondary markets in patents, and of patent litigation rates that suggests that today is any different in principle from what has come before. Thus, this Court should reject arguments that § 284 should be applied differently to patent licensing entities or as an alleged solution to a so-called "explosion" in patent litigation today.

CONCLUSION

For the foregoing reasons, *Amicus Curiae* Adam Mossoff respectfully submits that the Court should reject any rule, whether per se or merely as a matter of practice, that § 284 should be applied differently based on business models or other commercial features of a patent owner.

Respectfully submitted,

Matthew J. Dowd
Counsel of Record
Sushila Chanana
Eric Osborne
Andrews Kurth LLP
1350 I Street, NW
Washington, D.C. 20005
(202) 662-2700
MatthewDowd@andrewskurth.com

December 16, 2015

Counsel for
Amicus Curiae
Professor Adam Mossoff

A PATENT ON A FARM GATE TO SELL or Exchange for a No. 1 8-horse power Portable Steam Engine. Address C. H. EMBREE,
West Dresden, Yates Co., N. Y.

BENT, GOODNOW & CO.,
Boston, Mass., Agents for the sale of Patents. FOR SALE—A variety of very valuable "Rights." Send stamp for THE PATENT STAR,
Containing descriptions of each.

PATENT RIGHTS SOLD ON COMMISSION, and Valuable Inventions introduced by the most experienced Patent Salesmen in the Union. Can refer to over one hundred inventors for whom we have acted. R. B. ROBERTS & CO.,
Consulting Engineers, 15 Wall st., New York.

FOR SALE, LOW.—The Patent of a Self-Unloading and Adjusting Hay Elevator. Patented May 30th, 1854. Address, Horsham, Pa.
43 3* T. T. JARRETT, Patentee.

PATENT RIGHT FOR SALE—State Rights in a new and improved machine, designed for ship and boat spikes, patented July, 4th, 1854. This machine is entirely new, and comprises a new and patented method of pointing, whereby a great amount of labor in repairing is saved. Application should be made to F. HUMPHREY, Hoosick, N. J. 47 3*

PATENT RIGHT FOR SALE.—We are ready to dispose of the Patent Right, (or any part of it) of the best Stone Drilling Machine now in use, or we are prepared to furnish working machines at very reasonable prices, these machines will drill from 1 to 7 inches in diameter, and 100 feet deep, and can be worked by Hand, Horse, or Steam Power, one machine performing the work of twenty-five men. For further particulars and circulars with cuts address JAS. T. WHITTEMORE, Agent American Manufacturing Co., 29 State street, Boston. 40 tf

Supreme Court, U.S.
FILED
DEC 16 2015
OFFICE OF THE CLERK

No. 14-1513

In The Supreme Court of the United States

HALO ELECTRONICS, INC.,
Petitioner,

v.

PULSE ELECTRONICS, INC.,
PULSE ELECTRONICS CORPORATION
Respondent.

On Writ of Certiorari to the United States Court of Appeals for the Federal Circuit

BRIEF *AMICUS CURIAE* FOR MYKEY TECHNOLOGY, INC. IN SUPPORT OF NEITHER PARTY

ROBERT E. FREITAS
Counsel of Record
JESSICA N. LEAL
JOSHUA L. YOUNG
FREITAS ANGELL & WEINBERG LLP
350 Marine Parkway, Suite 200
Redwood Shores, CA 94065
(650) 593-6300
rfreitas@fawlaw.com

Counsel for Amicus Curiae

TABLE OF CONTENTS

Page

INTEREST OF *AMICUS CURIAE* 1

SUMMARY OF THE ARGUMENT 3

ARGUMENT 7

I. The *Seagate* Rule Improperly Limits District Court Discretion To Enhance Damages 7

A. The *Underwater Devices* "Duty Of Care" 8

B. Seagate Overcorrects The Problems Created By *Underwater Devices* 15

II. Enhancement Under Section 284 Is Committed To The Discretion of the Trial Court 20

A. A District Court "May" Enhance Damages 20

B. The Court Should Not Attempt To Define Limits On The Exercise Of Trial Court Discretion At This Time 24

CONCLUSION 26

TABLE OF AUTHORITIES

Page(s)

Cases

Aro Mfg. Co. v. Convertible Top Replacement Co., 377 U.S. 476 (1964) 10

Bard Peripheral Vascular, Inc. v. W.L. Gore & Assocs., Inc., 682 F.3d 1003 (Fed. Cir. 2012) 17

Barnhart v. Sigmon Coal Co., 534 U.S. 438 (2002) 20

Baumstimler v. Rankin, 677 F.2d 1061 (5th Cir.1982) 8

Beatrice Foods Co. v. New England Printing & Lithographing Co., 923 F.2d 1576 (Fed. Cir. 1991) 8, 9, 10

Clark v. Wooster, 119 U.S. 322 (1886) 23

Continental Can Co. v. Anchor Hocking Glass Corp., 362 F.2d 123 (7th Cir. 1966) 11

Cooter & Gell v. Hartmarx Corp., 496 U.S. 384 (1990) 25

Day v. Woodworth,
54 U.S. 363 (1851) 23

Dowling v. United States,
473 U.S. 207 (1985) 10

Fogerty v. Fantasy, Inc.,
510 U.S. 517 (1994) 21

Fromson v. Western Litho Plate & Supply Co.,
853 F.2d 1568 (Fed. Cir. 1988) 15

General Electric Co. v. Sciaky Brothers,
415 F.2d 1068 (6th Cir. 1969) 11

Gen. Motors Corp. v. Devex Corp.,
461 U.S. 648 (1983) 7, 20, 23,25

Highmark Inc. v. Allcare Health Mgmt. Sys., Inc.,
134 S. Ct. 1744, (2014) 6, 24

Hilton Davis Chem. Co. v. Warner-Jenkinson Co.,
62 F.3d 1512 (Fed. Cir. 1996) 10

iLOR, LLC v. Google, Inc.,
631 F.3d 1372 (Fed. Cir. 2011) 18

Jurgens v. CBK, Ltd.,
80 F.3d 1566 (Fed. Cir. 1996) 9, 10

Kloster Speedsteel AB v. Crucible Inc.,
793 F.2d 1565 (Fed. Cir. 1986) 14

Knorr-Bremse Systeme Fuer Nutzfahrzeuge GmbH v. Dana Corp., 383 F.3d 1337 (Fed. Cir. 2004) 12, 15

Lam, Inc. v. Johns-Manville Corp., 668 F.2d 462 (10th Cir. 1982) 8

Lopez v. Davis, 531 U.S. 230 (2001) 21

Martin v. Franklin Cap. Corp., 546 U.S. 132 (2005) 22, 25

Marvel Specialty Co. v. Bell Hosiery Mills, Inc., 386 F.2d 287 (4th Cir. 1967) 11, 12

In re MyKey Technology Inc. Patent Litigation, MDL No. 2461 (C.D. Cal No. 2:13-ml-02461) 1

Octane Fitness, LLC v. ICON Health & Fitness, Inc., 134 S. Ct. 1749 (2014) 7, 20, 21, 24

Pierce v. Underwood, 487 U.S. 552 (1988) 25

Read Corp. v. Portec, Inc., 970 F.2d 816 (Fed. Cir. 1992) 9

Professional Real Est. Invs., Inc. v. Columbia Pictures Indus., Inc., 508 U.S. 49 (1993) 18

In re Seagate Technology, LLC,
497 F.3d 1360 (Fed. Cir. 2007) (*en banc*) ..... *passim*

Sebelius v. Cloer,
133 S. Ct. 1886 (2013) 20

Sensonics, Inc. v. Aerosonic Corp.,
81 F.3d 1566 (Fed. Cir. 1996) 10

Seymour v. McCormick,
57 U.S. 480 (1853) 10

State Indus. v. Mor-Flo Indus.,
948 F.2d 1573 (Fed. Cir. 1991) 9

Stryker Corp. v. Zimmer, Inc.,
782 F.3d 649 (Fed. Cir. 2015) 18

Teese v. Huntingdon,
64 U.S. 2 (1860) 23

Underwater Devices, Inc. v. Morrison-Knudsen Co.,
717 F.2d 1380 (Fed. Cir. 1983) 4, 11, 14

Uniloc USA, Inc. v. Microsoft Corp., 632
F.3d 1292 (Fed. Cir. 2011) 18

Union Carbide Corp. v. Graver Tank & Mfg. Co., Inc., 2
82 F.2d 653 (7th Cir. 1960) 11

United States v. Burr,
25 F Cas. 30 (C.C.D. Va. 1807) (No. 14,692D) 22

Yarway Corp. v. Eur-Control USA, Inc.,
775 F.2d 268 (Fed. Cir. 1985) 8

Statutes

35 U.S.C. § 284 ..... *passim*

35 U.S.C. § 285 ..... 3, 7

Other Authorities

Knorr-Bremse Brief of *Amicus Curiae*
Conejo Valley Bar Association in Support of Neither Party 14

Carol Johns, *Knorr-Bremse Systeme Fuer Nutzfahrzeuge Gmbh v. Dana Corp.: A Step in the Right Direction for Willful Infringement*, 20 Berkeley Tech. L.J. 69 (2005) 13

Andrew M. Newton, *Encouraging Willful Infringement? Knorr-Bremse Leaves Due Care In Patent Litigation In A State Of Flux*, 15 Tex. Intell. Prop. L.J. 91 (2006) 13, 14

Maurice Rosenberg, *Judicial Discretion of the Trial Court, Viewed from Above*,
22 Syracuse L. Rev. 635 (1971) 25

Robert Greene Sterne et al., *The U.S. Patent Landscape for Electronics Companies*, Computer & Internet L., Sept. 2005 13

Edwin H. Taylor & Glenn E. Von Tersch,
A Proposal to Shore Up the Foundations of Patent Law That the Underwater Line Eroded,
20 Hastings Comm. & Ent. L.J. 721
(1998) 13, 14

INTEREST OF *AMICUS CURIAE*[1]

Amicus curiae MyKey Technology, Inc. ("MyKey") is a Gaithersburg, Maryland-based company founded by Steven Bress and Mark Menz in 2001. It owns seven United States patents, for which Mr. Bress and Mr. Menz are the inventors. MyKey is the plaintiff in a multidistrict litigation in the Central District of California in which three of its patents have been asserted. *See In re MyKey Technology Inc. Patent Litigation*, MDL No. 2461 (C.D. Cal No. 2:13-ml-02461). As a patentee and plaintiff in patent litigation, MyKey is interested in the orderly development and enforcement of the law, and is specifically interested in the way in which the damage enhancement provision of 35 U.S.C. § 284 is interpreted and applied.

MyKey's story is similar to that of many inventors, and small companies started by inventors. Though it hoped for outside investment, MyKey has been financed throughout its history exclusively by Mr. Bress and Mr. Menz, and the revenue the company has generated through limited commercialization of its products. MyKey's focus has been the development of hardware and software tools for use by law enforcement. During the development process, MyKey decided on patents as the way to protect its intellectual property, and to demonstrate value to potential investors.

---

[1] Counsel for all parties have consented to the filing of this brief, as indicated by consents lodged with the Clerk. No counsel for any party had any role in authoring this brief, and no person other than the named *amicus curiae* and its counsel has made any monetary contribution to the preparation of this brief. *See* Supreme Court Rule 37.6.

When it made an attempt to sell the first product it developed, MyKey found itself in a situation in which its competitors, all of which were larger and more established, appeared to believe they could proceed without regard for infringement of MyKey's patents. MyKey perceived its competitors to assume it would be out of business before it could achieve success in patent litigation, or that they could outspend MyKey until it gave up, should litigation ensue.

Shortly after it filed its first patent application, MyKey began discussions with one of the larger companies in the field it had identified as a likely partner. MyKey's discussions with this company were not successful, and the company began selling a competing product under its own label soon thereafter. MyKey's initial patent was in prosecution, so it had no remedy for any infringement it could prove, and this continued to be the case during the four-year period from the filing of MyKey's provisional patent application to the issuance of the patent.

During the prosecution of MyKey's patent application, MyKey's competitor had the opportunity to develop and to solidify its position in the market. Others also joined the market. MyKey made some of the competitors aware that it had a patent pending on technology important to the field, but they did not seem concerned. Once MyKey's patents began to be issued, there was no change in the attitude of its competitors or their willingness to negotiate. This presented numerous problems, among them that a small market in which MyKey might have claimed a legal advantage was getting crowded. MyKey found itself in the unfortunate position of having to consider legal means to enforce its patents.

Today, as a plaintiff approaching the culmination of the litigation process, MyKey faces the prospect that the recovery it will obtain will afford it no more than what it should have received at the outset. If enhanced damages are not available on realistic terms, there is simply no deterrent to infringement when the plaintiff is a small company like MyKey, and settlement incentives are substantially reduced. That is so even in a case such as MyKey's, in which the defendants' attempt to obtain summary judgment of invalidity has been rejected.

SUMMARY OF ARGUMENT

Under 35 U.S.C. § 284, a district court is required to award a successful plaintiff "damages adequate to compensate for the infringement but in no event less than a reasonable royalty for the use made of the invention by the infringer, together with interest and costs as fixed by the court." In addition, the court "may increase the damages up to three times the amount found or assessed." Unlike a district court's power under 35 U.S.C. § 285 to award attorneys' fees in "exceptional cases," the discretion to enhance damages under section 284 is not limited to specific classes of cases or to particular circumstances. The power to enhance damages under section 284 is committed to the sound discretion of the district court.

In the Federal Circuit era, the power of a district court under section 284 has been defined and limited in various ways that are not consistent with the language of the statute. In a series of cases, the court of appeals has held that damages may be enhanced only when the plaintiff proves that the defendant's infringement is "willful," but there is no support for a willfulness limitation in the language of

section 284, or in any articulated and substantiated purpose of the statute.

Shortly after it was established, the Federal Circuit held that a party aware of a patent has an "affirmative duty to exercise due care to determine whether or not he is infringing." *Underwater Devices, Inc. v. Morrison-Knudsen Co.*, 717 F.2d 1380, 1390 (Fed. Cir. 1983). The affirmative duty established by the court included an obligation "to seek and obtain competent legal advice from counsel *before* the initiation of any possible infringing activity." Failure to discharge the "affirmative duty" resulted in a finding of "willful infringement" and provided a foundation for the imposition of enhanced damages.

The language of section 284 contains no indication of an "affirmative duty" of the type recognized by the Federal Circuit, and no justification for enhancement of damages simply because such a duty was not met. The imposition of the "affirmative duty" resulted in chaos in the patent litigation system, and unjustified threats of treble damages. The problems resulting from the creation of an "affirmative duty" not warranted by the language of section 284 were exacerbated when the Federal Circuit held that a defendant's invocation of the attorney-client privilege would support an "adverse inference" to the effect that the defendant had failed to obtain counsel, or had done so and had been advised that its actions constituted infringement of valid U.S. patents. The Federal Circuit eventually eliminated the "adverse inference" and then overturned the imposition of an "affirmative duty of care" in *In re Seagate Technology, LLC*, 497 F.3d 1360 (Fed. Cir. 2007) (*en banc*).

Seagate retained the notion that willfulness is a prerequisite for enhancement of damages under

section 284, but it otherwise dramatically changed the analysis required to support enhancement of damages. Based on the idea that enhanced damages under section 284 are punitive damages, the Federal Circuit relied on cases interpreting statutes containing a "willfulness component" to establish a new willful infringement regime. The court of appeals determined that "proof of willful infringement permitting enhanced damages requires at least a showing of objective recklessness."

The Federal Circuit established a two-part analysis to be used to determine whether infringement is "willful." First, the plaintiff must prove that "the infringer acted despite an objectively high likelihood that its actions constituted infringement of a valid patent." This inquiry is entirely objective, and presents a question of law to be decided by the court.

The first *Seagate* inquiry allows a defendant to avoid a finding of willful infringement as long as it is able to point to at least one argument that rises above the level of "objective recklessness," regardless of whether the defendant ever considered the argument or entertained it any time before litigation. Under this standard, a deliberate copyist is not a "willful" infringer if its lawyer can present an after the fact argument that the court determines to be non-reckless.

The second, subjective aspect of the *Seagate* rule requires the plaintiff to prove that the "objectively-defined risk . . was either known or so obvious that it should have been known to the accused infringer."

Seagate is a well-intentioned attempt to correct the problems that plagued the patent system

under *Underwater Devices*, but the *Seagate* rule cannot be justified as an interpretation of section 284, or a proper application of the methodology used when federal courts interpret federal statutes.

Section 284 should be interpreted as any other federal statute would be interpreted. The interpretation of a statute begins, and typically ends, with the language of the statute. A court's inquiry comes to an end "if the statutory language is unambiguous and the statutory scheme is coherent and consistent." That is the case here.

The language of section 284 contains no support for a requirement of "willful" infringement, or for the two-part *Seagate* test. By its use of the word "may," section 284 makes clear that the determination of whether damages will be enhanced is committed to the sound discretion of the district court. Discretion must be exercised wisely, but there is no justification for the imposition of limits such as those imposed by the Federal Circuit on the process by which a district determines whether to enhance damages and, if so, the amount of the enhancement. There is no justification for a willfulness screen or a determination that damage enhancement under section 284 plays a strictly punitive role.

There is no need for this Court to attempt to define at this time the circumstances under which enhancement is or is not appropriate. The decision to enhance damages is "'multifarious and novel,' . . . and 'likely to profit from the experience that an abuse-of-discretion rule will permit to develop.'" *Highmark Inc. v. Allcare Health Mgmt. Sys., Inc.*, 134 S. Ct. 1744, 1748-49 (2014). The Court should, however, confirm that damage enhancement may be available under section 284 for compensatory as well

as punitive purposes, if a sound exercise of discretion by a district court shows enhancement to be appropriate.

ARGUMENT

I. THE *SEAGATE* RULE IMPROPERLY LIMITS DISTRICT COURT DISCRETION TO ENHANCE DAMAGES.

In an action for patent infringement, a district court "shall" award a successful plaintiff "damages adequate to compensate for the infringement but in no event less than a reasonable royalty for the use made of the invention by the infringer, together with interest and costs as fixed by the court." 35 U.S.C. § 284. A district court "may increase the damages up to three times the amount found or assessed." *Id.* Unlike the fee shifting authority created by 35 U.S.C. § 285, which is available only in "exceptional" cases, *see generally Octane Fitness, LLC v. ICON Health & Fitness, Inc.*, 134 S. Ct. 1749, 1755 (2014), a district court's power to enhance damages under section 284 is not conditioned in an explicit manner. *See Gen. Motor Corp. v. Devex Corp.*, 461 U.S. 648, 653 (1983) ("On the face of § 284, a court's authority to award interest is not restricted to exceptional circumstances, and there is no warrant for imposing such a limitation."). "When Congress wished to limit an element of recovery in a patent infringement action, it said so explicitly. With respect to attorney's fees, Congress expressly provided that a court could award such fees to a prevailing party only 'in exceptional cases.'" *Id.* "The power to award [] interest," and the power to enhance damages, "[were] not similarly restricted." *Id.*

In the Federal Circuit era, the power of a district court to enhance damages has nonetheless been governed by a series of rules with no grounding in the language of section 284 or the structure or purpose of the Patent Act. These rules have resulted in, first, chaos, as every defendant in every case faced a threat of enhancement if it did not meet a non-statutory "duty of care," and then an equal and opposite reaction that resulted in the nearly complete elimination of enhanced damages in patent cases. Neither approach is consistent with the language of section 284, and the current rule, adopted in *In re Seagate Technology, LLC*, 497 F.3d 1360 (Fed. Cir. 2007) (*en banc*) should be rejected by this Court.

A. The *Underwater Devices* "Duty Of Care."

In *Yarway Corp. v. Eur-Control USA, Inc.*, 775 F.2d 268 (Fed. Cir. 1985), the Federal Circuit found it "well-settled that enhancement of damages must be premised on willful infringement or bad faith." *Id.* at 277 (citing *Baumstimler v. Rankin*, 677 F.2d 1061, 1073 (5th Cir.1982) (enhancement of damages "is within the discretion of the District Court when the infringement is willful and wanton") and *Lam, Inc. v. Johns-Manville Corp.*, 668 F.2d 462, 474–75 (10th Cir. 1982) ("Courts have limited [enhancement] to instances in which the infringement was willful, and even then it is committed to the trial court's discretion.")). *See also Beatrice Foods Co. v. New England Printing & Lithographing Co.*, 923 F.2d 1576, 1578 (Fed. Cir. 1991) ("Although the statute does not state the basis upon which a district court may increase damages, '[i]t is well-settled that enhancement of damages must be premised on willful infringement or bad faith.'") (citing *Yarway*, 775 F.2d at 277).

These cases, and those on which they relied, made no attempt to justify a willfulness requirement in the language of section 284, but, when *Yarway* was decided in 1985, it was indeed "well-settled" that willfulness is a requirement for the enhancement of damages under section 284.

Later cases partially and incongruously explained the imposition of a willfulness requirement by noting that section 284 lacks an explicit standard for the enhancement of damages. In *Jurgens v. CBK, Ltd.*, 80 F.3d 1566 (Fed. Cir. 1996), the Federal Circuit observed that section 284 "gives no criteria for" the enhancement of damages, and stated that "[a]bsent statutory instructions," the Federal Circuit had "interpreted the increased damages part of section 284 as requiring a two step process." *Id.* at 1570 (citing *State Indus. v. Mor-Flo Indus.*, 948 F.2d 1573, 1576 (Fed. Cir. 1991)). The steps involved a factual determination as to "whether an infringer is guilty of conduct upon which increased damages may be based," and an exercise of trial court discretion determining "whether, and to what extent, to increase the damages award given the totality of the circumstances." *Id.* (citing *Read Corp. v. Portec, Inc.*, 970 F.2d 816, 826-27 (Fed. Cir. 1992)). In *Seagate*, the court of appeals similarly commented that "[a]bsent a statutory guide, we have held that an award of enhanced damages requires a showing of willful infringement." *Seagate*, 497 F.3d at 1368 (citing *Beatrice*, 923 F.2d at 1578).

Although there is no mention of a requirement of culpability in section 284, or statutory connection between enhancement of damages and wrongful intent, in *Jurgens*, the court justified the willfulness requirement with the comment that "[b]ecause

increased damages are punitive, the requisite conduct for imposing them must include some degree of culpability." 80 F.3d at 1570 (citing *Hilton Davis Chem. Co. v. Warner-Jenkinson Co.*, 62 F.3d 1512, 1523 (Fed. Cir. 1996) (*en banc*), *rev'd*, 520 U.S. 17 (1997), and *Beatrice*, 923 F.2d at 1579). *But see Seagate*, 497 F.3d at 1378-84 (Gajarsa, J., concurring). The *Seagate* court argued that the willfulness requirement is consistent with Supreme Court precedent, citing dicta in *Aro Mfg. Co. v. Convertible Top Replacement Co.*, 377 U.S. 476, 508 (1964), *Dowling v. United States*, 473 U.S. 207, 227 n.19 (1985), and *Seymour v. McCormick*, 57 U.S. 480, 489 (1853).

Judge Gajarsa's concurring opinion in *Seagate* called for elimination of "the grafting of willfulness onto section 284." *Seagate*, 497 F.3d at 1376-77. He noted that section 284 "unambiguously omits" a willfulness requirement, and saw "no principled basis for continuing to engraft a willfulness requirement onto section 284." *Id.* According to Judge Gajarsa, the proper result was to "adhere to the plain meaning of the statute and leave the discretion to enhance damages in the capable hands of the district courts." *Id.* Judge Gajarsa also addressed at length the circumstances in which enhanced damages play an entirely remedial role not dependent on a finding of culpability, *id.* at 1378-84, although various Federal Circuit decisions had, as *Jurgens* did, asserted that "enhanced damages are punitive, not compensatory." *See, e.g., Sensonics, Inc. v. Aerosonic Corp.*, 81 F.3d 1566, 1574 (Fed. Cir. 1996) (citing *Beatrice*, 923 F.2d at 1580) ("Enhancement is not a substitute for perceived inadequacies in the calculation of actual damages, but depends on a showing of willful in-

fringement or other indicium of bad faith warranting punitive damages."). *Id.*

Two years before *Yarway*, the Federal Circuit adopted what proved to be a disastrous gloss on the willfulness requirement in *Underwater Devices, Inc. v. Morrison-Knudsen Co.*, 717 F.2d 1380 (Fed. Cir. 1983). In *Underwater Devices*, the court of appeals decided that a potential infringer has an "affirmative duty to exercise due care to determine whether or not he is infringing." The affirmative duty included an obligation "to seek and obtain competent legal advice from counsel *before* the initiation of any possible infringing activity." *Id.* at 1390. If this "affirmative duty" was not honored, a finding of willfulness followed. *Id.*

The Federal Circuit derived the "affirmative duty" standard from two cases, *General Electric Co. v. Sciaky Brothers*, 415 F.2d 1068 (6th Cir. 1969), and *Marvel Specialty Co. v. Bell Hosiery Mills, Inc.*, 386 F.2d 287 (4th Cir. 1967). In *General Electric*, the Sixth Circuit upheld the district court's adoption of a special master's finding that "clearance" by the General Electric patent department and an opinion of outside counsel were insufficient to support the infringer's "honest doubt" defense to allegations of infringement. *Gen. Elec.*, 415 F.2d at 1073-74. The court "recognize[d] that a good-faith opinion by competent and independent patent counsel may be important evidence to be weighed on the issue of 'honest doubt' of patent validity," but affirmed a willfulness finding and award of enhanced damages. *Id.* at 1073 (citing *Continental Can Co. v. Anchor Hocking Glass Corp.*, 362 F.2d 123 (7th Cir. 1966) and *Union Carbide Corp. v. Graver Tank & Mfg. Co., Inc.*, 282 F.2d 653 (7th Cir. 1960).).

In *Marvel Specialty Co.*, the Sixth Circuit upheld the district court's adoption of a Special Master's findings that the president of the infringing company was aware of similarities between the patented and infringing machines, but "did not seek the opinion of competent patent attorneys" until the patentee gave notice of the infringement." *Marvel Specialty Co.*, 386 F.2d at 289. In upholding the district court's award of treble damages, the court noted that "[t]he allowance of treble damages is largely discretionary." *Id.* at 292.

The cited cases did not provide strong support for the imposition of a rigid "affirmative duty of due care," and the Federal Circuit has suggested that the *Underwater Devices* standard was a reaction to the belief that "widespread disregard of patent rights was undermining the national innovation incentive," one of the justifications for the creation of the Federal Circuit, rather than an attempt to interpret section 284. *Seagate*, 497 F.3d at 1369 (Fed. Cir. 2007) (quoting *Knorr-Bremse Systeme Fuer Nutzfahrzeuge GmbH v. Dana Corp.*, 383 F.3d 1337, 1343 (Fed. Cir. 2004)). *Underwater Devices* wreaked havoc on the patent litigation system. *See Knorr-Bremse*, 383 F.3d at 1351-52 (Dyk, J., dissenting). As Judge Dyk noted in his *Knorr-Bremse* dissent, "the due care requirement . . fostered a reluctance to review patents for fear that the mere knowledge of a patent will lead to a finding of lack of due care, a cottage industry of window-dressing legal opinions by third party counsel designed to protect the real decision-making process between litigating counsel and the company's executives, the imposition of substantial legal costs on companies seeking to introduce innovative products, and an enhanced ability of holders of dubious patents to force competitors' products off of the

market through the threat of enhanced damages. *Id.* at 1351. Others observed that innovators were discouraged from reading patents, patentees were encouraged to harass competitors, and communication between innovators and their attorneys was inhibited. *See* Carol Johns, *Knorr-Bremse Systeme Fuer Nutzfahrzeuge Gmbh v. Dana Corp.: A Step in the Right Direction for Willful Infringement*, 20 Berkeley Tech. L.J. 69, 70 (2005).

Underwater Devices discouraged innovators from reading patents because doing so risked putting the innovator on notice of patents that the innovator might infringe, triggering the affirmative duty of due care, requiring the retention of counsel, and presenting a risk of treble damages. "[C]orporations implemented policies forbidding inventors and patent attorneys from patent searching," thus "encourage[ing] their inventors and patent attorneys to engage in willful blindness so that they could claim ignorance as to the knowledge of patent disclosures of others." Andrew M. Newton, *Encouraging Willful Infringement? Knorr-Bremse Leaves Due Care In Patent Litigation In A State Of Flux*, 15 Tex. Intell. Prop. L.J. 91, 108 (2006) (citing Robert Greene Sterne et al., *The U.S. Patent Landscape for Electronics Companies*, Computer & Internet L., Sept. 2005 at 1, 18) ("[C]ompanies implemented policies to discourage or forbid patent searching by inventors and patent attorneys."). These outcomes tended to discourage the dissemination of knowledge that is a fundamental part of the tradeoff reflected in the grant of exclusive rights for a limited time to inventors willing to disclose their work to the public. *See* Edwin H. Taylor & Glenn E. Von Tersch, *A Proposal to Shore Up the Foundations of Patent Law That the Underwater Line Eroded*, 20 Hastings Comm. & Ent.

L.J. 721, 737 (1998) ("[T]his defeats the basic purpose of the patents [*sic*] laws, dissemination of information.").

The "cottage industry" described by Judge Dyk involved "opinions of counsel" obtained in response to the *Underwater Devices* duty of care. Merely sending a letter mentioning a patent, no matter how tenuous the possibility of infringement, could trigger the affirmative duty of care and require a company wishing to avoid the possibility of treble damages to engage counsel to evaluate the infringement and validity scenario relevant to the patent. On its face, *Underwater Devices* required that this be done before infringing activity began. *Underwater Devices*, 717 F.2d at 1390. Companies could thus be forced to seek opinions of counsel that cost from $10,000 to $100,000 per patent, even if the likelihood of infringement was minimal. Newton, 15 Tex. Intell. Prop. L.J. at 108 (citing Taylor & Von Tersch, 20 Hastings Comm. & Ent. L.J. at 740 ("A reliable patent opinion costs at least $10,000 if the patent has any real complexity. Indeed, an opinion on a set of 'submarine' patents will cost well over $100,000.")). *See Knorr-Bremse* Brief of *Amicus Curiae* Conejo Valley Bar Association in Support of Neither Party at 3 ("Innovators, in the face of 'cheap' notice letters, are forced to incur 'expensive' opinions of counsel as insurance against a sure inference of willfulness. This is an opportunity cost: money which could be spent on product launches is diverted to law firms.").

To make things worse, the requirement that a party aware of a patent and the possibility of infringement engage counsel was backed by an "adverse inference" recognized in *Kloster Speedsteel AB*

v. Crucible Inc., 793 F.2d 1565 (Fed. Cir. 1986), *rev'd*, *Knorr-Bremse*, 383 F.3d at 1344. Silence on the question of whether an accused infringer sought the advice of counsel before litigation, "in alleged reliance on the attorney-client privilege, would warrant the conclusion that it either obtained no advice of counsel or did so and was advised that its importation and sale of the accused products would be an infringement of valid U.S. patents." *Id.* at 1580. *See also Fromson v. Western Litho Plate & Supply Co.*, 853 F.2d 1568, 1572-73 (Fed. Cir. 1988), *rev'd*, *Knorr-Bremse*, 383 F.3d at 1344. In *Knorr-Bremse*, the Federal Circuit eliminated the possibility of an "adverse inference" arising from an infringer's failure to obtain an opinion of counsel, or, if it did, from its invocation of the attorney-client privilege. *Knorr-Bremse*, 383 F.3d at 1344. Three years later, *Seagate* overruled the willfulness standard set out in *Underwater Devices*, and instituted the two-part test that governs willfulness determination under Federal Circuit law today. *See Seagate*, 497 F.3d at 1371.

B. *Seagate* Overcorrects The Problems Created By *Underwater Devices*.

After nearly twenty-five years of *Underwater Devices*, and the elimination of the "adverse inference" associated with the invocation of the attorney-client privilege in *Knorr-Bremse*, the Federal Circuit set a new path in *Seagate*, again without regard for the actual language of the statute. Over Judge Gajarsa's dissent, the court of appeals retained the willfulness requirement, but fashioned a new test, intended to eliminate various problems resulting from *Underwater Devices*, and apparently calculated to limit the circumstances in which enhancement would be available. *See id.* at 1369 ("Since *Underwa-*

ter Devices, we have recognized the practical concerns stemming from our willfulness doctrine, particularly as related to the attorney-client privilege and work product doctrine."); *id.* ("Recently, in *Knorr-Bremse*, we addressed another outgrowth of our willfulness doctrine."). *See also id.* at 1384-85 (Newman, J., concurring) ("However, experience, and the exhortations of the *amici curiae*, have persuaded me that we should reduce the opportunities for abusive gamesmanship that the 'due care' standard apparently has facilitated."). "In light of Supreme Court opinions since *Underwater Devices* and the practical concerns facing litigants under the current regime," the Federal Circuit overruled *Underwater Devices*, and adopted an entirely new approach to willful infringement and damage enhancement under section 284.

The court of appeals stated that "the duty of care announced in *Underwater Devices* sets" a "threshold for willful infringement" that is "lower" than the standard adopted under statutes containing the word "willful," and "more akin to negligence" than to the accepted understanding of "willful" in the civil context. *Id.* at 1371. Relying on the idea that enhanced damages under section 284 are "punitive," the Federal Circuit determined the *Underwater Devices* standard to be "inconsistent with Supreme Court precedent," referring to cases interpreting statutory language including a "willful" requirement. *Id.* The court "overrule[d] the standard set out in *Underwater Devices*," and decided that "proof of willful infringement permitting enhanced damages requires at least a showing of objective recklessness." *Id.*

The initial *Seagate* inquiry is focused on the question of whether the defendant's position is "objectively reckless." The question is whether the "the infringer acted despite an objectively high likelihood that its actions constituted infringement of a valid patent." *Seagate*, 497 F.3d at 1371. *See Bard Peripheral Vascular, Inc. v. W.L. Gore & Assocs., Inc.*, 682 F.3d 1003, 1006 (Fed. Cir. 2012) ("*Seagate* . . requires a threshold determination of objective recklessness"). This inquiry is entirely objective, and presents a question of law to be decided by the court. *See Seagate*, 497 F.3d at 1371 ("The state of mind of the accused infringer is not relevant to this objective inquiry."); *Bard*, 682 F.3d at 1006 (objective recklessness "determination entails an objective assessment of potential defenses based on the risk presented by the patent"); *id.* at 1006-07 ("This court therefore holds that the objective determination of recklessness, even though predicated on underlying mixed questions of law and fact, is best decided by the judge as a question of law subject to *de novo* review.").

As the petitioners have pointed out, even a deliberate copyist, aware of a patent, intending to misappropriate the invention of another for its own profit, and caught red handed by a jury verdict of infringement – as "willful" an infringer as can be imagined – can avoid enhancement as long as its litigation counsel can articulate at least one non-infringement or validity argument that rises above the level of "objective recklessness." *See id. See* Petitioner's Br. in No. 14-1520 at 13.[2] In *Stryker*

[2] *Seagate* refers to "objective recklessness," a concept that appears to match the standard for "sham" litigation established by this Court in *Professional Real Est. Invs., Inc. v. Columbia*

Corp. v. Zimmer, Inc., 782 F.3d 649 (Fed. Cir. 2015), one of the cases now before the Court, there was evidence "that Zimmer 'all but instructed its design team to copy Stryker's products,'" *id.* at 661, but the Federal Circuit concluded that "[a]n objective assessment of the case shows that Zimmer presented reasonable defenses to all of the asserted claims of Stryker's patents." *Id.* The argument by which a finding of objective recklessness is defeated at trial (or on appeal) need never have occurred to the defendant, which can escape liability for enhanced damages even if knowing infringement was an intentional corporate policy. *See* Petitioner's Br. in No. 14-1520 at 13.

The subjective aspect of *Seagate* requires the patentee to prove that the "objectively-defined risk . was either known or so obvious that it should have been known to the accused infringer." *Seagate*, 497 F.3d at 1371. In addition to disclaiming recognition that it was infringing, a defendant has the oppor-

---

Pictures Indus., Inc., 508 U.S. 49 (1993). *See Bard*, 682 F.3d at 1008 ("On remand, therefore, the court should determine, 'based on the record ultimately made in the infringement proceedings,' whether a 'reasonable litigant could realistically expect' those defenses to succeed.") (citing *iLOR, LLC v. Google, Inc.*, 631 F.3d 1372, 1378 (Fed. Cir. 2011) and *Professional Real Est. Invs.*, 508 U.S. at 60). The Federal Circuit commonly poses the question of whether a defendant's position is "reasonable," however, a standard that requires more than rising above "objective recklessness." *See Bard*, 682 F.3d at 1008; *Uniloc USA, Inc. v. Microsoft Corp.*, 632 F.3d 1292, 1310 (Fed. Cir. 2011) (objective recklessness is not present when the defendant's "position is susceptible to a reasonable conclusion of no infringement"). *See also Stryker Corp.*, 782 F.3d at 662 ("In sum, we find that Zimmer's defenses to the infringement of each patent claim that Stryker asserted were not objectively unreasonable, and, therefore, it did not act recklessly.").

tunity to present *Underwater Devices*-like opinions of counsel to justify its profession of innocence. Counsel might testify, for example, that he or she advised the defendant that a patent in suit was invalid or was not infringed, and a representative of the defendant might assert subjective, assertedly reasonable reliance on the litigation-inspired opinion.

Seagate is a well-intentioned attempt to correct the problems that plagued the patent system under *Underwater Devices*, but the *Seagate* rule cannot be justified as an interpretation of section 284, or a proper application of the methodology used when federal courts interpret federal statutes.

As the petitioners have explained, *see* Petitioner's Br. in No. 14-1513 at 21-24, in No. 14-1520 at 51-53, *Seagate* also goes too far. The *Seagate* test is not aimed at obvious types of willful infringement, assuming willful infringement is the sole, or an important, focus of section 284, and is not calculated to strike a proper balance between making enhancement a realistic threat in nearly every case, as *Underwater Devices* did, and the alternative of rendering the enhancement feature of section 284 nearly a dead letter, as has been the case under *Seagate*. The result is that individual inventors and small companies such as MyKey are unable to obtain enhanced damages in many cases in which infringement can fairly be said to be "willful," and in others in which a reasoned case for enhancement can be justified under the language that actually appears in section 284.

II. ENHANCEMENT UNDER SECTION 284 IS COMMITTED TO THE DISCRETION OF THE TRIAL COURT.

A. A District Court "May" Enhance Damages.

The interpretation of a statute must begin, and it typically ends, with the language of the statute. *Sebelius v. Cloer*, 133 S. Ct. 1886, 1893 (2013); *see id.* at 1895 ("Our 'inquiry ceases [in a statutory construction case] if the statutory language is unambiguous and the statutory scheme is coherent and consistent.'") (quoting *Barnhart v. Sigmon Coal Co.*, 534 U.S. 438, 450 (2002)). *See also Octane Fitness*, 134 S. Ct. at 1755-56 ("Our analysis begins and ends with the text of § 285."). As this Court's patent law decisions show, the principles of statutory interpretation that govern the Patent Act are no different from those applicable to other federal statutes. This case provides another "opportunity to bring patent law regarding damages into the mainstream of the general law," and again to make clear that there is not a "special niche for the realm of patent law" when it comes to the interpretation of statutes. *See Seagate*, 497 F.3d at 1382 (Gajarsa, J., concurring).

The language of section 284 contains no support for a requirement of "willful" infringement, it does not identify a "duty of care" that must be met on pain of near automatic enhancement, and it contains no hint of a multi-step, objective/subjective test incorporating concepts taken from cases involving other subjects. As this Court observed in *General Motors Corp.*, "when Congress wished to limit an element of recovery in a patent infringement action, it said so explicitly," by limiting fee shifting to "exceptional cases." 461 U.S. at 653. *See also Octane*

Fitness, 134 S. Ct. at 1755-56 ("This text is patently clear. It imposes one and only one constraint on district courts' discretion to award attorney's fees in patent litigation: The power is reserved for 'exceptional' cases."). Section 284 does not contain an exceptionality requirement, and it says nothing else justifying either of the pendulum swings that have governed the application of section 284 during the Federal Circuit era.

Section 284 states that a district court "shall" award a successful plaintiff "damages adequate to compensate for the infringement," and that it "may" increase those damages "up to three times the amount found or assessed." 35 U.S.C. § 284. "The word 'may' clearly connotes discretion." *Fogerty v. Fantasy, Inc.*, 510 U.S. 517, 533 (1994)); *see also Lopez v. Davis*, 531 U.S. 230, 241 (2001) (explaining that the discretionary nature of the "permissive 'may'" is especially apparent where Congress uses the "mandatory 'shall'" in the same section). Under the plain language of section 284, a district court has discretion to enhance damages or not, and, if enhancement is determined to be appropriate, to decide the level of enhancement, "up to three times the amount found [by the jury] or assessed [by the court]." A decision to enhance does not require copying or other "willful" or "exceptional" infringement, litigation misconduct, bad faith, or any other narrowly defined set of circumstances. Like many other decisions made by district judges every day, enhancement decisions are committed to the sound discretion of the district court.

The fact that enhancement, and the level of enhancement, are "left to the district court's discretion, with no heavy congressional thumb on either

side of the scales, does not mean that no legal standard governs that discretion." *Martin v. Franklin Cap. Corp.*, 546 U.S. 132, 139 (2005). As Chief Justice Marshall said in *United States v. Burr*, 25 F. Cas. 30, 35 (C.C.D. Va. 1807) (No. 14,692D), "a motion to [a court's] discretion is a motion, not to its inclination, but to its judgment; and its judgment is to be guided by sound legal principles." "Discretion," this Court said in *Martin*, "is not whim, and limiting discretion according to legal standards helps promote the basic principle of justice that like cases should be decided alike." *Martin*, 546 U.S. at 139.

There are situations in which limits on district court discretion may be appropriate in the absence of "express legislative restrictions," as in fee shifting cases where the Court has found limits based on the "equitable considerations" tied to the "large objectives of the relevant Act," *see Martin*, 546 U.S. at 139-40. The rules set out in Federal Circuit case law have not been connected to, and have not reflected appropriately, any identified "large objectives" of the Patent Act. Instead, the Federal Circuit has sought to fulfill policy perspectives about how best to serve the interests reflected in the prevailing wisdom of a given time, or to correct excess in past attempts to meet policy objectives. This is not the correct process of statutory interpretation, and it is not the process followed by this Court in the search for limits on the exercise of discretion granted by Congress, but not confined in an explicit way.

The "plain meaning" approach to section 284 is in harmony with the adequate compensation-focused purpose and the history of the statute. In *General Motors* this Court explained that "Congress' overriding purpose" in enacting section 284 was "affording

patent owners complete compensation." *Gen. Motors Corp.*, 461 U.S. at 655. In patent cases pre-dating section 284 and the 1946 amendments to the patent statute, this Court recognized that complete compensation of a successful patent plaintiff must account for a range of circumstances. *See Clark v. Wooster*, 119 U.S. 322, 326 (1886) ("There may be damages beyond [a reasonably royalty], such as the expense and trouble the plaintiff has been put to by the defendant, and any special inconvenience he has suffered from the wrongful acts of the defendant; but these are more properly the subjects of allowance by the court under the authority given to it to increase the damages."); *Teese v. Huntingdon*, 64 U.S. 2, 9 (1860) ("[I]f, in the opinion of the court, the defendant has not acted in good faith, or has caused unnecessary expense and injury to the plaintiff, the court may render judgment for a larger sum, not exceeding three times the amount of the verdict."). *Day v. Woodworth*, 54 U.S. 363, 372 (1851) ("[I]f, in the opinion of the court, the defendant has not acted in good faith, or has been stubbornly litigious, or has caused unnecessary expense and trouble to the plaintiff, the court may increase the amount of the verdict, to the extent of trebling it."). These remedial considerations remain, and they are worthy of consideration by district courts in the exercise of the discretion granted them by section 284.

The language of section 284 and the cases do not preclude a role for conduct-based screens, but neither do they allow the formal imposition of a willfulness screen or assign a strictly punitive role to section 284 enhancement. The proper exercise of a district court's discretion should include thorough consideration of all of the circumstances that might bear on the possibility or extent of enhancement in a

given case, unburdened by limits of the type that Congress could have imposed, but did not.

B. The Court Should Not Attempt To Define Limits On The Exercise Of Trial Court Discretion At This Time.

The approach to section 284 taken by the Federal Circuit in *Underwater Devices*, *Seagate*, and other cases is not consistent with the language of section 284, or the ordinary rules of statutory interpretation. As it did in *Octane Fitness*, the Court should reject the *Seagate* formula and hold that section 284 allows a district court to enhance damages, when, in the exercise of its sound discretion, based on all of the facts and circumstances, the court concludes enhancement is in order, and that the statute similarly authorizes a district court to determine the extent, up to three times the damages awarded by the jury or the court, to which enhancement is in order.

MyKey respectfully suggests that the Court should not attempt now to establish a formula for use by district courts in the determination of whether damages should be enhanced, or to provide guidelines on the exercise of the discretion afforded by section 284. The decision to enhance damages is "'multifarious and novel,' . . . and 'likely to profit from the experience that an abuse-of-discretion rule will permit to develop.'" *Highmark Inc. v. Allcare Health Mgmt. Sys., Inc.*, 134 S. Ct. 1744, 1748-49 (2014). Past experience shows that an attempt to articulate a list of factors weighing in favor or against enhancement may lead to rigidity and the development of "rules" not in keeping with the flexi-

ble standard intended by section 284's grant of discretion.

The Court should, however, make clear that district courts may exercise their discretion to enhance damages for compensatory, as well as punitive, reasons. Nothing in the language of section 284 limits a district court's authority to enhance damages to circumstances justifying or requiring punitive measures. To the extent a "large objective" of section 284, *see Martin*, 546 U.S. at 139-40, can be discerned, it is to provide adequate compensation to the patentee, and that objective is not well served by a restriction on the exercise of district court discretion forbidding compensatory enhancement of damages.

In prior case involving statutes that grant discretion to district courts, this Court has recognized that development of the law through experience is desirable. *See Cooter & Gell v. Hartmarx Corp.*, 496 U.S. 384, 405 (1990) ("An appellate court's review of whether a legal position was reasonable or plausible enough under the circumstances is unlikely to establish clear guidelines for lower courts; nor will it clarify the underlying principles of law."); *Pierce v. Underwood*, 487 U.S. 552, 561-62 (1988) (quoting Maurice Rosenberg, *Judicial Discretion of the Trial Court, Viewed from Above*, 22 Syracuse L. Rev. 635, 638 (1971) ("One of the 'good' reasons for conferring discretion on the trial judge is the sheer impracticability of formulating a rule of decision for the matter in issue. Many questions that arise in litigation are not amenable to regulation by rule because they involve multifarious, fleeting, special, narrow facts that utterly resist generalization—at least, for the time being."). *See also Gen. Motors Corp.*, 461 U.S. at 657 ("There may be other circumstances in which it

may be appropriate not to award prejudgment interest. We need not delineate those circumstances in this case."). A similar approach should be taken here.

CONCLUSION

The approach taken by the Federal Circuit from *Underwater Devices* to *Seagate* and beyond has failed to take proper account of the language of section 284, and has improperly restricted the discretion granted district courts by section 284. The overly restrictive *Seagate* rule should be rejected in favor of a flexible authorization of the resolution of enhancement disputes through the sound exercise of discretion by district courts.

December 16, 2015

Respectfully submitted,

ROBERT E. FREITAS
Counsel of Record
JESSICA N. LEAL
JOSHUA L. YOUNG
FREITAS ANGELL & WEINBERG LLP
350 Marine Parkway, Suite 200
Redwood Shores, California 94065
(650) 593-6300
rfreitas@fawlaw.com

Attorneys for *Amicus Curiae* MyKey Technology, Inc.

Nos. 14-1513, 14-1520

Supreme Court, U.S.
FILED
DEC 16 2015
OFFICE OF THE CLERK

IN THE

Supreme Court of the United States

HALO ELECTRONICS, INC.,

Petitioner,

v.

PULSE ELECTRONICS, INC., PULSE ELECTRONICS CORPORATION,

Respondents.

On Writs of Certiorari to the United States Court of Appeals for the Federal Circuit

---

BRIEF OF NOKIA TECHNOLOGIES OY AND NOKIA USA INC. AS *AMICI CURIAE* IN SUPPORT OF PETITIONERS

JOHN D. HAYNES
Counsel of Record
LINDSEY YEARGIN
ALSTON & BIRD LLP
1201 W. Peachtree St.
Atlanta, GA 30309
Tel. (404) 881-7000
john.haynes@alston.com

Counsel for Amici Curiae

December 16, 2015

TABLE OF CONTENTS

INTEREST OF THE *AMICI CURIAE* 1

SUMMARY OF ARGUMENT 3

ARGUMENT 6

I. AN AWARD OF ENHANCED DAMAGES UNDER § 284 SHOULD NOT REQUIRE A FINDING OF WILLFULNESS 6

A. The Statutory Language of § 284 Does Not Contain a Willfulness Requirement 6

B. The Federal Circuit's Grafting of a Willfulness Requirement onto § 284 is Contrary to the Legislative History of the Statute and Ignores the Compensatory Aspect of Enhanced Damages 8

II. THE FEDERAL CIRCUIT'S OVERLY RIGID TEST IS INAPPROPRIATE EVEN WHEN WILLFULNESS IS AT ISSUE 13

A. This Court's Rejection of the Federal Circuit's Unduly Rigid Test for Fee-Shifting Under § 285 Favors Rejection of the Federal Circuit's Equally Rigid Test Under § 284 14

B. The Federal Circuit's Willfulness Test Encourages Free-Riding by Infringers and Discourages Innovation 18

III. THE FEDERAL CIRCUIT IMPROPERLY REQUIRES PATENT OWNERS TO ESTABLISH THEIR ENTITLEMENT TO ENHANCED DAMAGES BY CLEAR AND CONVINCING EVIDENCE 24

A. The High Standard of Proof Creates an Unreasonable Burden for a Patent Owner to Obtain Enhanced Damages 24

B. This Court's *Octane Fitness* Decision Confirms that a Heightened Standard of Proof Is Not Required to Award Enhanced Damages 25

IV. ENHANCED DAMAGES DETERMINATIONS SHOULD BE REVIEWED WITH DEFERENCE TO THE FACTFINDER 27

CONCLUSION 28

TABLE OF AUTHORITIES

Page(s)

CASES

Apple Inc. v. Motorola, Inc.,
757 F.3d 1286 (Fed. Cir. 2014).....10, 12, 21

Bard Peripheral Vascular, Inc. v. W.L. Gore & Assocs., Inc.,
682 F.3d 1003 (Fed. Cir. 2012).....17, 25

Brooks Furniture Mfg., Inc. v. Dutailier Int'l, Inc.,
393 F.3d 1378 (Fed. Cir. 2005).....14, 16

Datascape Corp. v. SMEC, Inc.,
879 F.2d 820 (Fed. Cir. 1989)..... 19

eBay Inc. v. MercExchange, L.L.C.,
547 U.S. 388 (2006) 12

Gen. Motors Corp. v. Devex Corp.,
461 U.S. 648 (1983) 7

Grogan v. Garner,
498 U.S. 279 (1991) 23

Halo Elecs., Inc. v. Pulse Elecs., Inc.,
769 F.3d 1371 (Fed. Cir. 2014).....15, 16, 18

Herman & MacLean v. Huddleston,
459 U.S. 375 (1983) 23, 24

Highmark Inc. v. Allcare Health Management System, Inc.,
134 S. Ct. 1744, 1748-49 (2014) 5, 26

iLOR, LLC v. Google, Inc.,
631 F.3d 1372 (Fed. Cir. 2011).....16, 17

In re Seagate Tech., LLC,
497 F.3d 1360 (Fed. Cir. 2007).....passim

King Instruments Corp. v. Perego,
65 F.3d 941 (Fed. Cir. 1995)..... 10

Octane Fitness, LLC v. ICON Health & Fitness, Inc.,
134 S. Ct. 1749.....passim

Professional Real Estate Investors, Inc. v. Columbia Pictures Industries, Inc.,
508 U.S. 49 (1993) 15

Resqnet.com, Inc. v. Lansa, Inc.,
533 F. Supp. 2d 397 (S.D.N.Y. 2008) 18

Rite-Hite Corp. v. Kelley Co.,
819 F.2d 1120 (Fed. Cir. 1987).....10, 19

Smith v. Wade,
461 U.S. 30 (1983) 25

Stickle v. Heublein,
716 F.2d 1550 (Fed. Cir. 1983)..... 10

TE-TA-MA Truth Foundation-Family of URI, Inc. v. World Church of the Creator, 392 F.3d 248 (7th Cir. 2004) 7

TGIP, Inc. v. AT&T Corp., 527 F. Supp. 2d 561 (E.D. Tex. 2007) 18

STATUTES

15 U.S.C. § 15(a) 24

17 U.S.C. § 504(c)(2) 7

35 U.S.C. § 284 ..... passim

35 U.S.C. § 285 ..... passim

Patent Act of 1793, ch. 11, § 5, 1 Stat. 318, 322 (repealed 1836) 8

Patent Act of 1836, ch. 357, § 14, 5 Stat. 117, 123 8

PATENT LAWS 9

OTHER AUTHORITIES

James Ryan, *A Short History of Patent Remedies* 6 CYBARIS AN INTELL. PROP. L. REV. 150, 182-83 (2015) 17

Justin P. Huddleson, *Objectively Reckless: A Semi-Empirical Evaluation of In re Seagate*, 15 B.U.J. SCI. & TECH. L. 102, 134 (2009) 21

Sen. John Ruggles, S. Report Accompanying Senate Bill No. 239..... 9

INTEREST OF THE *AMICI CURIAE*[1]

Amici curiae are Nokia Technologies Oy and Nokia USA Inc. (collectively, "Nokia"). Nokia is a global leader and innovator in the telecommunications equipment and services industry. The Nokia group of companies have cumulatively invested over $70 billion in research and development relating to mobile communications. As a result of this substantial commitment, Nokia currently owns more than 10,000 patent families, including a large number of standard-essential patents. Nokia continues to invest heavily in research and development and to license and expand its industry-leading patent portfolio. For example, Nokia continues to develop and license innovations that are powering the next revolution in computing and mobility: the "programmable world" where intelligent connections bring millions of everyday objects online. This work includes a team of experts in areas including digital healthcare, digital multimedia, imaging and sensing, wireless

---

[1] Pursuant to Supreme Court Rule 37.6, counsel for *amici curiae* state that no counsel for a party authored this brief in whole or in part, or made a monetary contribution intended to fund the preparation or submission of this brief, and no other person other than *amici curiae*, its members, or its counsel made such a contribution. Pursuant to Supreme Court Rule 37.3, counsel for *amici curiae* represent that all parties have consented to the filing of this brief. Halo Electronics, Inc., Pulse Electronics, Inc., and Stryker Corp. filed notices of their consent to the filing of all *amicus curiae* briefs in support of either party or of neither party, and Zimmer, Inc. gave written consent to counsel for *amici curiae* to file this *amici curiae* brief.

connectivity and power management, advanced materials, and others.

Nokia and its parent company have been involved in numerous patent cases in U.S. district courts, both as a plaintiff and a defendant, including cases where enhanced damages under 35 U.S.C. § 284 were sought by or against Nokia. Nokia is a significant patent owner that might seek such enhanced damages for certain kinds of patent infringement in U.S. district courts.

Nokia's interest in this case is to advocate for the appropriate statement and application of legal standards governing enhanced damages under 35 U.S.C. § 284, and to ensure that those standards balance the interests of patent holders and those of users of patented technology. Companies like Nokia must be assured that their past, present, and future substantial research and development efforts are protectable under the U.S. patent regime and that, upon an appropriate request and showing, they are able to receive proper remediation and adequate compensation, including recovery of enhanced damages in appropriate circumstances, for unauthorized uses of their patented technologies. Although Nokia does not take any ultimate position on the facts of this specific case, Nokia supports Petitioner's position that this Court should reject the Federal Circuit's overly rigid test governing an award of enhanced damages under 35 U.S.C. § 284 and provide guidance that ensures a flexible approach to awarding enhanced damages in appropriate cases.

SUMMARY OF ARGUMENT

The Federal Circuit has abrogated the plain meaning of 35 U.S.C. § 284 in four ways. Section 284 of the Patent Act grants to trial courts the discretion to award enhanced damages in patent cases. 35 U.S.C. § 284. Despite the plain discretionary language of the statute, the Federal Circuit has (i) injected a willfulness requirement into language silent about willfulness, (ii) imposed an overly rigid two-part test for satisfying that willfulness requirement, (iii) required plaintiffs to meet an unreasonably high clear and convincing burden of proof under its manufactured test, and (iv) established *de novo* review of the district court's decision regarding whether that burden was satisfied. Each of these requirements conflicts with the plain language of the statute and recent guidance from the Supreme Court. They also make it unreasonably difficult for patent owners to obtain enhanced damages in appropriate cases, thus encouraging continued infringement and discouraging further investment in innovation.

An award of enhanced damages under § 284 should not require a finding of willfulness, even though such a finding could certainly be sufficient to support such an award. There is nothing in the language of the statute that supports a willfulness requirement, and the legislative history of the statute supports the conclusion that no such requirement was necessary for an enhancement award in a given case. Additionally, the Federal Circuit's grafting of a willfulness requirement onto §

284 ignores the compensatory aspect of enhanced damages. Courts should have discretion to award enhanced damages when appropriate under the particular facts of a given case, even when no willful infringement is found.

Moreover, even in cases where willfulness is present, the Federal Circuit's overly rigid two-part test for proving such willfulness should be rejected. The Federal Circuit's overly rigid standard for awarding enhanced damages ignores the permissive language of the statute and improperly excludes circumstances where an enhanced fee award may be appropriate. This Court recently recognized – in the context of attorney fees awards under section 285 of the Patent Act – that such rigid tests are not warranted and improperly limit the exercise of the district court's discretion. *Octane Fitness, LLC v. ICON Health & Fitness, Inc.*, 134 S. Ct. 1749, 1755-56. This Court's reasoning in *Octane Fitness* is equally applicable in the context of enhanced damages awards, and a similar approach should be applied. Requiring a similar approach to enhanced damages under § 284 as that applied to fee shifting under § 285 properly balances the interests of patent holders against those of accused infringers to ensure that patent holders are properly compensated. This approach further ensures that improper conduct, such as copying, reverse hold-up or holding out in licensing discussions, bad faith, and/or other dilatory negotiation tactics, is both deterred and remediated when the facts of a given case warrant an award of enhanced damages.

The Federal Circuit also improperly requires a patent owner to establish its entitlement to enhanced damages under § 284 by clear and convincing evidence. This high standard of proof places an unreasonable burden on a patent owner to obtain enhanced damages. It also directly contradicts this Court's reasoning in *Octane Fitness*, which held that such a high standard of proof should not apply to discretionary damages awards. *Id.*

Finally, the Federal Circuit's current practice of reviewing enhanced damages determinations *de novo* is contrary to this Court's decision in *Highmark Inc. v. Allcare Health Management System, Inc.*, in which the Court held that awards of attorney fees under § 285 should be reviewed for abuse of discretion. 134 S. Ct. 1744, 1748-49 (2014). As the district court is in the best position to determine whether an award of enhanced damages is appropriate under the particular facts of each case, deference should be given to the district court's conclusions when reviewing such decisions.

The appropriate standards governing enhanced damages awards are of utmost importance to the patent community. This Court should therefore reevaluate the current judicially-created standard for an award of enhanced damages under § 284 in order to correct each of the four errors present in the Federal Circuit's jurisprudence. The current approach lacks support in the statute, conflicts with the guidance of this Court, and is out of line with important policy considerations.

ARGUMENT

I. AN AWARD OF ENHANCED DAMAGES UNDER § 284 SHOULD NOT REQUIRE A FINDING OF WILLFULNESS

A. The Statutory Language of § 284 Does Not Contain a Willfulness Requirement

Section 284 of the Patent Act states that "the court may increase the damages up to three times the amount found or assessed." 35 U.S.C. § 284. This language places no limits on the factual circumstances under which the district court may exercise its discretion. The statute does not require any subjective inquiry into the mind of the accused infringer, nor does it identify any specific criteria that must be met before the district court may exercise its discretion to award enhanced damages. Despite the broad discretion afforded by § 284, the Federal Circuit has held that increased damages are only available when a defendant is guilty of willful infringement. *See In re Seagate Tech., LLC*, 497 F.3d 1360, 1368 (Fed. Cir. 2007). This added requirement of willfulness is an error that must be corrected.

When grafting a willfulness requirement onto § 284, the Federal Circuit sought guidance from the enhanced damages provision in copyright law. *See id.* at 1370. Although copyright law may provide guidance in certain circumstances, the Federal Circuit's reliance on copyright law in this context was improper. Unlike § 284 of the Patent Act, in the Copyright Act, Congress explicitly set forth a

willfulness requirement for a finding of enhanced damages. 17 U.S.C. § 504(c)(2) ("In a case where the copyright owner sustains the burden of proving, and the court finds, that infringement was committed willfully, the court in its discretion may increase the award of statutory damages...."). The glaring absence of such a requirement in the Patent Act suggests that Congress did *not* intend for there to be such a requirement. *See Seagate*, 497 F.3d at 1381-82 (Gajarsa, J., concurring). Clear statements from Congress should exist before placing limits on recovery for patent infringement. *See Gen. Motors Corp. v. Devex Corp.*, 461 U.S. 648, 653 (1983) ("When Congress wished to limit an element of recovery in a patent infringement action, it said so explicitly."). Conversely, statutes lacking clear statements generally have been interpreted as giving courts broad equitable discretion to award enhanced damages. *See, e.g., TE-TA-MA Truth Foundation-Family of URI, Inc. v. World Church of the Creator*, 392 F.3d 248, 261 (7th Cir. 2004) ("The broad discretion accorded a district court under § 1117(a)...is inconsistent with an interpretation that restricts a prevailing plaintiff to recovery of fees only in cases of willful infringement."). Given the broad language of § 284 and the omission of any willfulness requirement, the decision regarding whether to award enhanced damages should be left to the discretion of the court upon consideration of the totality of the circumstances, and not limited to particular circumstances involving willful infringement.

B. The Federal Circuit's Grafting of a Willfulness Requirement onto § 284 is Contrary to the Legislative History of the Statute and Ignores the Compensatory Aspect of Enhanced Damages

When the Federal Circuit first set forth its current willfulness standard, two Federal Circuit judges advocated for the removal of any such willfulness requirement from § 284. *Seagate*, 497 F.3d at 1376-84 (Gajarsa, J., concurring). As Judges Gajarsa and Newman set forth in their concurring opinion, the judicially manufactured willfulness requirement finds no support in the legislative history, ignores the compensatory function of enhanced damages, and improperly limits judicial discretion.

In Zimmer, Inc.'s response to the petition for *certiorari* in the consolidated case *Stryker, Inc. v. Zimmer, Inc.*, it states that enhanced damages were first introduced by the Patent Act of 1836. (Zimmer, Inc.'s Brief in Opposition ("Zimmer's Response") at 16). This is not correct. The Patent Act of 1793 not only included an enhanced damages provision, but it also mandated that such damages be awarded in each case of infringement. Patent Act of 1793, ch. 11, § 5, 1 Stat. 318, 322 (repealed 1836). The Patent Act of 1836 removed this mandatory requirement and instead granted courts the discretion to award enhanced damages "according to the circumstances of the case." Patent Act of 1836, ch. 357, § 14, 5 Stat. 117, 123. Zimmer asserts that the enhanced

damages provision set forth in the 1836 Patent Act "required a showing of willful and wanton infringement." (Zimmer Response at 16). To the contrary, as explained by Judge Gajarsa in his *Seagate* concurrence, "[n]othing in the phrase 'according to the circumstances of the case' [in the 1836 Act] implies that the district court's discretion to award enhanced damages is contingent upon a finding of willfulness." *Seagate*, 497 F.3d at 1377 (Gajarsa, J., concurring). Moreover, a patent law textbook written while the 1836 Patent Act was in effect stated that "[i]ncreased damages may properly be awarded by a court, where it is necessary to award them in order to prevent a defendant infringer from profiting from his own wrong, whether that wrong was intentional or was unwitting." ALBERT H. WALKER, TEXT-BOOK OF THE PATENT LAWS OF THE UNITED STATES OF AMERICA 423 (2d ed. 1889). The purpose of the 1836 statute was to provide discretion to the courts to enhance patent damages, even in cases where no willful infringement occurred. The enhanced damages provision of the Patent Act has not substantively changed since the 1836 Act and has never included any willfulness requirement.

Requiring willfulness for an award of enhanced damages under § 284 also ignores the compensatory aspect of enhanced damages awards. As originally drafted, discretionary enhanced damages were designed, at least in part, to ensure that the patent owner was properly and adequately compensated for infringement. *See* Sen. John Ruggles, S. Report Accompanying Senate Bill No.

239, at 6 (Apr. 28, 1836) (recognizing that one problem to be addressed by the 1836 Patent Act was the fact that pre-1836 patent law "offer[ed] an inadequate remedy for the [infringement] injury"). And the Federal Circuit has recognized that enhanced damages may be necessary in appropriate cases to properly compensate a patent owner. *See, e.g., King Instruments Corp. v. Perego*, 65 F.3d 941, 951 n. 6 (Fed. Cir. 1995) ("Such discretionary increases may be appropriate where plaintiffs cannot prove direct and foreseeable damages in the form of lost profits."); *Rite-Hite Corp. v. Kelley Co.*, 819 F.2d 1120, 1126 (Fed. Cir. 1987) ("Whether or not willfulness is found, the court has authority to consider the degree of culpability of the tortfeasor. The measure of damages...provides an opportunity for the trial court to balance equitable concerns as it determines whether and how to recompense the successful litigant."); *Stickle v. Heublein*, 716 F.2d 1550, 1563 (Fed. Cir. 1983) ("[T]he trial court may award an amount of damages greater than a reasonable royalty so that the award is adequate to compensate for the infringement."); *Apple Inc. v. Motorola, Inc.*, 757 F.3d 1286, 1342 (Fed. Cir. 2014) (Prost, J., concurring) ("[W]e have previously acknowledged that a trial court may award an amount of damages *greater than* a reasonable royalty if necessary to compensate for the infringement.") (internal citation omitted) (emphasis in original).

As emphasized by Judge Gajarsa's *Seagate* concurrence, "actual damages provable at law—though not 'inadequate' in the equitable sense—could

nevertheless be less than sufficient to compensate the patentee. In such a case, a discretionary enhancement of damages would be appropriate for entirely remedial reasons, irrespective of the defendant's state of mind." *Seagate*, 497 F.3d at 1378 (Gajarsa, J., concurring). Flexibility in awarding enhanced damages is necessary because the facts of each case vary, and courts should have discretion to award enhanced damages when appropriate under the particular facts of the case. Judge Garjarsa explained that situations in which an award of enhanced damages may be necessary to adequately compensate a patent owner, irrespective of a willfulness finding, could include, for example, those where a defendant's sales data is lost prior to discovery or where a court determines that enhanced damages are more appropriate than injunctive relief. *Id.*

Another example where an award of enhanced damages may be appropriate without a finding of willfulness is in cases involving standard-essential patents. When a patent is declared essential to an industry standard, the patent owner is often obligated to license the patent on fair, reasonable, and non-discriminatory ("FRAND") terms. When a patent owner has expressed a willingness to license its patent on FRAND terms, an infringing implementer may believe that the patent owner has limited its available remedies for unauthorized use and, as a result, may engage in reverse hold-up or dilatory hold-out tactics in order to reduce any payments, delay making them, or

outright avoid paying for a license. Infringing implementers may be incentivized to engage in dilatory tactics because they believe that any royalties awarded in a patent case would be effectively capped at FRAND rates. The FRAND commitment, therefore, may work to provide an incentive for the infringing implementer to continue infringement without payment of compensation for as long as possible in order to gain all of the benefits of postponed cash outlays or other value transfers. District courts should have the discretion to award enhanced damages under § 284 in these kinds of situations in order to fully compensate patent owners and deter such harmful reverse hold-up and hold-out tactics. *See, e.g. Apple*, 757 F.3d at 1342 (Prost, J., concurring) ("[I]f a trial court believes that an infringer previously engaged in bad faith negotiations, it is entitled to increase the damages to account for any harm to the patentee as a result of that behavior.").

In their responses to the petitions for *certiorari* in the consolidated cases, Zimmer and Pulse Electronics place a lot of emphasis on the historical practice of awarding enhanced damages upon a finding of willfulness. (Zimmer Response at 16-18; Pulse Electronics' Brief in Opposition to Petition for a Writ of *Certiorari* ("Pulse Response") at 19). However, this historical practice does not justify a general rule requiring willfulness as a prerequisite for such awards. *Cf. eBay Inc. v. MercExchange, L.L.C.*, 547 U.S. 388, 395 (2006) (observing that the historical practice of granting injunctions in the vast

majority of patent cases "does not *entitle* a patentee to a permanent injunction or justify a *general rule* that such injunctions should issue"). Because willful infringement was the most common reason for a court to award enhanced damages, the case law quickly began to focus on that issue to the exclusion of other circumstances that may have warranted exercise of the district court's discretion.

The Federal Circuit's grafting of a willfulness requirement onto § 284 is contrary to the statute's legislative history, ignores the compensatory aspect of enhanced damages, and improperly eliminates the discretion granted to the district court. This Court should therefore remove the willfulness requirement from the standard for awarding enhanced damages and institute a more discretionary approach.

II. THE FEDERAL CIRCUIT'S OVERLY RIGID TEST IS INAPPROPRIATE EVEN WHEN WILLFULNESS IS AT ISSUE

Although willfulness should not be a necessary predicate to an award of enhanced damages, evidence of willful infringement could certainly be sufficient to support such an award. But even when willfulness is at issue, the Federal Circuit's overly rigid two-part test for determining whether willful infringement has occurred should be rejected. Under the first prong of the current test, a patent owner "must show by clear and convincing evidence that the infringer acted despite an objectively high likelihood that its actions constituted infringement of a valid patent." *Id.* at 1371. If this threshold objective

standard is satisfied, the patent owner must then prove that the objectively-defined risk "was either known or so obvious that it should have been known to the accused infringer." *Id.* This test improperly shifts the focus of the inquiry to an infringer's post-suit activities and fails to account for pre-suit conduct that may warrant an award of enhanced damages in appropriate situations. Section 284 is not so limited. This Court should remove this test and replace it with a standard that allows the district court to consider the totality of the circumstances, including an infringer's pre-suit activities.

A. This Court's Rejection of the Federal Circuit's Unduly Rigid Test for Fee-Shifting Under § 285 Favors Rejection of the Federal Circuit's Equally Rigid Test Under § 284

This Court recently rejected the Federal Circuit's overly rigid test for awarding attorney fees under § 285 of the Patent Act. As discussed below, the reasoning applied by the Court under § 285 applies with equal force to § 284.

Section 285 states that "[t]he court in exceptional cases may award reasonable attorney fees to the prevailing party." 35 U.S.C. § 285. The Federal Circuit previously required a showing that a case either involved "material inappropriate conduct" or was both "objectively baseless" and "brought in subjective bad faith" in order to award attorney fees. *Brooks Furniture Mfg., Inc. v. Dutailier Int'l, Inc.*,

393 F.3d 1378, 1382 (Fed. Cir. 2005). This Court struck down that test as "unduly rigid," finding that the test "impermissibly encumber[ed] the statutory grant of discretion to district courts." *Octane Fitness, LLC v. ICON Health & Fitness, Inc.*, 134 S. Ct. 1749, 1756 (2014). The Court also noted that the Federal Circuit's requirement that "a district court must determine *both* that the litigation is objectively baseless *and* that the plaintiff brought it in subjective bad faith" was too restrictive. *Id.* at 1757. The Court held instead that either objectively baseless litigation or a plaintiff's subjective bad faith may independently warrant a fee award. *Id.* The Court held that the proper test for determining whether fee-shifting is appropriate is the consideration of the totality of the circumstances on a case-by-case basis. *Id.* at 1756. Thus, even though § 285 is limited to "exceptional cases," the Court left the determination of whether fee-shifting is appropriate to the discretion of the district court by allowing the district court to consider the totality of the circumstances.

Zimmer and Pulse Electronics argue that *Octane Fitness* should not influence this Court's decision regarding the enhanced damages standard because there is no mention in *Octane Fitness* of § 284. (Zimmer Response at 19; Pulse Response at 15). For multiple reasons, this Court's reasoning in *Octane Fitness* applies with equal, or even greater, force to awards of increased damages under § 284. First, the Federal Circuit's current test for enhanced damages, like its old test for fee-shifting, was

predicated on this Court's decision in *Professional Real Estate Investors, Inc. v. Columbia Pictures Industries, Inc.*, 508 U.S. 49 (1993) (*PRE*). *See Halo Elecs., Inc. v. Pulse Elecs., Inc.*, 769 F.3d 1371, 1384 (Fed. Cir. 2014) (O'Malley, J., concurring). In *PRE*, this Court established a two-part objective/subjective test to determine whether litigation is "sham" litigation, so as to nullify the immunity from antitrust liability generally enjoyed by litigants. 508 U.S. at 60-61. Prior to this Court's decision in *Octane Fitness*, the Federal Circuit had imported the standard set forth in *PRE* into § 285 as well. *See Octane Fitness*, 134 S. Ct. at 1756. In *Octane Fitness*, this Court held that the Federal Circuit's interpretation of *PRE* was wrong, noting that "the *PRE* standard finds no roots in the text of § 285." *Id.* at 1756-57. This Court should similarly reject the Federal Circuit's reliance on *PRE* to construct an overly rigid test for awarding enhanced damages under § 284. "Just as 'the *PRE* standard finds no roots in the text of § 285,' there is nothing in the text of § 284 that justifies the use of the *PRE* narrow standard." *Halo Elecs.*, 769 F.3d at 1384 (O'Malley, J., concurring) (quoting *Octane Fitness*, 134 S. Ct. at 1757).

Second, Section 284 provides even greater discretion to the district court than does Section 285: a district court "may increase the damages up to three times the amount found or assessed." 35 U.S.C. § 284. There is no requirement that enhanced damages be awarded only in "exceptional cases," as there is for an award of attorney fees under § 285.

See id. Like the test for § 285 rejected by this Court, the current Federal Circuit test for § 284 "superimposes an inflexible framework onto statutory text that is inherently flexible." *Octane Fitness*, 134 S. Ct. at 1756.

Third, the objective/subjective test used by the Federal Circuit to determine whether to award enhanced damages is nearly identical to the § 285 test rejected by this Court in *Octane Fitness*, despite that section having a more restrictive "exceptional case" requirement. *See iLOR, LLC v. Google, Inc.*, 631 F.3d 1372, 1377 (Fed. Cir. 2011) ("The objective baselessness standard for enhanced damages and attorney fees...under *Brooks Furniture* is identical to the objective recklessness standard for enhanced damages and attorney fees against an accused infringer for § 284 willful infringement actions."). This Court should overturn the § 284 test for the same reasons it rejected the § 285 test because, "[i]f 'objective recklessness' is a harsh standard for attorney fees, then it is a necessary conclusion that it is too harsh a standard for enhanced damages." James Ryan, *A Short History of Patent Remedies*, 6 CYBARIS AN INTELL. PROP. L. REV. 150, 182-83 (2015).

Finally, courts have historically treated the award of enhanced damages under § 284 and the award of attorney fees under § 285 similarly, often citing precedent concerning one section in the application of the other. *See, e.g., iLOR*, 631 F.3d at 1377; *Bard Peripheral Vascular, Inc. v. W.L. Gore & Assocs., Inc.*, 682 F.3d 1003, 1007 (Fed. Cir. 2012). It therefore follows logically that this Court should

apply its reasoning in *Octane Fitness* to the standard for awarding enhanced damages under § 284.

In arguing that *Octane Fitness* should not apply to the § 284 standard, Zimmer and Pulse Electronics assert that § 285 is compensatory, while § 284 is punitive. (Zimmer Response at 19; Pulse Response at 14). As discussed above, however, although one purpose of § 284 may be to punish infringers in appropriate cases, awarding enhanced damages has historically also had a compensatory purpose in certain cases. *See supra* Sec. I.B. It is clear that, contrary to Zimmer and Pulse Electronics' assertions, §§ 284 and 285, and the tests used by the Federal Circuit to apply them, are very similar and should be given the same treatment by this Court.

Despite the similarities between § 284 and § 285 and the tests constructed by the Federal Circuit to apply those statutes, the Federal Circuit has to date persisted in applying an overly rigid standard to § 284, even after this Court rejected the basis for that standard in *Octane Fitness*. This Court should reconcile these tests and preserve flexibility and discretion in awarding damages under § 284 as the Court has done for § 285.

B. The Federal Circuit's Willfulness Test Encourages Free-Riding by Infringers and Discourages Innovation

When applying the Federal Circuit's current strict two-part willfulness test, courts have mainly focused on the merits of a defendant's post-litigation

defenses, rather than on a defendant's pre-suit actions. *See, e.g., Halo Elecs.*, 769 F.3d at 1382-83. District courts have increasingly held that a close call on infringement or the existence of a substantial invalidity defense precludes a finding of willfulness. *See, e.g., Resqnet.com, Inc. v. Lansa, Inc.*, 533 F. Supp. 2d 397, 420 (S.D.N.Y. 2008); *TGIP, Inc. v. AT&T Corp.*, 527 F. Supp. 2d 561, 579 (E.D. Tex. 2007).

Under the Federal Circuit's willfulness standard, no matter how unreasonable, reckless, or intentional an infringer's actions are pre-suit, willful infringers can attempt to avoid the consequences of their actions by simply putting forth a non-frivolous post-suit defense. This does not make sense from a policy perspective. Courts should focus on the totality of the circumstances, including pre-suit factors, such as the facts known to the accused infringer at the time the accused infringer learned of the patent and proceeded with actions relevant to infringement. For example, if a party during negotiations is put on notice that it is infringing a number of patents necessary to practice a particular standard and that party then engages in a pattern of hold-out and other delay tactics designed to permit continued infringement and free-riding, such conduct should properly be considered in a willfulness determination. Only by looking at all of the relevant evidence can the trier of fact decide whether the accused infringer committed willful infringement. As the Federal Circuit previously recognized, the mere fact that an infringer is able to come up with some

plausible defenses at trial should not negate the infringer's earlier unreasonable, bad faith, or reckless actions. *See Datascape Corp. v. SMEC, Inc.*, 879 F.2d 820, 829 n. 8 (Fed. Cir. 1989) ("[Defendants] will not be permitted to be saved from their flagrant disregard for the patent laws by the fortuity that when the patent in issue was closely scrutinized in this lawsuit, a close question of obviousness was presented.") (internal citation omitted).

Awarding enhanced damages for willful infringement punishes culpable behavior and deters potential infringers from engaging in such behavior. *See Rite-Hite*, 819 F.2d at 1126 ("The role of a finding of 'willfulness' in the law of infringement is partly as...an economic deterrent to the tort of infringement – and partly as a basis for making economically whole one who has been wronged."). The Federal Circuit's current rigid willfulness standard fails to accomplish these important objectives. Under the current standard, even an infringer who intentionally chose to infringe a patent, believing fully that the act was infringement, and that was later judged to be infringing, could still successfully avoid enhanced damages by concocting, post-suit, a non-frivolous (but ultimately incorrect) defense. This result encourages infringers to disregard known patent rights of innovators because there is little chance that doing so will result in greater penalty. With a lower threat of being punished, efficient infringement becomes a rational business model, and companies may choose to take the lower risk of willfully infringing a patent to obtain the benefit of

free-riding on others' innovation. The willfulness inquiry as a factor in an enhanced damages analysis serves to deter unreasonable behavior, such as knowing infringement and holding out, and the determination of whether enhanced damages are appropriate should enable that goal to be fulfilled. The Federal Circuit's overly rigid test does not do so.

The current willfulness standard is equally problematic with regard to standard-essential patents, such as patents essential to cellular telecommunications standards. After a patent is declared essential to an industry standard, if a company decides to implement the standard and is on notice of another's essential patent, that implementer should take steps to either timely obtain a license and pay appropriate royalties or take all necessary steps to reasonably determine that a license is not needed. However, as discussed above, the implementer has little incentive to timely enter into a license and begin making appropriate payments if it believes that it will at most have to pay FRAND terms for such a license at the end of the day, even if it engages in unreasonable conduct in negotiations, such as reverse hold-up or hold-out tactics to avoid paying appropriate compensation. If the implementer chooses to ignore the patent rights of others and refuses to timely enter into a license, it is free-riding on the intellectual property rights of others. The availability of enhanced damages may provide a needed deterrent against such reverse hold-up and hold-out tactics, and resulting free-riding, because the infringing implementer could face

much higher damages awards in appropriate cases where its conduct so warrants. *See Apple*, 757 F.3d at 1342 (Prost, J., concurring). The Federal Circuit's rigid test, however, removes much of the teeth from this deterrent, and, as a result, users of essential patented technology are incentivized to continue holding out and free-riding as long as possible because, under the current regime, the risk of enhanced damages is mitigated by the possibility that post-suit rationalizations will avoid enhanced damages. Without a meaningful deterrent, there is little risk in this approach and much to gain from continued use of technology without paying for it. *See* Justin P. Huddleson, *Objectively Reckless: A Semi-Empirical Evaluation of In re Seagate*, 15 B.U.J. SCI. & TECH. L. 102, 134 (2009) ("[I]t is likely that companies will be more willing to infringe a patent, preferring to take their chances that the court will strike down the patent or that the benefits of marketing the pirated invention during the duration of the lawsuit will be worth more than damages. With a lower threat of being punished, combined with inaccurate royalty or lost profit determinations, efficient infringement becomes a rational business model.") (internal quotations omitted).

The Federal Circuit's overly rigid test also discourages patent owners from investing in new innovations. If patent owners are unlikely to get enhanced damages in appropriate cases, including those involving willful infringement, some patent owners may choose not to pursue every violation.

Additionally, the increased costs of proving willfulness, combined with the potential for insufficient compensation, greatly decreases incentives for patenting, thus discouraging continued investment in innovation.

The incentive for an inventor to patent and disclose an invention is only as strong as the property rights of a patent. "The strength of this property right is crucial to foster innovation that would not occur except for the prospect of a patent because companies can expect increased profits from investments in research and development." Huddleson, *supra*. The ability to deter unreasonable behaviors, including willful infringement, is part of a patent's value. The current willfulness standard set forth in *Seagate* weakens the property rights of a patent by effectively permitting, perhaps even encouraging, willful infringement. This Court should thus set forth a more flexible, discretionary willfulness standard that is consistent with the discretion afforded by § 284.

III. THE FEDERAL CIRCUIT IMPROPERLY REQUIRES PATENT OWNERS TO ESTABLISH THEIR ENTITLEMENT TO ENHANCED DAMAGES BY CLEAR AND CONVINCING EVIDENCE

A. The High Standard of Proof Creates an Unreasonable Burden for a Patent Owner to Obtain Enhanced Damages

The Federal Circuit's overly rigid test also applies an inappropriate burden of proof by requiring that willfulness be established by clear and convincing evidence. *See Seagate*, 497 F.3d at 1371. The statute contains no such requirement, and the heightened standard imposed by the Federal Circuit undermines the purpose behind it.

When discussing Congress's silence regarding a standard of proof in a statute, this Court has noted that "[t]his silence is inconsistent with the view that Congress intended to require a special, heightened standard of proof." *Grogan v. Garner*, 498 U.S. 279, 286 (1991). Here, Congress's silence in the legislative history and text of § 284 suggests that a court's discretion to increase a damage award should not be constrained by a requirement of proof higher than a preponderance of the evidence.

As this Court has recognized, a "preponderance-of-the-evidence standard allows both parties to share the risk of error in roughly equal fashion," whereas "[a]ny other standard expresses a preference for one side's interests." *Herman &*

MacLean v. Huddleston, 459 U.S. 375, 390 (1983) (internal quotations omitted). The issue of whether to award enhanced damages only arises if the fact-finder has already determined that the defendant has actually infringed a valid and enforceable patent. *See Seagate*, 497 F.3d at 1368. In such cases, the patent owner and the infringer should equally share the risk of an incorrect factual resolution in an enhanced damages determination. Factual issues in an enhanced damages determination should therefore be resolved under a preponderance of the evidence standard.

Finally, it is worth noting that this Court has held that a preponderance of the evidence standard sufficed for recovery under the antitrust laws. *See Herman & McLean*, 459 U.S. at 390. This is significant because a successful antitrust plaintiff automatically recovers treble damages. 15 U.S.C. § 15(a). This demonstrates that heightened burdens of proof are not required for treble damages awards, and there is no reason to impose such a heightened standard on § 284. This Court should clarify the appropriate burden of proof for enhanced damages.

B. This Court's *Octane Fitness* Decision Confirms that a Heightened Standard of Proof Is Not Required to Award Enhanced Damages

In *Octane Fitness*, this Court rejected the Federal Circuit's requirement that patent owners establish their entitlement to fees under § 285 by clear and convincing evidence, noting that "patent-

infringement litigation has always been governed by a preponderance of the evidence standard." *Octane Fitness*, 134 S. Ct. at 1758. The Court noted that "nothing in § 285 demands such a high standard of proof." *Id.* Instead, "Section 285 demands a simple discretionary inquiry." *Id.* Like § 285, § 284 contains no language that justifies a higher standard of proof. Section 284 allows enhanced damages at the discretion of the district court, and the award of such damages should also be subject to the lesser preponderance of the evidence standard governing infringement damages.

Zimmer and Pulse Electronics' argument that *Octane Fitness* should not be applied to § 284 based on the punitive nature of enhanced damages is again without merit in the context of the standard of proof used in enhanced damages analyses. The Supreme Court has expressly rejected the notion that punitive damages require a higher burden of proof, stating that "[t]here has never been any general common-law rule that the threshold for punitive damages must always be higher than that for compensatory liability." *Smith v. Wade*, 461 U.S. 30, 53 (1983). This Court should remove the heightened burden the Federal Circuit has imposed on patent owners to establish enhanced damages under § 284.

IV. ENHANCED DAMAGES DETERMINATIONS SHOULD BE REVIEWED WITH DEFERENCE TO THE FACTFINDER

The Federal Circuit currently engages in *de novo* review of district courts' enhanced damages determinations. *See Bard*, 682 F.3d at 1007. This standard of review is contrary to this Court's precedent and should be corrected.

In *Highmark Inc. v. Allcare Health Management System, Inc.*, this Court held that, because the determination of whether to award attorney fees under § 285 is left to the discretion of the district court, those determinations should be reviewed using an abuse-of-discretion standard. 134 S. Ct. 1744, 1748-49 (2014). The Court emphasized that "the district court is better positioned to decide whether a case is exceptional." *Id.* at 1748 (internal quotations omitted).

As discussed above, § 284 leaves the determination of whether to award enhanced damages to the discretion of district courts. *See supra*, Sec. I. This Court's reasoning in *Highmark* squarely applies to an award of enhanced damages under § 284. As with awards of attorney fees, the district court is better positioned to determine when an award of enhanced damages is appropriate "because it lives with the case over a prolonged period of time." *Highmark*, 134 S. Ct. at 1748. Accordingly, for the same reasons it applied an abuse-of-discretion standard of review to awards of

attorney fees under § 285, this Court should apply the same standard to awards of enhanced damages under § 284.

Zimmer argues that the reasoning set forth in *Highmark* should not alter the standard of review for enhanced damages determinations because *Highmark*'s holding was predicated on the revised standard for awarding attorney fees set forth in *Octane Fitness*. (Zimmer Response at 20-21). As thoroughly argued in this brief, however, the standard for awarding enhanced damages should also be revised by this Court to be more flexible, in line with the revised test for attorney fees set forth in *Octane Fitness*. Once this standard is properly revised, the reasoning set forth in *Highmark* will apply with even greater force to the standard of review for enhanced damages determinations. This Court should therefore require the Federal Circuit to review such determinations using an abuse-of-discretion standard.

CONCLUSION

For the reasons set forth above, the Court should remove the willfulness requirement from the standard for awarding enhanced damages and require a more discretionary approach consistent with the statute. The Court should further hold that the standard of proof for awards of enhanced damages should be a preponderance-of-the-evidence and that such awards should be reviewed only for abuse of discretion.

Respectfully submitted,

JOHN D. HAYNES
Counsel of Record
LINDSEY YEARGIN
ALSTON & BIRD LLP
1201 W. Peachtree St.
Atlanta, GA 30309
Tel. (404) 881-7000
john.haynes@alston.com

Counsel for Amici Curiae

December 16, 2015

Nos. 14-1513, -1520

IN THE

Supreme Court of the United States

HALO ELECTRONICS, INC.,

Petitioner,

v.

PULSE ELECTRONICS, INC. AND
PULSE ELECTRONICS CORPORATION,

Respondents.

STRYKER CORPORATION, STRYKER PUERTO
RICO, LTD., AND STRYKER SALES CORPORATION,

Petitioners,

v.

ZIMMER, INC. AND ZIMMER SURGICAL, INC.,

Respondents.

ON WRITS OF CERTIORARI TO THE UNITED STATES COURT OF APPEALS FOR THE FEDERAL CIRCUIT

BRIEF OF PUBLIC KNOWLEDGE, THE ELECTRONIC FRONTIER FOUNDATION, AND ENGINE ADVOCACY AS *AMICI CURIAE* IN SUPPORT OF NEITHER PARTY

DANIEL NAZER
ELECTRONIC FRONTIER
FOUNDATION
815 Eddy Street
San Francisco, CA 94109
(415) 436-9333
daniel@eff.org

CHARLES DUAN
Counsel of Record
PUBLIC KNOWLEDGE
1818 N Street NW, Suite 410
Washington, DC 20036
(202) 861-0020
cduan@publicknowledge.org

Counsel for amici curiae

Rev. af753ad0

TABLE OF CONTENTS

TABLE OF AUTHORITIES ii
INTEREST OF *AMICI CURIAE* 1
SUMMARY OF ARGUMENT 2
ARGUMENT 5

I. The Regular Use of Patents as Instruments of Threats Against Small Companies Counsels Against Expanding Enhanced Damages 5
   A. History Shows the Devastating Result of Expanding Enhanced Damages 8
   B. A Lower Threshold to Enhanced Damages Would Increase the Threat Value of Abusive Patent Demands 11

II. A Rigorous Bar to Enhanced Damages Is Necessary to Avoid These Public Harms 13
   A. District Court Discretion Should Be Cabined to Avoid Exacerbating an Already Troubling Forum Shopping Situation . . . 13
   B. Enhanced Damages Under Section 284 Should Require a Showing of Subjective Bad Faith 18
   C. Bad Faith Should Not Follow from a Reasonable Belief in Invalidity, Regardless of When the Belief Was Perfected 22

III. Petitioners' Reasons for Expanding Enhanced Damages Are Detached from the Reality of Patent Assertion 28

CONCLUSION 31

TABLE OF AUTHORITIES

CASES

1-800 Contacts, Inc. v. Ditto Technologies, Inc.,
No. 2:13-cv-145 (D. Ut. Apr. 29, 2013) 7

Alice Corp. Pty. Ltd. v. CLS Bank International,
134 S. Ct. 2347 (2014) 2, 23

Blonder-Tongue Laboratories, Inc.
v. University of Illinois Foundation,
402 U.S. 313 (1971) 24

BMW of North America v. Gore,
517 U.S. 559 (1996) 20

Cardinal Chemical Co.
v. Morton International, Inc.,
508 U.S. 83 (1993) 24

Commil USA, LLC v. Cisco Systems, Inc.,
135 S. Ct. 1920 (2015) 6, 23, 25

Deere & Co. v. International Harvester Co.,
658 F.2d 1137 (7th Cir. 1981) 19

eBay Inc. v. MercExchange, LLC,
547 U.S. 388 (2006) 6, 11, 14

Eon-Net LP v. Flagstar Bancorp,
653 F.3d 1314 (Fed. Cir. 2011) 6

Garretson v. Clark,
111 U.S. 120 (1884) 21

Global-Tech Appliances, Inc. v. SEB S.A.,
131 S. Ct. 2060 (2011) 14

Highmark Inc.
v. Allcare Health Management System, Inc.,
134 S. Ct. 1744 (2014) 13

In re Acer America Corp.,
626 F.3d 1252 (Fed. Cir. 2010) 17

In re Apple, Inc.,
581 F. App'x 886 (Fed. Cir. 2014) (per curiam) . . 16

In re Biosearch Technologies, Inc.,
452 F. App'x 986 (Fed. Cir. 2011) 17

In re EchoStar Communications Corp.,
448 F.3d 1294 (Fed. Cir. 2006) 9

In re EMC Corp.,
677 F.3d 1351 (Fed. Cir. 2012) 17

In re Genentech, Inc.,
566 F.3d 1338 (Fed. Cir. 2009) 17

In re Google Inc.,
588 F. App'x 988 (Fed. Cir. 2014) 16

In re Google Inc.,
No. 15-138, 2015 WL 5294800 (Fed. Cir. July 16,
2015) 16

In re Hoffmann-La Roche Inc.,
587 F.3d 1333 (Fed. Cir. 2009) 17

In re Microsoft Corp.,
630 F.3d 1361 (Fed. Cir. 2011) 17

In re Morgan Stanley,
417 F. App'x 947 (Fed. Cir. 2011) (per curiam) . . 17

In re MPHJ Technology Investments, LLC,
159 F.T.C. 1004 (Mar. 13, 2015) 26–27

In re Nintendo Co.,
544 F. App'x 934 (Fed. Cir. 2013) 16

In re Nintendo Co.,
589 F.3d 1194 (Fed. Cir. 2009) 17

In re Nintendo of America, Inc.,
756 F.3d 1363 (Fed. Cir. 2014) 16

In re Oracle Corp.,
399 F. App'x 587 (Fed. Cir. 2010) 17

In re Seagate Technology, LLC,
497 F.3d 1360 (Fed. Cir. 2007) 10–11, 28

In re TC Heartland, LLC,
No. 16-105 (Fed. Cir. Oct. 29, 2015) 14

In re Toa Techs, Inc.,
543 F. App'x 1006 (Fed. Cir. 2013) 16

In re Toyota Motor Corp.,
747 F.3d 1338 (Fed. Cir. 2014) 16

In re TS Tech USA Corp.,
551 F.3d 1315 (Fed. Cir. 2008) 17

In re Verizon Business Network Services Inc.,
635 F.3d 559 (Fed. Cir. 2011) 17

In re Zimmer Holdings, Inc.,
609 F.3d 1378 (Fed. Cir. 2010) 17

Kewanee Oil Co. v. Bicron Corp.,
416 U.S. 470 (1974) 10

Knorr-Bremse Systeme fuer Nutzfahrzeuge GmbH v. Dana Corp.,
383 F.3d 1337 (Fed. Cir. 2004) 10, 30

Lear, Inc. v. Adkins,
395 U.S. 653 (1969) 24–25

Lipton v. Nature Co.,
71 F.3d 464 (2d Cir. 1995) 20

McGuire v. The Golden Gate,
16 F. Cas. 141 (C.C.N.D. Cal. 1856) 20

Medtronic, Inc. v. Mirowski Family Ventures, LLC,
134 S. Ct. 843 (2014) 24

Microsoft Corp. v. i4i Ltd. Partnership,
131 S. Ct. 2238 (2011) 25

Nautilus, Inc. v. Biosig Instruments, Inc.,
134 S. Ct. 2120 (2014) 2, 25

Octane Fitness, LLC v. Icon Health & Fitness, Inc.,
134 S. Ct. 1749 (2014) 2, 28

Pacific Mutual Life Insurance Co. v. Haslip,
499 U.S. 1 (1999) 19

Precision Instrument Manufacturing Co. v. Automotive Maintenance Machinery Co.,
324 U.S. 806 (1945) 24

Red Wing Shoe Co. v. Hockerson-Halberstadt, Inc.,
148 F.3d 1355 (Fed. Cir. 1988) 14

Schering Corp. v. Geneva Pharmaceuticals, Inc.,
339 F.3d 1373 (Fed. Cir. 2003) 27

Seymour v. McCormick,
57 U.S. 480 (1854) 8, 18–19

Silkwood v. Kerr-McGee Corp.,
464 U.S. 238 (1984) 19

State Farm Mutual Automobile Insurance Co. v. Campbell,
538 U.S. 408 (2003) 20

Underwater Devices Inc. v. Morrison-Knudsen Co.,
717 F.2d 1380 (Fed. Cir. 1983) 8–12, 26–27, 30

Union Carbide Corp. v. Graver Tank & Manufacturing Co.,
282 F.2d 653 (7th Cir. 1960) 8, 19

VE Holding Corp. v. Johnson Gas Appliance Co.,
917 F.2d 1574 (Fed. Cir. 1990) 14

VirnetX, Inc. v. Cisco Systems, Inc.,
767 F.3d 1308 (Fed. Cir. 2014) 21

Wilkes v. Wood,
98 Eng. Rep. 489 (C.P. 1763) 19

STATUTES

17 U.S.C. § 504(c)(2) 20

28 U.S.C. § 1404 16

35 U.S.C. § 102(a)(1) 27

35 U.S.C. § 271(e)(2)(A) 29

——— § 282(a) 23, 25

——— § 284 . . . . 3–5, 7, 12–13, 17–22, 25, 28–29, 31

——— § 285 28

Federal Food, Drug, and Cosmetic Act § 505(j)(2)(A)(iv), 21 U.S.C. § 355 (2012) 29

Restatement (Second) of Torts § 908(2) (1977) 20

OTHER SOURCES

J. Jonas Anderson, *Court Competition for Patent Cases*, 163 U. Pa. L. Rev. 631 (2015) 16

Michelle Armond, *Introducing the Defense of Independent Invention to Motions for Preliminary Injunctions in Patent Infringement Lawsuits*, 91 Cal. L. Rev. 117 (2003) 21

Megan M. La Belle, *Patent Litigation, Personal Jurisdiction, and the Public Good*, 18 Geo. Mason L. Rev. 43 (2010) 14

James Bessen & Michael J. Meurer, Essay, *The Direct Costs from NPE Disputes*, 99 Cornell L. Rev. 387 (2014) 7

James Bessen & Michael J. Meurer, *Patent Failure* (2008) 6

Brief of Amici Curiae Electronic Frontier Foundation, Public Knowledge, and Engine Advocacy in Support of Petitioner, *In re TC Heartland, LLC*, No. 16-105 (Fed. Cir. Oct. 29, 2015) 14

Colleeen V. Chien, *Of Trolls, Davids, Goliaths, and Kings: Narratives and Evidence in the Litigation of High-Tech Patents*, 87 N.C. L. Rev. 1571 (2009) . . . 6

Colleen Chien, *Startups and Patent Trolls*, 17 Stan. Tech. L. Rev. 461 (2014), *available at* http://stlr.stanford.edu/pdf/startupsandpatenttrolls.pdf 7

Colleen V. Chien, New Am. Found., *Patent Assertion and Startup Innovation* (2013), http://ssrn.com/abstract=2321340 12

Christopher A. Cotropia & Mark A. Lemley, *Copying in Patent Law*, 87 N.C. L. Rev. 1421 (2009) . . . 29

Defendant Ditto Technologies, Inc.'s Motion to Dismiss, *1-800 Contacts, Inc. v. Ditto Techs., Inc.*, No. 2:13-cv-145 (D. Ut. Apr. 29, 2013) 7

Lydia Dishman, *Site to Be Seen: Ditto.com*, N.Y. Times Style Mag. (Oct. 12, 2012), http://tmagazine.blogs.nytimes.com/2012/10/12/site-to-be-seen-ditto-com/ 6

Fed. Trade Comm'n, *To Promote Innovation: The Proper Balance of Competition and Patent Law and Policy* (2003), *available at* http://www.ftc.gov/sites/default/files/documents/reports/promote-innovation-proper-balance-competition-and-patent-law-and-policy/innovationrpt.pdf 10

Jeanne C. Fromer, *Patent Disclosure*, 94 Iowa L. Rev. 539 (2009) 10

Tomio Geron, *Y Combinator's Paul Graham On The $150K Per Start-Up Offer*, Wall St. J. (Feb. 1, 2011), http://blogs.wsj.com/venturecapital/2011/02/01/y-combinators-paul-graham-on-the-150k-per-start-up-offer/ 12

Paul R. Gugliuzza, *Patent Trolls and Preemption*, 101 Va. L. Rev. 1579 (2015) 6

Brian C. Howard, *2015 First Half Patent Case Filing Trends*, Lex Machina (July 14, 2015), https://lexmachina.com/2015-first-half-patent-case-filing-trends/ 15

Daniel Klerman & Greg Reilly, *Forum Selling*, 2015 S. Cal. L. Rev. (forthcoming), http://ssrn.com/abstract=2538857 . . . . . 15–16, 18

Lionel M. Lavenue et al., *New E.D. Tex. Procedural Hurdle for Early Alice-Based Dispositive Motions*, Finnegan (Sept. 25, 2015), http://www.finnegan.com/resources/articles/articlesdetail.aspx?news=ca27900f-01e9-45f4-a14e-df31d0d66c69 16

Mark A. Lemley, *Should Patent Infringement Require Proof of Copying?*, 105 Mich. L. Rev. 1525 (2007) 21

Mark A. Lemley & Carl Shapiro, *Probabilistic Patents*, 19 J. Econ. Persp. 75 (2005) 23

Mark A. Lemley & Ragesh K. Tangri, *Ending Patent Law's Willfulness Game*, 18 Berkeley Tech. L.J. 1085 (2003) 9–10

Yan Leychkis, *Of Fire Ants and Claim Construction: An Empirical Study of the Meteoric Rise of the Eastern District of Texas as a Preeminent Forum for Patent Litigation*, 9 Yale J.L. & Tech. 193 (2007) 15

Mark Liang & Brian Berliner, *Fee Shifting in Patent Litigation*, 18 Va. J.L. & Tech. 59 (2013) . . . 28

Brian J. Love & Shawn Ambwani, Inter Partes *Review: An Early Look at the Numbers*, 81 U. Chi. L. Rev. Dialogue 93 (2014) 23

Ingrid Lunden, *Ditto Picks Up $3 Million from August Capital, Others for Its Virtual, 3D Eyeglasses Sales Site*, TechCrunch (Apr. 26, 2012), http://techcrunch.com/2012/04/26/ditto-picks-up-3-million-from-august-capital-others-for-its-virtual-3d-eyeglasses-sales-site/ 6

Shawn P. Miller, *Where's the Innovation: An Analysis of the Quantity and Qualities of Anticipated and Obvious Patents*, 18 Va. J.L. & Tech. 1 (2013) . 23

Kimberly A. Moore, *Forum Shopping in Patent Cases: Does Geographic Choice Affect Innovation?*, 79 N.C. L. Rev. 889 (2001) 15

David G. Owen, *A Punitive Damages Overview*, 39 Vill. L. Rev. 363 (1994) 20

John J. Pavlak, *The Increasing Risk of Willful Patent Infringement*, 65 J. Pat. Off. Soc'y 603 (1983) . . 8

Matthew D. Powers & Steven C. Carlson, *The Evolution and Impact of the Doctrine of Willful Patent Infringement*, 51 Syracuse L. Rev. 53 (2001) . . . 8–9, 26

Christopher B. Seaman, *Willful Patent Infringement and Enhanced Damages After* In Re Seagate*: An Empirical Study*, 97 Iowa L. Rev. 417 (2012) 9, 17, 28

Section of Antitrust Law, Am. Bar Ass'n, *Punitive Damages and Business Torts* (Thomas J. Collin ed., 1998) 19

Carl Shapiro, *Prior User Rights*, 96 Am. Econ. Rev. 92 (2006) 21

Alexander E. Silverman, *Intellectual Property Law and the Venture Capital Process*, 5 Berkeley Tech. L.J. 157 (1990) 9

Edwin H. Taylor & Glenn E. Von Tersch, *A Proposal to Shore Up the Foundations of Patent Law That the* Underwater *Line Eroded*, 20 Hastings Comm. & Ent. L.J. 721 (1998) 9

Jasper L. Tran, *Software Patents: A One-Year Review of* Alice v. CLS Bank, 97 J. Pat. & Trademark Off. Soc'y 532 (2015) 23

Transcript of Oral Argument, *eBay Inc. v. MercExchange, LLC*, 547 U.S. 388 (Mar. 29, 2006) (No. 05-130) 14

Transcript of Oral Argument, *Commil USA, LLC v. Cisco Sys., Inc.*, 135 S. Ct. 1920 (Mar. 31, 2015) (No. 13-896) 23

TXED Rejects 73% of 35 USC § 101 Pretrial Challenges in 2015, DocketNavigator DocketReport (Aug. 10, 2015), http://docketreport.blogspot.com/2015/08/txed-rejects-73-of-35-usc-101-pretrial.html 23

U.S. Gov't Accountability Office, *GAO-13-465, Intellectual Property: Assessing Factors that Affect Patent Infringement Litigation Could Help Improve Patent Quality* (2013), *available at* http://www.gao.gov/assets/660/657103.pdf 6, 15

Fred Wilson, *Burn Rates: How Much?*, AVC (Dec. 12, 2011), http://avc.com/2011/12/burn-rates-how-much/ 12

INTEREST OF *AMICI CURIAE*

Public Knowledge[1] is a non-profit organization that is dedicated to preserving the openness of the Internet and the public's access to knowledge, promoting creativity through balanced intellectual property rights, and upholding and protecting the rights of consumers to use innovative technology lawfully. Public Knowledge advocates on behalf of the public interest for a balanced patent system, particularly with respect to new and emerging technologies.

The Electronic Frontier Foundation ("EFF") is a non-profit civil liberties organization that has worked for over 25 years to protect consumer interests, innovation, and free expression in the digital world. EFF and its more than 22,000 dues-paying members have a strong interest in helping the courts ensure that intellectual property law serves the public interest.

Engine Advocacy has worked with the White House, Congress, federal agencies, and state and local governments to discuss policy issues, write legislation, and introduce the tech community to Washington insiders. Engine Advocacy conducts research, organizes events, and spearheads campaigns to educate elected officials, the entrepreneur community and the general public on issues vital to fostering technological innovation.

---

[1]Pursuant to Supreme Court Rule 37.3(a), the *Stryker* parties have consented to the filing of this brief; the *Halo* parties have granted blanket consent for all briefs. Pursuant to Rule 37.6, no counsel for a party authored this brief in whole or in part, and no counsel or party made a monetary contribution intended to fund the preparation or submission of the brief. No person or entity, other than *amici*, their members, or their counsel, made a monetary contribution to the preparation or submission of this brief.

Public Knowledge, the Electronic Frontier Foundation, and Engine Advocacy have previously served as *amici* in key intellectual property cases. *E.g.*, *Alice Corp. Pty. Ltd. v. CLS Bank Int'l*, 134 S. Ct. 2347 (2014); *Nautilus, Inc. v. Biosig Instruments, Inc.*, 134 S. Ct. 2120 (2014); *Octane Fitness, LLC v. Icon Health & Fitness, Inc.*, 134 S. Ct. 1749 (2014).

SUMMARY OF ARGUMENT

Kate Doerksen had an idea. Just out of business school, she wanted to build a virtual reality system for trying on glasses. She raised funds, hired software developers, and launched a service in April 2012 to great success. The *New York Times Style Magazine* praised the concept; investors backed it with $3 million in captial.

Only ten months later, Doerksen found herself the defendant against a patent bought by a competitor apparently for the specific purpose of obstructing her business. She laid off employees, delayed product development, and almost sold the company far under value. The threat of already strong patent remedies coupled with the looming prospect of protracted litigation nearly deprived her of her business, and nearly deprived the world of a useful and innovative service.

As this Court contemplates the appropriate role of enhanced damages in patent infringement lawsuits, it should bear in mind situations like that of Kate Doerksen, which are unfortunately all too common. The patent system is filled with those who use patents not as a shield of protection but rather as a sword to threaten operating businesses. Some, like that in Doerksen's case, are competitors seeking to cement their market dominance; others exist "primarily for obtaining licensing fees," as Jus-

tice Kennedy has observed. In either situation, the effect on targeted businesses is the same: the prospect of high litigation costs and damages can force smaller targets of such demands to acquiesce or, worse, close up shop.

To remove key limitations on the availability of enhanced damages under § 284, as Petitioners seek, would only worsen those prospects of insurmountable costs and increase the abusive and unnecessary pressure placed on those small companies. Indeed, between 1983 and 2007, the Federal Circuit *did* remove some of those limitations on § 284. This resulted in a state of the law widely considered to be disastrous. All to deal with an uncertain possibility of treble damages, companies in that period were forced to obtain expensive opinion letters, to waive attorney-client privilege during litigation, and even to avoid reading patents to gain knowledge. This is not an episode of history that this Court should want to repeat.

Amici do not take a position on the correct interpretation of § 284, but do believe that any proper construction should limit enhanced damages in at least the following three ways: district court discretion should not be left unbounded, subjective bad faith should be required, and a reasonable belief in invalidity should avoid a finding of bad faith.

First, this Court should avoid giving district courts wholesale discretion over awards of enhanced damages, to avoid exacerbating a longstanding problem of forum shopping in patent cases. Patentees enjoy nearly unconstrained control over the forum of infringement suits, and they clearly prefer one federal district, the Eastern District of Texas. The concentration of suits in one forum is concerning in itself, and even more concerning is the possibility that the district's rules and practices skew to-

ward patentees. Unbridled discretion over enhancement of damages would only widen the incentives toward this unproductive forum shopping behavior.

Second, any standard for enhanced damages should at least require a showing of the infringer's subjective bad faith. Treble damages are punitive, not compensatory. In wide-ranging areas of the law, this Court and others have stated that punitive damages must be attributable to culpable conduct. Imputing at least a subjective bad faith requirement to § 284 would make patent law consistent with other areas and, more importantly, would help to protect small companies from abusive threats.

Third, if a party has a good faith, reasonable belief that a patent is invalid, then courts should not impute bad faith upon such a party to the point of warranting enhanced damages. Given the prevalence of invalid patents, it would be inefficient and unfair to demand that a company avoid infringing any patent it encounters under penalty of treble damages, no matter how facially invalid that patent may be. Furthermore, this Court has long recognized the public need to encourage challenges to patent validity. To permit for increased, punitive damages against one who raises a serious challenge to patent validity would greatly discourage parties from mounting such challenges.

To make their case for expanding enhanced damages, Petitioners and *amici* supporting them describe a world of intentional copyists who steal patentees' ideas. But that is not the world of today. Examples of intentional copying are incredibly rare, even among litigated cases; these are not the paradigms this Court should be looking for to develop a general interpretation of § 284.

Instead, this Court should focus on the predominant situation: a company—often a small one, often an innovative one—blindsided by an unexpected infringement allegation, a questionable patent, and a demand for settlement in the shadow of an increasingly expensive litigation system. There is already little respite for such a company. Section 284 should not make it worse.

ARGUMENT

Without taking a position as to whether the particular Federal Circuit rule is correct, *amici* are concerned that the bar to obtaining enhanced patent damages under 35 U.S.C. § 284 remain sufficiently high and certain, for at least the following reasons.

I. THE REGULAR USE OF PATENTS AS INSTRUMENTS OF THREATS AGAINST SMALL COMPANIES COUNSELS AGAINST EXPANDING ENHANCED DAMAGES

In considering Petitioners' bid for increased patent remedies in the form of expanded enhanced damages, this Court should consider the effect that such an expansion would have on small companies who are threatened by patent asserters, frequently abusive ones. This situation is unfortunately common, and yet it is largely ignored by Petitioners, whose arguments narrowly focus on in-litigation effects rather than pre-litigation practice.

Today, patents are not used solely for their original purpose as protection for inventors; more often they are asserted as weapons to threaten others, frequently in an abusive manner. Most notable are "patent assertion entities"; as Justice Kennedy described them, an "industry has developed in which firms use patents . . . primarily

for obtaining licensing fees." *eBay Inc. v. MercExchange, LLC*, 547 U.S. 388, 396 (2006) (Kennedy, J., concurring), *quoted in Commil USA, LLC v. Cisco Sys., Inc.*, 135 S. Ct. 1920, 1930 (2015). Many such entities take advantage of overbroad, indefinite patents combined with the high costs of litigation defense in an abusive scheme to force businesses into settlements.[2]

But equally problematic are incumbent companies who seek to use patents to suppress innovative new market entrants, a practice described as "patent predation." Colleeen V. Chien, *Of Trolls, Davids, Goliaths, and Kings: Narratives and Evidence in the Litigation of High-Tech Patents*, 87 N.C. L. Rev. 1571, 1587 (2009). The story of Kate Doerksen's company fits this pattern. Her company, Ditto.com, developed a new and highly praised virtual-reality glasses shopping system.[3] One month later, the $900 million company 1-800-Contacts purchased a patent, initiating an infringement lawsuit

---

[2] *See, e.g.*, *Eon-Net LP v. Flagstar Bancorp*, 653 F.3d 1314, 1327 (Fed. Cir. 2011) (patentee "acted in bad faith by exploiting the high cost to defend complex litigation to extract a nuisance value settlement"); Paul R. Gugliuzza, *Patent Trolls and Preemption*, 101 Va. L. Rev. 1579, 1581 (2015) (describing entities who "assert patents against numerous potential infringers, relying on the high cost of threatened litigation to extract quick settlements"); *see also* U.S. Gov't Accountability Office, *GAO-13-465, Intellectual Property: Assessing Factors that Affect Patent Infringement Litigation Could Help Improve Patent Quality* 28 (2013), *available at* URL *supra* p. xii (noting "unclear and overly broad patents" as a key factor contributing to patent litigation); James Bessen & Michael J. Meurer, *Patent Failure* 164 (2008) ("[T]he deterioration of the notice function might be the central factor fueling the growth in patent litigation").

[3] *See* Lydia Dishman, *Site to Be Seen: Ditto.com*, N.Y. Times Style Mag. (Oct. 12, 2012), URL *supra* p. viii; Ingrid Lunden, *Ditto Picks Up $3 Million from August Capital, Others for Its Virtual, 3D Eyeglasses Sales Site*, TechCrunch (Apr. 26, 2012), URL *supra* p. x.

eight months thereafter. Defendant Ditto Technologies, Inc.'s Motion to Dismiss at 6, *1-800 Contacts, Inc. v. Ditto Techs., Inc.*, No. 2:13-cv-145 (D. Ut. Apr. 29, 2013).

In either case, this dark side of the patent system has real impacts on small companies. While a large company can afford the legal analysis to respond to a patent assertion, smaller ones cannot, and so they are forced to give up business lines, cut employees, or even close shop. *See* Colleen Chien, *Startups and Patent Trolls*, 17 Stan. Tech. L. Rev. 461, 474–75 & fig.1 (2014), *available at* URL *supra* p. viii. Entrepreneurs described receiving a patent demand as a "death knell" for a prefunded company. *See id.* at 474. And these cases are not out of the ordinary, as small companies are favorite targets of patent assertion.[4]

Enhanced damages expanded too far would only enhance these problematic threats to small technology businesses and the public, and so this Court should seek to cabin § 284 to avoid this concern. To make enhanced damages fully discretionary and devoid of sufficient constraints, as Petitioners seek, would allow abusive patent asserters to heighten their demands, leading to unnecessary disincentives to innovation. These unfortunate results are no mere speculation: history shows that they occurred during a brief period when the Court of Appeals for the Federal Circuit erroneously lowered the bar to obtaining enhanced damages. To prevent those same results from recurring today, this Court should take care not to lower the bar again.

---

[4]One survey found that 82% of defendants to patent suits brought by non-practicing entities were companies with revenues of less than $100 million. James Bessen & Michael J. Meurer, Essay, *The Direct Costs from NPE Disputes*, 99 Cornell L. Rev. 387, 398 (2014). Another found that 55% of defendants to patent assertion entities make $10 million or less. Chien, *supra*, at 464.

A. History Shows the Devastating Result of Expanding Enhanced Damages

The history of enhanced damages in patent law instructively reveals the substantial problems caused by lowering the threshold to those enhanced damages. This is because, for a brief period, the Federal Circuit did in fact lower that threshold, causing numerous problems for a 24-year period before the offending decision was corrected.

In *Seymour v. McCormick*, this Court recognized a willfulness requirement in the then-prevailing enhanced damages statute. *See* 57 U.S. 480, 488–89 (1854). This willfulness requirement would remain undisturbed for over a century. *See, e.g., Union Carbide Corp. v. Graver Tank & Mfg. Co.*, 282 F.2d 653, 675 (7th Cir. 1960). *See generally* Matthew D. Powers & Steven C. Carlson, *The Evolution and Impact of the Doctrine of Willful Patent Infringement*, 51 Syracuse L. Rev. 53, 69 & n.95 (2001) (listing cases in accord).

But in 1983, the Court of Appeals for the Federal Circuit changed this general requirement of willfulness. In *Underwater Devices Inc. v. Morrison-Knudsen Co.*, that court held that a potential infringer "has an affirmative duty to exercise due care to determine whether or not he is infringing." 717 F.2d 1380, 1389 (Fed. Cir. 1983). The Court of Appeals indeed went further, stating that such a duty "includes, *inter alia*, the duty to seek and obtain competent legal advice from counsel *before* the initiation of any possible infringing activity." *Id.* at 1390 (emphases in original). This decision "significantly increase[d] the likelihood of a willful infringement finding." John J. Pavlak, *The Increasing Risk of Willful Patent Infringement*, 65 J. Pat. Off. Soc'y 603, 603 (1983).

This change to the doctrine of willfulness immediately caused serious problems. The opinion letters required by *Underwater Devices* could easily cost cost up to $100,000 per patent.[5] Obviously this is a significant cost for even a large business, but for small businesses a $100,000 expense could be business-terminating. "Smaller, start-up companies may not have the internal resources to evaluate patents," commentators wrote. Powers & Carlson, *supra*, at 102. Thus, one practitioner described the *Underwater Devices* doctrine as "bad for start-ups." Alexander E. Silverman, *Intellectual Property Law and the Venture Capital Process*, 5 Berkeley Tech. L.J. 157, 163 (1990).

Furthermore, reliance on such an opinion letter in litigation automatically waived attorney-client privilege. *See In re EchoStar Commc'ns Corp.*, 448 F.3d 1294, 1299 (Fed. Cir. 2006). So companies in litigation were forced into a "Hobson's choice" between waiving attorney-client privilege to reveal the opinion letter on the one hand, and facing an inference of willfulness due to concealing the letter on the other hand. *See* Christopher B. Seaman, *Willful Patent Infringement and Enhanced Damages After* In Re Seagate*: An Empirical Study*, 97 Iowa L. Rev. 417, 427 (2012); Mark A. Lemley & Ragesh K. Tangri, *Ending Patent Law's Willfulness Game*, 18 Berkeley Tech. L.J. 1085, 1099–108 (2003) (noting numerous problems created by such waiver of privilege).

---

[5] *See* Powers & Carlson, *supra*, at 102; Mark A. Lemley & Ragesh K. Tangri, *Ending Patent Law's Willfulness Game*, 18 Berkeley Tech. L.J. 1085, 1092 (2003); Edwin H. Taylor & Glenn E. Von Tersch, *A Proposal to Shore Up the Foundations of Patent Law That the* Underwater *Line Eroded*, 20 Hastings Comm. & Ent. L.J. 721, 740 (1998).

And *Underwater Devices* oddly "create[d] a strong incentive not to read patents." Lemley & Tangri, *supra*, at 1100. This contradicted the intended purpose of patent disclosures as "additions to the general store of knowledge," *Kewanee Oil Co. v. Bicron Corp.*, 416 U.S. 470, 481 (1974), because it dissuaded the public from looking at that store of knowledge. *See* Jeanne C. Fromer, *Patent Disclosure*, 94 Iowa L. Rev. 539, 587–88 (2009).

Such concerns led Federal Circuit Judge Dyk and others to observe that "the imposition of the due care requirement has produced nothing of benefit to the patent system." *Knorr-Bremse Systeme fuer Nutzfahrzeuge GmbH v. Dana Corp.*, 383 F.3d 1337, 1351 (Fed. Cir. 2004) (Dyk, J., concurring and dissenting); *see also* Fed. Trade Comm'n, *To Promote Innovation: The Proper Balance of Competition and Patent Law and Policy* 29 (2003), *available at* URL *supra* p. viii (in *Underwater Devices* era, "the willfulness doctrine drew few defenders").

The ongoing harms and criticisms of the *Underwater Devices* rule led the Court of Appeals to change course and return to the original high bar of willfulness. In *Knorr-Bremse*, the appeals court held that, in claims for enhanced damages, no negative inference should be drawn for failure to obtain an opinion of counsel. *See* 383 F.3d at 1341. This overruled a portion of *Underwater Devices*. *See Knorr-Bremse*, 383 F.3d at 1341.

Underwater Devices was fully overruled by *In re Seagate Technology, LLC*. *See* 497 F.3d 1360, 1371 (Fed. Cir. 2007). The Federal Circuit found that the prior standard both "fails to comport with the general understanding of willfulness in the civil context" and "allows for punitive damages in a manner inconsistent with Supreme Court precedent." *Id.* The appeals court thus reestablished the

original standard for enhanced damages, following parallel copyright law and this Court's related precedents. *See id.* at 1370–71.

The *Underwater Devices* world of expensive opinion letters and fear of reading patents is not one that this Court should seek to revive. Accordingly, this Court should carefully consider whether Petitioners' bid to lower the threshold to enhanced damages would create the kinds of problems seen in that episode of history.

B. A Lower Threshold to Enhanced Damages Would Increase the Threat Value of Abusive Patent Demands

This Court should be cautious in removing limitations on the scope of enhanced damages, because the effect of doing so is not merely to alter the balance of outcomes in fully litigated cases. The more prominent effect is to augment the *ex ante* threat value of patent assertion exploited by patent asserters, particularly abusive ones.

In the parallel context of injunctive relief, this Court has recognized how excessive patent remedies can engender excessive threats. In *eBay*, Justice Kennedy observed that in many cases "the threat of an injunction is employed simply for undue leverage in negotiations." 547 U.S. at 396 (Kennedy, J., concurring). Consequently, this Court saw fit to limit the availability of injunctions. *See id.* at 394 (majority op.).

And Justice Kennedy's general view was made particular in the case of Kate Doerksen. After her competitor launched a patent lawsuit seeking an injunction against her company, Doerksen had to lay off employees and redirect funds away from product marketing toward litigation costs; the process apparently devalued the company

by between $3 and $4 million. *See* Colleen V. Chien, New Am. Found., *Patent Assertion and Startup Innovation* 49 (2013), URL *supra* p. viii. The potential threat of a strong remedy had immediate negative consequences for business and innovation.

Similar to injunctions, overbroad enhanced damages would make abusive patent demands more powerful and thus more problematic in several ways.

For example, Petitioners lament that infringers are being let "off the hook" because they can raise an "after-the-fact defense" to infringement, intimating that this should not be the case. Halo Br. 24; Stryker Br. 49. But the alternate situation that Petitioners seek, where only defenses developed at the time of infringement can count, would give patent demands the excess power they enjoyed under *Underwater Devices*: the power to force parties to seek immediate advice of counsel. Such a situation would force a difficult quandary on small companies lacking the budget for $100,000 opinion letters.[6]

Petitioners also argue that enhanced damages under § 284 may be awarded for compensatory rather than punitive purposes. Stryker Br. 42; *see also* Halo Br. 15. Besides being wrong on the law, *see* Section II.B *infra* p. 18, the possibility of treble damages even absent punishably culpable conduct would intensely magnify patent threats. The thought that a company could owe *more* than its

[6]Those budgets are sometimes indeed very small. The renowned startup incubator Y Combinator originally offered new companies an initial budget of merely $11,000 plus $3,000 per founder. Tomio Geron, *Y Combinator's Paul Graham On The $150K Per Start-Up Offer*, Wall St. J. (Feb. 1, 2011), URL *supra* p. ix. Venture capital investor Fred Wilson recommends a "burn rate" of only $50,000 per month in the initial stages of product development. Fred Wilson, *Burn Rates: How Much?*, AVC (Dec. 12, 2011), URL *supra* p. xii.

own profits even for unwitting conduct would force some to submit to patent asserters' demands, and it would frighten others away from engaging in innovation in the first place.

Petitioners try strenuously to assuage these fears, hypothesizing that their liberal approach to § 284 "will not open a Pandora's box of runaway trebling." Halo Br. 28. But they exclusively focus on enhanced damages at the end stages of litigation; they ignore the *ex ante* effects on patent litigation threats that may never see a courtroom. At that pre-litigation stage, their unconstrained reading of § 284 leads to uncertainty; uncertainty leads to fear; fear leads to discouragement of innovation. A sufficiently rigorous and clearly defined bar to enhanced damages is necessary to avoid this.

II. A Rigorous Bar to Enhanced Damages Is Necessary to Avoid These Public Harms

To avoid these negative consequences, awards of enhanced damages under § 284 should be subject at least to the following minimum requirements.

A. District Court Discretion Should Be Cabined to Avoid Exacerbating an Already Troubling Forum Shopping Situation

This Court should not accept Petitioners' invitation to give district judges full discretion over enhanced damages. The patent system already suffers from a notorious problem of forum shopping, and greater discretion over damage awards would only worsen that problem.[7]

[7]It is certainly the case that many aspects of patent law are left to the discretion of trial judges. *See, e.g., Highmark Inc. v. Allcare*

1. A "renegade" jurisdiction with a "tilt in one direction," as certain Justices have suggested,[8] the Eastern District of Texas has quickly become known as the venue of choice for patent lawsuits. Under current Federal Circuit law,[9] patentees enjoy near-total control over which forum will hear their infringement suits. And patentees consistently flock to that one court: 44% of patent cases filed in the first half of 2015 went to the Eastern District

---

Health Mgmt. Sys., Inc., 134 S. Ct. 1744, 1749 (2014). But that need not be the case here. As argued below, enhanced damages should require a showing of intent. *See* Section II.B *infra* p. 18. Determinations of intent, as this Court has recognized, are questions of law fully amenable to appellate *de novo* review. *See Global-Tech Appliances, Inc. v. SEB S.A.*, 131 S. Ct. 2060, 2068 (2011). Additionally, the facts for establishing enhanced damages generally will predate the litigation, meaning that the trial judge's familiarity with the litigants' conduct will be of less relevance.

[8]Transcript of Oral Argument at 11–12, *eBay*, 547 U.S. 388 (Mar. 29, 2006) (No. 05-130).

[9]Ordinarily, the limitations of venue and the opportunity for declaratory judgment cabin the possibility of forum shopping. But the Federal Circuit has interpreted patent venue to effectively lie nationwide against accused infringers selling products nationally. *See VE Holding Corp. v. Johnson Gas Appliance Co.*, 917 F.2d 1574, 1584 (Fed. Cir. 1990). Conversely, the Federal Circuit has interpreted personal jurisdiction for declaratory judgment actions very narrowly, allowing accused infringers little choice in forum for such actions. *See Red Wing Shoe Co. v. Hockerson-Halberstadt, Inc.*, 148 F.3d 1355, 1361 (Fed. Cir. 1988). *See generally* Megan M. La Belle, *Patent Litigation, Personal Jurisdiction, and the Public Good*, 18 Geo. Mason L. Rev. 43, 69–81 (2010). The combination of these rulings gives patentees near total choice of forum. Of note, these rulings appear to be questionable on the law, and *amici* are challenging them in separate proceedings. *See, e.g.*, Brief of Amici Curiae Electronic Frontier Foundation, Public Knowledge, and Engine Advocacy in Support of Petitioner at 10, *In re TC Heartland, LLC*, No. 16-105 (Fed. Cir. Oct. 29, 2015) (seeking reversal of *VE Holding*).

of Texas, a remarkable volume for a district encompassing barely a percent of the nation's population. *See* Brian C. Howard, *2015 First Half Patent Case Filing Trends*, Lex Machina (July 14, 2015), URL *supra* p. ix.[10]

In particular, non-practicing entities who primarily focus on monetizing patents show the strongest preference for the Eastern District of Texas. *See, e.g.*, U.S. Gov't Accountability Office, *GAO-13-465, Intellectual Property: Assessing Factors that Affect Patent Infringement Litigation Could Help Improve Patent Quality* 24 (2013), *available at* URL *supra* p. xii (patent monetization entities "filed more lawsuits in the Eastern District of Texas than other types of plaintiffs); Yan Leychkis, *Of Fire Ants and Claim Construction: An Empirical Study of the Meteoric Rise of the Eastern District of Texas as a Preeminent Forum for Patent Litigation*, 9 Yale J.L. & Tech. 193, 214 (2007) ("[M]any such 'trolls' have shown a clear preference for the Eastern District over other venues.").

The existence of a single preferred patent forum is troubling in itself, as it "conjures negative images of a manipulable legal system in which justice is not imparted fairly or predictably." Kimberly A. Moore, *Forum Shopping in Patent Cases: Does Geographic Choice Affect Innovation?*, 79 N.C. L. Rev. 889, 892 (2001). But a truly problematic possibility is that the forum may actively want more patent cases and thus engage in practices to make itself more favorable to plaintiffs.

Several scholars contend that the patentee popularity of the Eastern District of Texas is due to forum-specific rules particularly favorable to patentees, a practice that some call "forum selling." *See* Daniel Klerman & Greg

[10]Based on 2010 Census figures, the district's population was 3.5 million, while the total U.S. population was 309 million.

Reilly, *Forum Selling*, 2015 S. Cal. L. Rev. (forthcoming) (manuscript at 3–4), URL *supra* p. ix; J. Jonas Anderson, *Court Competition for Patent Cases*, 163 U. Pa. L. Rev. 631, 634 (2015) (theorizing that "forum shopping in patent law is driven, at least in part, by federal district courts competing for litigants"). They note a number of factors that would motivate the judges of that district to want to draw in more patent cases, including personal intellectual interests, increased prestige, better allocations of judicial budgetary resources, and local economic growth, *see* Anderson, *supra*, at 661–66; Klerman & Reilly, *supra*, at 26–29; all of these motivations appear to be supported by the facts.

Indeed, the Eastern District of Texas judges have adopted numerous procedural rules that favor patentees. They have imposed barriers to summary judgment.[11] They have joined unrelated defendants and limited their collective argument papers.[12] And they have refused to transfer cases under 28 U.S.C. § 1404 to the point that their superior appellate court has issued the extraordinary writ of mandamus *nineteen times since 2008* to reject denials of venue transfers.[13]

---

[11]For example, Judge Gilstrap requires a round of letter briefs seeking permission to file any summary judgment motion. *See* Klerman & Reilly, *supra*, at 11 n.41 (citing judges' standing orders); Lionel M. Lavenue et al., *New E.D. Tex. Procedural Hurdle for Early Alice-Based Dispositive Motions*, Finnegan (Sept. 25, 2015), URL *supra* p. ix.

[12]*See* Klerman & Reilly, *supra*, at 15–16.

[13]*See In re Google Inc.*, No. 15-138, 2015 WL 5294800 (Fed. Cir. July 16, 2015); *In re Apple, Inc.*, 581 F. App'x 886 (Fed. Cir. 2014) (per curiam); *In re Nintendo of Am., Inc.*, 756 F.3d 1363 (Fed. Cir. 2014); *In re Toyota Motor Corp.*, 747 F.3d 1338 (Fed. Cir. 2014); *In re Toa Techs, Inc.*, 543 F. App'x 1006 (Fed. Cir. 2013); *In re Nintendo Co.*, 544 F. App'x 934 (Fed. Cir. 2013); *In re Google Inc.*, 588 F. App'x 988 (Fed.

It should be greatly concerning for a district court to adopt practices—especially practices favoring one side—in order to attract certain plaintiffs. Such a possibility should strongly caution against interpretations of laws that would encourage or expand the practice of forum shopping in patent cases.

2. Wide discretion for district judges over § 284, as Petitioners seek, would substantially worsen this ongoing problem of forum shopping in patent cases.

Undoubtedly certain courts will be more inclined to grant enhanced patent damages, and one would expect patentees to flock to those courts that awarded enhanced damages more readily. Consistent with this, a 2012 study found that the Eastern District of Texas found willful infringement 52% of the time, 10% more than the national average. Seaman, *supra*, at 451 tbl.4. To eliminate appellate control beyond abuse of discretion would thus allow patent asserters to avail themselves of harmful disuniformities among courts.

Furthermore, to the extent that courts do engage in forum selling, consciously or not, wide discretion over enhanced damages would be an ideal vehicle for that practice. While merits rulings improperly favoring patentees

---

Cir. 2014); *In re Oracle Corp.*, 399 F. App'x 587 (Fed. Cir. 2010); *In re EMC Corp.*, 677 F.3d 1351 (Fed. Cir. 2012); *In re Genentech, Inc.*, 566 F.3d 1338 (Fed. Cir. 2009); *In re TS Tech USA Corp.*, 551 F.3d 1315 (Fed. Cir. 2008); *In re Hoffmann-La Roche Inc.*, 587 F.3d 1333 (Fed. Cir. 2009); *In re Nintendo Co.*, 589 F.3d 1194 (Fed. Cir. 2009); *In re Acer Am. Corp.*, 626 F.3d 1252 (Fed. Cir. 2010); *In re Zimmer Holdings, Inc.*, 609 F.3d 1378 (Fed. Cir. 2010); *In re Biosearch Techs., Inc.*, 452 F. App'x 986 (Fed. Cir. 2011); *In re Morgan Stanley*, 417 F. App'x 947 (Fed. Cir. 2011) (per curiam); *In re Verizon Bus. Network Servs. Inc.*, 635 F.3d 559 (Fed. Cir. 2011); *In re Microsoft Corp.*, 630 F.3d 1361 (Fed. Cir. 2011).

are easily corrected on appeal, discretionary and procedural rulings evade review. *See* Klerman & Reilly, *supra*, at 33. Making awards of enhanced damages more discretionary and subject to less appellate review, then, would offer a perfect opportunity for judges to use such damages to signal their favorableness toward patentees. This Court should seek to avoid even the possibility of such a damaging result.

Accordingly, limitations on the discretion of district judges to award enhanced damages under § 284 are necessary to avoid an enhanced forum shopping problem in patent cases. This Court should not accept Petitioners' invitation to leave enhancement of damages to the total discretion of district courts.

B. Enhanced Damages Under Section 284 Should Require a Showing of Subjective Bad Faith

This Court should further ensure that awards of enhanced damages are limited to situations where the infringer is shown to have acted in subjective bad faith. Enhanced damages are a species of punitive damages, and numerous lines of case law limit punitive damages to situations of culpable conduct. Furthermore, protecting independent inventors from burdensome enhanced damage awards would serve the aims of the patent system.

1. It is well established that enhanced damages under § 284 are punitive in nature. *Seymour*, which interpreted the predecessor to § 284, described trebling of damages as limited to situations "where the injury is wanton or malicious," in which case "a jury may inflict vindictive or exemplary damages, not to recompense the plaintiff, but to punish the defendant." *See* 57 U.S. at

489. Indeed, *Seymour* considered the predecessor damages statute that awarded treble damages in all cases, and found that "[t]his rule was manifestly unjust." *Id.* at 488.

Cases following *Seymour* fell into accord. For example, the Seventh Circuit held that "it is only on the basis of conscious and wilful infringement that exemplary or punitive damages are allowed in addition to those which are compensatory." *Union Carbide*, 282 F.2d at 675.[14] Subsequently, that Court of Appeals read § 284 to "apply only in cases of bad faith where conscious and wilful infringement are found." *Deere & Co. v. Int'l Harvester Co.*, 658 F.2d 1137, 1146 (7th Cir. 1981).

Thus, *Seymour* and its progeny placed enhancement of patent damages squarely within the long and settled tradition of Anglo-Saxon law of punitive damages. *See Silkwood v. Kerr-McGee Corp.*, 464 U.S. 238, 255 (1984) ("Punitive damages have long been a part of traditional state tort law."); *Pac. Mut. Life Ins. Co. v. Haslip*, 499 U.S. 1, 15 (1999); *Wilkes v. Wood*, 98 Eng. Rep. 489, 498 (C.P. 1763).

And it is equally settled that punitive awards require a showing of culpable intent, that is, subjective bad faith. "There are a myriad of different formulations of the standards for punitive damages liability, but the unifying principle informing all of them is the defendant's consciousness of wrongdoing or awareness of conduct from which harm can be reasonably expected to flow." Section of Antitrust Law, Am. Bar Ass'n, *Punitive Damages and Business Torts* 38 (Thomas J. Collin ed., 1998); *see*

[14]Stryker claims that enhanced damages can be used "to compensate patentees," *see* Stryker Br. 30, but the primary line of cases it cites predates *Seymour* and is thus unreliable as precedent.

Restatement (Second) of Torts § 908(2) (1977) (punitive damages require "evil motive" or "reckless indifference to the rights of others"); David G. Owen, *A Punitive Damages Overview*, 39 Vill. L. Rev. 363, 364–65 (1994).

Thus, in copyright law, increased statutory damages under 17 U.S.C. § 504(c)(2) require that "the infringement was committed willfully," which courts have construed to mean that "the defendant had knowledge that its conduct constituted infringement or showed reckless disregard for the copyright holder's rights." *Lipton v. Nature Co.*, 71 F.3d 464, 472 (2d Cir. 1995). Similarly in admiralty, the owner of a vessel may be liable for actual damages to passengers but not for punitive damages where the owner "did not commit or in any manner countenance the wrong." *McGuire v. The Golden Gate*, 16 F. Cas. 141, 143 (C.C.N.D. Cal. 1856).

This Court's decisions on punitive damages in relation to the Due Process Clause further confirm that subjective bad faith is required under statutes like § 284. "Perhaps the most important indicium" among this Court's guideposts for constitutionality of a punitive damages award is "the degree of reprehensibility of the defendant's conduct." *BMW of N. Am. v. Gore*, 517 U.S. 559, 575 (1996). Subsequently this Court said that such damages "should only be awarded if the defendant's *culpability* . . . is so reprehensible as to warrant the imposition of further sanctions." *State Farm Mut. Auto. Ins. Co. v. Campbell*, 538 U.S. 408, 419 (2003) (emphasis added).

Accordingly, diverse areas of law all point to the conclusion that enhanced damages under § 284 should be limited to subjective bad faith, as other punitive damage awards are limited.

2. Furthermore, a subjective bad faith requirement applied to § 284 would advance the public interest by protecting small companies from undue threats.

As discussed previously, small businesses are unusually susceptible to patent assertion demands, given the financial difficulty of analyzing and opposing such assertions. *See supra* p. 7. Such companies are almost always unsuspecting independent inventors rather than intentional, bad-faith copyists. *See infra* p. 29. Thus, a subjective bad faith requirement should shield companies from undue threats of treble damages by making such threats legally unsupportable.

Shielding those lacking bad faith from enhanced damages comports with the principle that patent remedies ought to be in proportion to the degree of wrongful conduct, in order to prevent conferring too much power upon threats of patent assertion. *See Garretson v. Clark*, 111 U.S. 120, 121 (1884); *VirnetX, Inc. v. Cisco Sys., Inc.*, 767 F.3d 1308, 1326 (Fed. Cir. 2014). It further comports with a long line of scholarship criticizing the public costs of strong patent remedies charged to independent inventors. *See, e.g.*, Mark A. Lemley, *Should Patent Infringement Require Proof of Copying?*, 105 Mich. L. Rev. 1525, 1533 (2007) (recommending that § 284 "distinguish independent inventors from copiers, making treble damages available only against the latter"); Michelle Armond, *Introducing the Defense of Independent Invention to Motions for Preliminary Injunctions in Patent Infringement Lawsuits*, 91 Cal. L. Rev. 117, 120–21 (2003) (recommending an independent invention defense to preliminary injunctions, a remedy that "inspires fear" among accused infringers); Carl Shapiro, *Prior User Rights*, 96 Am. Econ. Rev. 92 (2006).

3. Petitioner Stryker agrees that culpability should be the "principal question" for § 284 enhanced damages, Stryker Br. 36, but nevertheless believes that enhanced damages could be levied against even a non-culpable defendant, *id.* at 42–43. This is unsatisfactory because it ignores pre-litigation threats.

A clear statement that non-culpability will protect a party from enhanced damages will ensure that undue threats directed to small, good-faith actors will have no leg to stand on. But Stryker's unmoored standard, however charitably district courts may treat it, will still allow abusive patent asserters to use the force of doubt to extract undue settlements and demands.

Accordingly, subjective bad faith should be a prerequisite to enhanced damages under § 284. Such an interpretation would be consonant with existing law, and it would advance valuable public interest goals.

C. Bad Faith Should Not Follow from a Reasonable Belief in Invalidity, Regardless of When the Belief Was Perfected

When a party has a reasonable belief that a patent is invalid, that party should not be deemed to have acted in bad faith.[15] This should be so even if the party developed its complete reasons for invalidity at a later time such as during litigation. Both of these propositions are justified by strong policy considerations for protecting the interests of small innovators.

1. Enhanced damages should not generally be permitted against those with good faith, reasonable beliefs of invalidity, for at least the following reasons.

[15] It goes without saying that a good faith belief in noninfringement also is inconsistent with and should preclude a finding of bad faith.

a. There is little question that many patents are invalid. One study estimated that between 39% of software patents and 56% of business method patents in force today are invalid. *See* Shawn P. Miller, *Where's the Innovation: An Analysis of the Quantity and Qualities of Anticipated and Obvious Patents*, 18 Va. J.L. & Tech. 1, 7 (2013). Among patents challenged in litigation, "[r]oughly half" are invalidated. Mark A. Lemley & Carl Shapiro, *Probabilistic Patents*, 19 J. Econ. Persp. 75, 76 (2005). And of those challenged through the administrative procedure of *inter partes* review, 75% are fully invalidated or disclaimed. *See* Brian J. Love & Shawn Ambwani, Inter Partes *Review: An Early Look at the Numbers*, 81 U. Chi. L. Rev. Dialogue 93, 94 (2014).[16]

So unreliable for validity is the grant of a patent that Justice Kagan noted that "we're in a different universe entirely," one where "you could flip a coin as to whether a patent is valid or invalid and be pretty close." Transcript of Oral Argument at 12, *Commil USA, LLC v. Cisco Sys., Inc.*, 135 S. Ct. 1920 (Mar. 31, 2015) (No. 13-896). Chief Justice Roberts, remarking on 35 U.S.C. § 282(a) which states that patents are presumed valid, quipped: "That's not much of a presumption of validity." *Id.* at 4.

---

[16]Furthermore, when this Court clarified the abstract ideas doctrine in *Alice Corp. Pty. Ltd. v. CLS Bank International*, *see* 134 S. Ct. 2347, 2357–59 (2014), many more issued patents were rendered invalid. Jasper L. Tran, *Software Patents: A One-Year Review of* Alice v. CLS Bank, 97 J. Pat. & Trademark Off. Soc'y 532, 540 (2015) (noting 69.7% invalidation rate in district courts for patents challenged under *Alice*). *But see TXED Rejects 73% of 35 USC § 101 Pretrial Challenges in 2015*, DocketNavigator DocketReport (Aug. 10, 2015), URL *supra* p. xii (noting the Eastern District of Texas to be a substantial outlier).

Since so many patents are invalid, it would be unsurprising and commonplace for a company faced with a patent assertion to believe that the asserted patent is invalid and to act accordingly. Such behavior cannot be called culpable or in bad faith; it would stretch those words beyond reasonable comprehension to say otherwise. And if threat of treble damages forces companies to treat issued patents as valid even when half of them are not, that would "multiply the opportunities for holders of invalid patents to exact licensing agreements." *Blonder-Tongue Labs., Inc. v. Univ. of Ill. Found.*, 402 U.S. 313, 342 (1971). Ensuring that those with good faith beliefs in invalidity retain some shield from excessive damages will go far toward avoiding that unnecessary tribute.

b. Furthermore, if the prospect of enhanced damages chills defendants from challenging patents, the public interest suffers. The public "has a 'paramount interest in seeing that patent monopolies are kept within their legitimate scope.'" *Medtronic, Inc. v. Mirowski Family Ventures, LLC*, 134 S. Ct. 843, 851 (2014) (quoting *Precision Instrument Mfg. Co. v. Auto. Maint. Mach. Co.*, 324 U.S. 806, 816 (1945)). Accordingly, this Court has repeatedly interpreted patent law to encourage challenges to patent validity. *See, e.g., Blonder-Tongue*, 402 U.S. at 350 (expanding applicability of collateral estoppel for patent invalidity); *Cardinal Chem. Co. v. Morton Int'l, Inc.*, 508 U.S. 83, 102–03 (1993) (rejecting Federal Circuit rule that automatically vacated invalidity determinations); *Lear, Inc. v. Adkins*, 395 U.S. 653, 670–71 (1969) (overruling precedent that prevented licensees from challenging validity).

Again, the threat of enhanced damages could discourage a defendant from fully litigating an invalidity chal-

lenge, pushing that defendant to early settlement. This result would frustrate that ongoing public purpose of encouraging validity challenges. By holding that those with good faith arguments for invalidity lack the bad faith necessary for enhanced damages, this Court would go a long way to encouraging parties to take up the public good.

c. Neither the statutory presumption of validity under 35 U.S.C. § 282(a) nor *Commil* requires otherwise. The presumption of validity relates to the burden of persuasion at trial, not substantive patent doctrine. *See, e.g., Nautilus, Inc. v. Biosig Instruments, Inc.*, 134 S. Ct. 2120, 2130 n.10 (2014); *Microsoft Corp. v. i4i Ltd. P'ship*, 131 S. Ct. 2238, 2253 (2011) (Breyer, J., concurring). It thus has little to do with post-trial issues such as damages.[17] And Petitioner Stryker agrees that *Commil* is distinguishable because that case "was dictated by the statutory text of the inducement provision," a statute not at issue here.[18]

The problem of patent quality thus bolsters the view that enhanced damages should be limited to rare circumstances, lest the threat of treble damages force companies, even faced with the most plainly invalid patents, "to pay tribute to would-be monopolists without need or justification." *Lear*, 395 U.S. at 670. This Court, in whatever standard it fashions for § 284, should ensure that enhanced damages remain so limited.

---

[17]Of note, Halo made much of the presumption of validity in its petition brief, *see* Halo Pet. Cert. 21–22, but apparently walks away from that argument, making no reference at all to 35 U.S.C. § 282(a) in its merits brief.

[18]*Commil* is further distinguishable because it dealt with a situation where " a defendant could prevail if he proved he reasonably believed the patent was invalid." 135 S. Ct. at 1929. Here, by contrast, it is undisputed that the defendant will pay actual damages and thus not get off scot free.

2. Petitioners also argue that only invalidity arguments formed at the time of initial discovery of the patent should count in favor of good faith, and that "later-developed defenses" should be ignored. Halo Br. 24; Stryker Br. 49. But in fact there is nothing improper or culpable in perfecting an invalidity argument at the time of litigation rather than the time of infringement.

Petitioners would impose a heavy burden on those who receive patent demands. A company receiving a demand letter would be faced with a stark choice: immediately hire an attorney to prepare a written opinion as to the scope and validity of the asserted patents or face the prospect of treble damages. For all practical purposes, this would be a return to the disastrous regime of *Underwater Devices*. *See* Powers & Carlson, *supra*, at 78–82 (describing how *Underwater Devices* was applied in litigation). This burden would fall hardest on small innovators that cannot easily bear the cost of legal advice.

To see how wasteful this rule would be in practice, consider the infamous demand letter campaign of MPHJ Technology Investments (MPHJ), a patent assertion entity that owns a patent family relating to scanning documents to email. In 2012 and 2013, MPHJ sent demand letters to approximately 16,465 small businesses located in all fifty states. *See In re MPHJ Tech. Invs., LLC*, 159 F.T.C. 1004, 1008 (Mar. 13, 2015). In these letters, which it sent using the names of over 100 subsidiaries, MPHJ demanded that small businesses pay as much as $1,000 per employee for using standard office equipment. *See id.* at 1007–08, 1010. If Petitioners' proposal is accepted, then each of the more than 10,000 recipients of these letters would have to get an immediate opinion of counsel to ensure that, for damages purposes, its de-

fenses would not be ignored as "later-developed." This would impose severe financial pressure on already vulnerable small businesses targeted by patent assertion entities. And it would be an especially wasteful exercise at least in the case of MPHJ, who apparently never actually intended to engage in patent litigation. *See id.* at 1012. Given the existence of entities like MPHJ, there is nothing wrong, let alone treble-damages punishable, with a small company taking the wait-and-see approach that Petitioners criticize.

Furthermore, in many instances, a company might have a good faith belief that it is not liable without formal advice of counsel. For example, the accused inducer may evaluate the charge and conclude—in good faith—that the patent owner's rights have not been violated because the accused infringer had publicly used the accused functionality before the apparent priority date. *See* 35 U.S.C. § 102(a)(1). That is, the accused infringer could legitimately believe that if the patent is construed to cover the allegedly infringing acts, the patent will be invalidated as anticipated, but if the patent is construed so as to not be anticipated, then the accused acts will not read on the elements of the claim. *See Schering Corp. v. Geneva Pharm., Inc.*, 339 F.3d 1373, 1379 (Fed. Cir. 2003) ("that which would literally infringe if later in time anticipates if earlier" (internal quotation and citation omitted)). Under Petitioners' proposed rule, however, this accused infringer will likely be pressured to develop a contemporaneous formal opinion to ensure its defenses can later be used to defeat any claim for enhanced damages.

Even one of the Petitioners concedes that the rule in *Underwater Devices* caused "years of problems." Halo Br. 21. This Court should not accept the invitation to

return to this flawed regime. Rather than increase the *in terrorem* power of patent trolls, the Court should ensure that any rule is sensitive to the fact that many small businesses, acting in good faith, will not be able to immediately develop a legal defense upon learning about a patent. Such behavior is not the kind of culpable intent that warrants enhanced damages.

III. Petitioners' Reasons for Expanding Enhanced Damages Are Detached from the Reality of Patent Assertion

Petitioners seek an expanded § 284 based on their account of large firms who intentionally copy and steal the ideas of small patentees, leaving those small patentees helpless in the face of impossible-to-reach enhanced damage awards. Other *amici* seeking to expand patent strength repeat this same story. But this account is largely uncharacteristic of actual patent practices today; the reality of patent assertion counsels toward limiting enhanced damage awards, not expanding them.

As an initial matter, Petitioners claim that "patent holders will almost never receive enhanced damages" in view of *Seagate*. Halo Br. 28; Stryker Br. 52. That is flatly not true. Willful patent infringement was found in 37% of cases even after *Seagate*; enhanced damages were awarded in 54% of those. Seaman, *supra*, at 441 tbls.1 & 466 table 6.[19]

[19] In contrast, awards of attorney fees under 35 U.S.C. § 285 prior to *Octane Fitness, LLC v. Icon Health & Fitness, Inc.*, 134 S. Ct. 1749 (2014), to which Petitioners analogize, were *actually* difficult to obtain: one study found that attorney fees were awarded a scant 0.6% of the time prior to that decision. *See* Mark Liang & Brian Berliner, *Fee Shifting in Patent Litigation*, 18 Va. J.L. & Tech. 59, 87 (2013).

More critically, Petitioners repeatedly couch their call for expanding enhanced damages within a narrative of "unscrupulous copyists determined to profit from the inventions of another." Stryker Pet. Cert. 38; *see, e.g.*, Halo Br. 28 (lamenting how "copyists owe no more than unwitting infringers); Stryker Br. 52–53. But that is an aberrant narrative, uncharacteristic of modern innovation practices and poorly suited to guiding the general interpretation of § 284.

Intentional copying is actually very rare. One study found that a written finding of copying occurred in *less than half a percent* of patent cases, excluding a particular type of pharmaceutical patent litigation that requires an allegation of copying. *See* Christopher A. Cotropia & Mark A. Lemley, *Copying in Patent Law*, 87 N.C. L. Rev. 1421, 1452 (2009).[20] In fact, copying is not even alleged at all in almost 90% of patent infringement cases. *See id.* at 1443.

These results led the study's authors to conclude that punitive measures like enhanced damages "have no place in a patent regime where virtually all infringement is unintentional." *Id.* at 1463. They also make Petitioners' reflections on the evils of invention copying seem positively antiquated, a relic of "a time when widespread disregard of patent rights was undermining the national innovation

[20]Patent litigation under the Hatch-Waxman Act, known as ANDA litigation, requires a generic pharmaceutical manufacturer to declare that it has exactly copied a patented pharmaceutical compound for litigation to be triggered. *See id.* at 1444; Federal Food, Drug, and Cosmetic Act § 505(j)(2)(A)(iv), 21 U.S.C. § 355 (2012) (requiring application for new generic drug approval to assert bioequivalency with patented drug); 35 U.S.C. § 271(e)(2)(A) (making such application an act of infringement).

incentive." *Knorr-Bremse*, 383 F.3d at 1343 (characterizing *Underwater Devices*). The Federal Circuit recognized that this time has long passed in overruling *Underwater Devices*; this Court should find no differently.

The common scenario, instead, is that of Kate Doerksen from the beginning of this brief. A company who independently builds or uses a new technology, only to have a patent unexpectedly sprung upon it. An asserter who uses patents as a saber, not a shield, ready to cut off the hands of innovators. A looming threat of high attorney fees and extraordinary damage awards.

This is the scenario that is so common and concerning as to catch the conscience of Congress, the White House, numerous commentators, and even this Court. And in the context of this case, it militates toward a principle of "do no harm." This Court should not open the floodgates to threats of enhanced damages. To do otherwise would endow patent abusers with enhanced threats. That would discourage entrepreneurs from entering technology fields mined with such abusers. And that would deprive the public of innovation that could have been.

CONCLUSION

This Court should construe 35 U.S.C. § 284 in accordance with the principles laid out in this brief.

Respectfully submitted,

CHARLES DUAN
Counsel of Record
PUBLIC KNOWLEDGE
1818 N Street NW, Suite 410
Washington, DC 20036
(202) 861-0020
cduan@publicknowledge.org

DANIEL NAZER
ELECTRONIC FRONTIER FOUNDATION
815 Eddy Street
San Francisco, CA 94109
(415) 436-9333
daniel@eff.org

Counsel for amici curiae

December 2015

Supreme Court, U.S.
FILED
DEC 16 2015
OFFICE OF THE CLERK

Nos. 14-1513 and 14-1520

IN THE

Supreme Court of the United States

HALO ELECTRONICS, INC.,

Petitioner,

v.

PULSE ELECTRONICS, INC., ET AL.

Respondents.

STRYKER CORP., ET AL.,

Petitioners,

v.

ZIMMER, INC., ET AL.,

Respondents.

On Writs of Certiorari to the United States Court of Appeals for the Federal Circuit

---

BRIEF OF *AMICI CURIAE* SMALL INVENTORS IN SUPPORT OF PETITIONERS

[*Amici* Listed on Inside Cover]

ANDREW S. BALUCH*
STEPHEN G. NAGY
STRAIN & STRAIN PLLC
1455 Pennsylvania Ave., N.W.
Suite 400
Washington, D.C. 20004
(202) 621-1872
andrew.baluch@strainpllc.com

ROBERT N. SCHMIDT
CLEVELAND MEDICAL DEVICES INC.
4415 Euclid Ave.
Suite 400
Cleveland, OH 44103
(216) 374-7237

**Counsel of Record*

Counsel for Amici Curiae

LIST OF *AMICI CURIAE*
SMALL INVENTORS

U.S. Inventor
Edison Nation
Inventors Digest
National Society of Inventors
Inventors Network of the Capital Area
Texas Inventors Association
San Diego Inventors Forum
Columbus Phenix City Inventors Association
Music City Inventors Group
Small Business Technology Council
Edison Innovators Association
Louis J. Foreman
Paul Morinville
James Innes

TABLE OF CONTENTS

TABLE OF AUTHORITIES ii

INTEREST OF *AMICI CURIAE* 1

SUMMARY OF ARGUMENT 5

ARGUMENT 7

I. At Stake In This Case Is America's Single Greatest Competitive Advantage—The Creation And Licensing Of Intellectual Property 7

II. The Routine Denial Of Enhanced Damages Has Given Rise To Today's "Efficient Infringement" Problem 12

III. This Court Has Already Set Workable Guideposts For Deciding Whether To Increase Patent Damages 17

A. Loss of customers or market share 18

B. Failure to act in good faith 19

C. Unnecessary expense, injury, or trouble ..20

D. Any special inconvenience 21

E. Stubbornly litigious infringer 21

F. Making infringement unprofitable 22

CONCLUSION 24

TABLE OF AUTHORITIES

Cases

Birdsall v. Coolidge, 93 U.S. 64, 69-70 (1876) 12

Carnegie Mellon Univ. v. Marvell Tech. Group, 2015 U.S. App. LEXIS 13622, *42 (Fed. Cir. Aug. 4, 2015) 15

Clark v. Wooster, 119 U.S. 322, 326 (1886) 12, 23, 27

Consolidated Rubber Tire Co. v. Diamond Rubber Co., 226 F. 455, 465 (D.N.Y. 1915) 25

Day v. Woodworth, 54 U.S. 363, 372 (1851) ..... passim

Dean v. Mason, 61 U.S. 198, 203 (1858) 12, 23

eBay Inc. v. MercExchange, LLC, 547 U.S. 388 (2006) 17, 20

Global Traffic Techs., LLC v. Morgan, 2015 U.S. App. LEXIS 9281, *20 (Fed. Cir. Jun. 4, 2015) 15

Innovention Toys, LLC v. MGA Entm't, Inc., 611 Fed. App'x 693, 701 (Fed. Cir. Apr. 29, 2015) 15

Kellogg v. Nike, Inc., 2009 U.S. Dist. LEXIS 90432, *35 (D. Neb. Sept. 30, 2009) 28

TABLE OF AUTHORITIES—Continued

Powell v. Home Depot U.S.A., Inc., 663 F.3d 1221, 1238 (Fed. Cir. 2011) 18

Rite-Hite Corp. v. Kelley Co., 56 F.3d 1538, 1554 (Fed. Cir. 1995) (en banc)..... 18

Seymour v. McCormick, 57 U.S. 480, 488-89 (1853) 12, 23

Stryker Corp. v. Zimmer, Inc., 782 F.3d 649, 662 (Fed. Cir. 2015)..... 15

Teese v. Huntingdon, 64 U.S. 2, 9 (1860) 12, 23, 24, 25

Tilghman v. Proctor, 125 U.S. 136, 143-44 (1888) 12, 23

Topliff v. Topliff, 145 U.S. 156, 174 (1892) 12, 23

Univ. of Pittsburgh of the Commonwealth Sys. of Higher Educ. v. Varian Med. Sys., 561 Fed. App'x 934, 945 (Fed. Cir. Apr. 10, 2014)..... 16

WesternGeco LLC v. Ion Geophysical Corp., 791 F.3d 1340, 1354 (Fed. Cir. 2015)..... 15

Statutes

35 U.S.C. § 284 ..... 6, 7, 11, 14

TABLE OF AUTHORITIES—Continued

35 U.S.C. § 285 11

35 U.S.C. § 298 20

Patent Act of 1836, ch. 357, § 14, 5 Stat. 117 (1836) 8

Patent Act of 1870, ch. 230, § 55, 16 Stat. 198 (1870) 9

Patent Act of 1946, Pub. L. No. 79-587, 60 Stat. 778 11

Other Authorities

ADDRESS OF THE ADVOCATE OF THE PATENTEES, INVENTORS OF USEFUL IMPROVEMENTS IN THE ARTS AND SCIENCES: IN DEFENCE OF MENTAL PROPERTY 9 (Dec. 19, 1806) 1

ALBERT A. WALKER, TEXT-BOOK OF THE PATENT LAWS OF THE UNITED STATES OF AMERICA §§ 567-568 (2d ed. 1889) ..... passim

ANTHONY BREITZMAN & DIANA HICKS, AN ANALYSIS OF SMALL BUSINESS PATENTS BY INDUSTRY AND FIRM SIZE i, v (Nov. 2008) 5, 15

Colleen Chien, Editorial, *The Best Way to Fight a Patent Demand May Be to*

TABLE OF AUTHORITIES—Continued

Do Nothing, WALL STREET JOURNAL, Nov. 23, 2015, at R5 .....5, 13, 19

Douglas A. Irwin, *Historical Perspectives on U.S. Trade Policy*, NBER REPORTER (2006) 8

FEDERAL RESERVE BANK OF CLEVELAND, 2005 ANNUAL REPORT, at 17.....6, 9

IAN HATHAWAY & ROBERT E. LITAN, *DECLINING BUSINESS DYNAMISM IN THE UNITED STATES: A LOOK AT STATES AND METROS*, BROOKINGS INSTITUTE, at 1 (May 2014) 17

Joe Nocera, Editorial, *The Patent Troll Smokescreen*, NEW YORK TIMES, Oct. 24, 2015, at A23.....5, 13, 14

John D. Wiley, Opinion, *Patent Infringement is Theft, Plain and Simple*, WASHINGTON POST, Nov. 17, 2015.....5, 13

JONATHAN ROTHWELL *ET AL.*, *PATENTING PROSPERITY: INVENTION AND ECONOMIC PERFORMANCE IN THE UNITED STATES AND ITS METROPOLITAN AREAS*, BROOKINGS INSTITUTE at 15 (Feb. 2013) ..9

TABLE OF AUTHORITIES—Continued

MARK TWAIN, A CONNECTICUT YANKEE IN KING ARTHUR'S COURT (1889). 7

Pat Choate, *Patent Theft as a Business Strategy*, HUFFINGTON POST, May 23, 2010 ..... 15, 23

RESTATEMENT (THIRD) OF TORTS: PHYS. & EMOT. HARM, § 2 (2010) 20

Richard A. Epstein, *Intellectual Property and the Law of Contract: The Case Against "Efficient Breach"*, 9 EUROPEAN REVIEW OF CONTRACT LAW 345 (2013) 15

ROBERT W FAIRLIE *ET AL.*, THE KAUFFMAN INDEX STARTUP ACTIVITY: NATIONAL TRENDS 2015 ..... 6, 16

Roger Smeets, *Hoisted By Your Own Petard: The Opportunity Cost Of Inventor Persistence In Patent Litigation*, ACAD. MGMT. PROC. (Jan. 2015) 21

S. Rep. No. 79-1503, at 2 (1946) 7, 11, 22

Senate Report Accompanying S. 239, 24th Cong., 1st Sess. (Apr. 28, 1836) 8, 12

TABLE OF AUTHORITIES—Continued

SMALL BUSINESS ADMINISTRATION, OFFICE OF ADVOCACY: THE VOICE OF SMALL BUSINESS IN GOVERNMENT (Jan. 2011) 2

Stephen H. Haber & Seth H. Werfel, *Why Do Inventors Sell to Patent Trolls? Experimental Evidence for the Asymmetry Hypothesis*, Hoover IP² Working Paper No. 15009 (Jan. 23, 2015) 22

U.S. BUREAU OF ECONOMIC ANALYSIS, U.S. INTERNATIONAL TRADE IN GOODS AND SERVICES (Sept. 2015) 6, 9, 12

INTEREST OF *AMICI CURIAE*[1]

> *A man's useful inventions subject him to insult, robbery, and abuse.* –Benjamin Franklin.[2]

Amici curiae are individual inventors and associations of inventors that share a common interest in a robust patent system that encourages and appropriately rewards successful inventive pursuits. Collectively, *amici* have invested significant energy and personal resources in research and development in their respective technical fields. *Amici* rely on patents to protect those investments and to commercialize their discoveries through licensing. Due to their small size, *amici* oftentimes lack the resources or manufacturing ability to commercialize all aspects of an invention themselves and therefore must rely on licensing to bring their products to market. But a large company's incentive to take a license from a small inventor is all but eliminated, as in the cases at bar, if the only

---

[1] In accordance with Supreme Court Rule 37.6, *amici curiae* state that this brief was not authored, in whole or in part, by counsel to a party, and that no monetary contribution to the preparation or submission of this brief was made by any person or entity other than the *amici curiae* or its counsel. Petitioners and Respondent Pulse have filed a letter of blanket consent to *amici*. Respondent Zimmer granted consent to *amici* on December 2, 2015, via electronic mail, a copy of which is being submitted herewith.

[2] ADDRESS OF THE ADVOCATE OF THE PATENTEES, INVENTORS OF USEFUL IMPROVEMENTS IN THE ARTS AND SCIENCES: IN DEFENCE OF MENTAL PROPERTY 9 (Dec. 19, 1806).

punishment for refusing a license and losing an infringement suit is the same royalty it would have paid for the license in the first place.

Small firms, like those represented by *amici*, are important to the innovation ecosystem because small firms hire 43 percent of America's high tech workers (e.g., scientists, engineers, computer programmers), produce 16.5 times more patents per employee than large patenting firms, have generated 65 percent of net new jobs over the past 17 years, and make up 97.5 percent of all identified U.S. exporters.[3]

Amici include: U.S. Inventor, Edison Nation, Inventors Digest, National Society of Inventors, Inventors Network of the Capital Area, Texas Inventors Association, San Diego Inventors Forum, Columbus Phenix City Inventors Association, Music City Inventors Group, Small Business Technology Council, Edison Innovators Association, Paul Morinville, James Innes, and Louis J. Foreman.

U.S. Inventor is a non-profit association of inventors devoted to protecting the intellectual property of individuals and small companies through education, advocacy, and reform. Believing the interests of larger corporations to be disproportionately overrepresented in the current

---

[3] SMALL BUSINESS ADMINISTRATION, OFFICE OF ADVOCACY: THE VOICE OF SMALL BUSINESS IN GOVERNMENT (Jan. 2011) (citing U.S. Dept. of Commerce, Census Bureau and Intl. Trade Admin.; Advocacy-funded research by Kathryn Kobe, 2007 (archive.sba.gov/advo/ research/rs299tot.pdf) and CHI Research, 2003 (archive.sba.gov/advo/re- search/rs225tot.pdf); U.S. Dept. of Labor, Bureau of Labor Statistics).

discussion regarding patent reform, U.S. Inventor aims to encourage dialogue between lawmakers, inventors, and other patent stakeholders concerning the effects of past and proposed patent reform legislation and federal court decisions on the patent rights of small businesses and sole inventors.

The Small Business Technology Council advocates for the over 5,900 highly inventive firms that participate in the Small Business Innovation Research (SBIR) and Small Business Technology Transfer (STTR) programs.

The Edison Innovators Association is a group of inventors, product innovators, entrepreneurs, professionals, and curious minds with the goal to help each other take their ideas from a cocktail napkin to finished product or process. Unfortunately, during the past few years, the Edison Innovators Association has seen its attendance fall from 50-70 people per meeting to 10-20 people per meeting, with attendees lamenting, "Why would I patent anything? It is not worth the paper it is printed on."

Louis J. Foreman is founder and Chief Executive of Enventys, the CEO of Edison Nation and Edison Nation Medical, the Executive Producer of the award-winning PBS show Everyday Edisons, author of The Independent Inventor's Handbook, and publisher of Inventor's Digest. Himself an inventor on twelve U.S. patents, Mr. Foreman has created nine successful startups and has been directly responsible for the creation of over twenty others.

Whereas large firms can and do survive without strong patent rights, small businesses cannot. *Amici* join together in this brief to underscore the importance of patents to independent inventors and entrepreneurs who rely on licensing from willing licensees to help commercialize inventions. Without the economic returns of a license taken by a willing licensee, inventors have less incentive to engage in costly R&D, and investors have less incentive to fund small startups like those of *amici*.

SUMMARY OF ARGUMENT

The "patent reform" pendulum today has swung so far against patent owners that, in the past two months alone, *The Wall Street Journal*, *The New York Times*, and *The Washington Post* have each chronicled the rise of "efficient infringing"—large companies routinely ignoring patent licensing offers from small inventors. *See* Joe Nocera, Editorial, *The Patent Troll Smokescreen*, NEW YORK TIMES, Oct. 24, 2015, at A23; Colleen Chien, Editorial, *The Best Way to Fight a Patent Demand May Be to Do Nothing*, WALL STREET JOURNAL, Nov. 23, 2015, at R5 (finding that "many companies resolve [patent infringement] threats by simply filing them away"); John D. Wiley, Opinion, *Patent Infringement is Theft, Plain and Simple*, WASHINGTON POST, Nov. 17, 2015 (explaining it is efficient to "infringe patents held by others and then settle in court when sued for infringement instead of simply paying modest (and mutually negotiated) licensing fees"). With little risk of enhanced damages or an injunction, large corporate infringers have little incentive to take a license, especially from small inventors like *amici*.

The current anti-patent climate is particularly harmful to America's individual inventors and startups: "small firms are much more likely to develop emerging technologies than are large firms," and small firms "develop more patents per employee than large firms." ANTHONY BREITZMAN & DIANA HICKS, AN ANALYSIS OF SMALL BUSINESS PATENTS BY INDUSTRY AND FIRM SIZE i, v (Nov. 2008). Today's anti-patent climate, unfortunately, coincides with

the lowest period of startup formation per capita in 35 years, which has not recovered even as the U.S. economy has improved. ROBERT W. FAIRLIE *ET AL.*, THE KAUFFMAN INDEX STARTUP ACTIVITY: NATIONAL TRENDS 2015, at 22.

Crucially, America's economy relies on intellectual property for its primary competitive advantage: of all categories of goods and services that make up America's economy today, America's *single largest trade surplus* is in "charges for the use of intellectual property" (receiving $130 billion in IP royalties and license fees from foreigners, while paying foreigners only $42 billion in 2014). U.S. BUREAU OF ECONOMIC ANALYSIS, U.S. INTERNATIONAL TRADE IN GOODS AND SERVICES (Sept. 2015). Without this single largest surplus in IP licensing to offset other categories of trade, America's overall trade deficit would grow by about 18%, to over $590 billion. *Id.* Patents, in particular, are the "largest factor" in predicting a community's relative income, "followed by education then industry specialization." FEDERAL RESERVE BANK OF CLEVELAND, 2005 ANNUAL REPORT, at 17.

But a large company's incentive to take a license from a small inventor is all but eliminated, if the only punishment for refusing a license and losing an infringement suit is the same royalty it would have paid for the license in the first place. This Court should restore the discretionary enhancement of damages under 35 U.S.C. § 284, back to the statute's historically broad scope under the Patent Acts of 1836 and 1870, and in line with Congress' intent that the "discretion to award triple damages . . will discourage infringement of a patent by anyone

thinking that all he would be required to pay if he loses the suit would be a royalty." S. Rep. No. 79-1503, at 2 (1946).

ARGUMENT

I. At Stake In This Case Is America's Single Greatest Competitive Advantage—The Creation And Licensing Of Intellectual Property

> *A country without a patent office and good patent laws is just a crab and can't travel any way but sideways and backwards.* –Mark Twain.[4]

This case requires interpreting America's oldest enhanced damages statute. Enacted in 1836, the statutory power to increase a jury's damages award was the first, and for a while the only, provision of its kind: "The only instance where this power of increasing the 'actual damages' is given by statute is in the patent laws of the United States." *Day v. Woodworth*, 54 U.S. 363, 372 (1852).

The discretion conferred in the Patent Act of 1836 is at least as broad as today's under 35 U.S.C. § 284; the former stated: "[I]t shall be in the power of the court to render judgment for any sum above the amount found by such verdict as the actual damages sustained by the plaintiff, not exceeding three times

---

[4] MARK TWAIN, A CONNECTICUT YANKEE IN KING ARTHUR'S COURT (1889).

the amount thereof, according to the circumstances of the case, with costs . . . ." Patent Act of 1836, ch. 357, § 14, 5 Stat. 117 (1836).

Congress enacted the Patent Act of 1836 with the goal of spurring America's nascent manufacturing industry and positioning the country as a future economic rival of Europe. The accompanying Senate Report stated:

> Formerly, we borrowed and copied much that was valuable from Europe. Now, Europe is borrowing and copying, with no little advantage, from us; and she must not be too much surprised if she shall soon find a formidable balance against her. . . . Who can predict the results, even in a few years, of that spirit of enterprise which pervades the Union, when, aided by the Genius of Invention, and propelled onward by powers which she alone can bring into exercise?

Senate Report Accompanying S. 239, 24th Cong., 1st Sess. (Apr. 28, 1836).

As if on cue, within a few years of the Patent Act of 1836, America began to broaden its economic base beyond agriculture and raw materials towards manufacturing. Initially a large net importer of manufactured goods since colonial times, America's trade gap in manufactured goods steadily narrowed during the second half of the 19th century; and by 1910, America was exporting more manufactured goods than it was importing. *See* Douglas A. Irwin, *Historical Perspectives on U.S. Trade Policy*, NBER Reporter (2006).

This trend towards a knowledge-based economy continues to this day. Of all categories of goods and services that make up U.S. trade today, the country's *single largest trade surplus* is in "charges for the use of intellectual property" (receiving $130 billion in IP royalties and license fees from foreigners, while paying foreigners only $42 billion in 2014). U.S. BUREAU OF ECONOMIC ANALYSIS, U.S. INTERNATIONAL TRADE IN GOODS AND SERVICES (Sept. 2015) (hereinafter "BEA REPORT"). Without this single largest surplus in IP licensing to offset other categories of trade, America's overall trade deficit would grow by about 18%, to over $590 billion. *Id.* Patents, in particular, have become the single "largest factor" in predicting a community's relative income, more than education, infrastructure, or industry specialization. FEDERAL RESERVE BANK OF CLEVELAND, 2005 ANNUAL REPORT, at 17 (hereinafter "FED REPORT"). *See* JONATHAN ROTHWELL *ET AL.*, *PATENTING PROSPERITY: INVENTION AND ECONOMIC PERFORMANCE IN THE UNITED STATES AND ITS METROPOLITAN AREAS*, BROOKINGS INSTITUTE at 15 (Feb. 2013) (finding that "[i]f the metro areas in the lowest quartile patented as much as those in the top quartile, they would boost their economic growth by . an **extra $4,300 per worker**") (emphasis added).

During the 19th and 20th centuries, when the United States experienced unprecedented industrial growth, Congress not only maintained the statutory power to enhance patent damages in actions at law, but further extended that power in 1870 to actions in equity. Patent Act of 1870, ch. 230, § 55, 16 Stat. 198 (1870) ("[T]he court shall have the same powers to increase [damages and lost profits] in its

discretion that are given by this act to increase the damages found by verdicts in actions upon the case . ."). Explaining the change, this Court stated, "Courts could not, under [the act of 1836], augment the allowance made by the final decree [in actions in equity], as in the case of the verdict of a jury [in actions at law]; but the present patent act [of 1870] provides that the court shall have the same powers to increase the decree, in its discretion, that are given by the act to increase the damages found by verdicts in actions at law." *Birdsall v. Coolidge*, 93 U.S. 64, 69-70 (1876).

Throughout the 19th century, this Court repeatedly emphasized the inherent flexibility of the statutory power to increase damages under the 1836 and 1870 Patent Acts, and never limited that power solely to cases of willful infringement. *See Topliff v. Topliff*, 145 U.S. 156, 174 (1892) ("defendant ... made serious inroads upon their business, and sold almost exclusively to those who had formerly been customers of the plaintiffs"); *Tilghman v. Proctor*, 125 U.S. 136, 143-44 (1888) ("whenever the circumstances of the case appear to require it"); *Clark v. Wooster*, 119 U.S. 322, 326 (1886) ("expense and trouble the plaintiff has been put to by the defendant, and any special inconvenience he has suffered from the wrongful acts of the defendant"); *Teese v. Huntingdon*, 64 U.S. 2, 9 (1860) ("not acted in good faith, or has caused unnecessary expense and injury to the plaintiff"); *Dean v. Mason*, 61 U.S. 198, 203 (1858) ("where the wrong has been done, under aggravated circumstances"); *Seymour v. McCormick*, 57 U.S. 480, 488-89 (1853) ("committed to the discretion and judgment of the court"); *Day v.*

Woodworth, 54 U.S. 363, 372 (1851) ("not acted in good faith, or has been stubbornly litigious, or has caused unnecessary expense and trouble to the plaintiff").

In 1946—on the eve of America's post-World War II economic boom—Congress once again had an opportunity to narrow or eliminate the enhanced damages provision, and once again chose to maintain it. In fact, rather than curtail monetary awards in patent cases, Congress added "reasonable attorney's fees" as another monetary remedy in patent cases. Patent Act of 1946, Pub. L. No. 79-587, 60 Stat. 778. Explaining this addition, the 1946 Senate Report stated that "the discretion given the court in this respect, in addition to the *present discretion to award triple damages*, will discourage infringement of a patent by anyone thinking that all he would be required to pay if he loses the suit would be a royalty." S. Rep. No. 79-1503, at 2 (1946) (emphasis added).

Six years later, Congress recodified the enhanced damages and attorney's fees provisions as 35 U.S.C. § 284 (enhanced damages) and § 285 (attorney's fees). Notably, Congress added the phrase "in exceptional cases" to § 285, thereby placing some limit on the judicial discretion to award attorney's fees. But Congress added no such constraint on § 284, which remains in force to this day. The sole limit in § 284 is the numerical limit that damages may be increased "up to three times the amount found or assessed."

Today, America's single greatest competitive advantage—"charges for the use of intellectual property" (BEA REPORT, *supra*)—and America's single largest predictor of income—patents (FED REPORT, *supra*)—are tied directly to the new patent system that Congress enacted in 1836. Looking back, it can hardly be doubted that Congress accurately predicted that the patent system "will contribute largely to the great interests of the country, and bear no small part in elevating our national character." Senate Report Accompanying S. 239, 24th Cong., 1st Sess. (Apr. 28, 1836). Then, as today, "It is not at this day to be doubted that the evil of the temporary monopoly [of a patent] is greatly overbalanced by the good the community ultimately derives from its toleration." *Id.*

II. The Routine Denial Of Enhanced Damages Has Given Rise To Today's "Efficient Infringement" Problem

It is no coincidence that the two captioned cases, involving the same issue but different parties, have landed at this Court at the same time. The denial of enhanced damages in patent cases is now routine. For reversals by the Federal Circuit in just the last two years, see, e.g., *Carnegie Mellon Univ. v. Marvell Tech. Group*, 2015 U.S. App. LEXIS 13622, *42 (Fed. Cir. Aug. 4, 2015); *WesternGeco LLC v. Ion Geophysical Corp.*, 791 F.3d 1340, 1354 (Fed. Cir. 2015); *Global Traffic Techs., LLC v. Morgan*, 2015 U.S. App. LEXIS 9281, *20 (Fed. Cir. Jun. 4, 2015); *Innovention Toys, LLC v. MGA Entm't, Inc.*, 611 Fed. App'x 693, 701 (Fed. Cir. Apr. 29, 2015); *Stryker Corp. v. Zimmer, Inc.*, 782 F.3d 649, 662 (Fed. Cir.

2015); *Univ. of Pittsburgh of the Commonwealth Sys. of Higher Educ. v. Varian Med. Sys.*, 561 Fed. App'x 934, 945 (Fed. Cir. Apr. 10, 2014).

The fallout on business has now arrived. In the last two months alone, *The Wall Street Journal*, *The New York Times*, and *The Washington Post* have each published editorials capturing precisely the real-world dilemma that patent owners now face when asking a large company to take a license to their patent:

- "[B]ig companies can now largely ignore legitimate patent holders." Joe Nocera, Editorial, *The Patent Troll Smokescreen*, NEW YORK TIMES, Oct. 24, 2015, at A23;

- "The best way to deal with a patent demand may be to take a deep breath—and then do...nothing." Colleen Chien, Editorial, *The Best Way to Fight a Patent Demand May Be to Do Nothing*, WALL STREET JOURNAL, Nov. 23, 2015, at R5 (ellipses in original) (reporting that 22% of surveyed companies responded to patent demand letters by ignoring them); and

- Explaining that companies "prefer[] to infringe patents held by others and then settle in court when sued for infringement instead of simply paying modest (and mutually negotiated) licensing fees." John D. Wiley, Opinion, *Patent Infringement is Theft, Plain and Simple*, WASHINGTON POST, Nov. 17, 2015.

The new term for this practice is "*efficient infringement*." "That's the relatively new practice of

using a technology that infringes on someone's patent, while ignoring the patent holder entirely. And when the patent holder discovers the infringement and seeks recompense, the infringer responds by challenging the patent's validity." Nocera, *supra*, at A23. "Should a lawsuit ensue, the infringer, often a big tech company, has top-notch patent lawyers at the ready. Because the courts have largely robbed small inventors of their ability to seek an injunction [*see eBay Inc. v. MercExchange, LLC*, 547 U.S. 388 (2006),] the worst that can happen is that the infringer will have to pay some money." Nocera, *supra*, at A23.

The payment of "some money," referenced in the preceding sentence, is the statutory-minimum "reasonable royalty" under 35 U.S.C. § 284 in the majority of cases. This "reasonably royalty" is the same amount the infringer would have paid if it had taken a license for the patent in the first place. *See Powell v. Home Depot U.S.A., Inc.*, 663 F.3d 1221, 1238 (Fed. Cir. 2011) ("[T]he reasonable royalty must be based on the terms of a [hypothetical] licensing agreement reached . between the patentee and the infringer at the time infringement began.") (alteration in original; internal quotations omitted) (quoting *Rite-Hite Corp. v. Kelley Co.*, 56 F.3d 1538, 1554 (Fed. Cir. 1995) (en banc)).

The take-home message to infringers is clear: refuse a license from a small inventor, because—assuming you are sued, and assuming further that you lose—all you will pay in damages at the end of a lawsuit is the same "reasonable royalty" that you would have paid for the license in the first place.

Infringement under these circumstances is "efficient" because, as Professor Epstein explains, "an uncertain future damage action is worth far less than a prompt and secure license payment." Richard A. Epstein, *Intellectual Property and the Law of Contract: The Case Against "Efficient Breach"*, 9 EUROPEAN REVIEW OF CONTRACT LAW 345 (2013). *See also* Pat Choate, *Patent Theft as a Business Strategy*, HUFFINGTON POST, May 23, 2010 (explaining that infringers "calculate the benefits of stealing someone else's patented technology against the possibility of getting caught, tried in court and being forced to pay damages and penalties").

The current anti-patent climate harms small inventors most. *See* Choate, *supra* ("The principal victims of these big corporations' 'efficient infringement' approach are America's independent inventors, small businesses and universities...."). That is because small businesses rely on patents to protect their inventions more than large companies, and small businesses tend to focus on risky, emerging technologies more than large companies. According to an study commissioned by the Small Business Administration: (1) "Small businesses develop more patents per employee than larger businesses, with the smallest firms, those with fewer than 25 employees, producing the greatest number of patents per employee"; and (2) "small firms are much more likely to develop emerging technologies than are large firms." ANTHONY BREITZMAN & DIANA HICKS, AN ANALYSIS OF SMALL BUSINESS PATENTS BY INDUSTRY AND FIRM SIZE i, v (Nov. 2008).

Today's anti-patent climate, unfortunately, coincides with the lowest period of "startup density" in 35 years. (Startup density is defined as the ratio of the number of new employer businesses in the U.S. divided by the total population in the U.S.) The drop in startup density, triggered by the financial crisis of 2007-08, has not recovered even as the U.S. economy has improved. The drop also happens to coincide with, and persists under, this Court's 2006 *eBay* decision (denying automatic injunctive relief for patent owners) and the Federal Circuit's 2007 *Seagate* decision (engrafting a two-part objective/subjective willfulness requirement on enhanced damages), neither of which tends to encourage startup creation by firms that rely far more on patents than large firms.

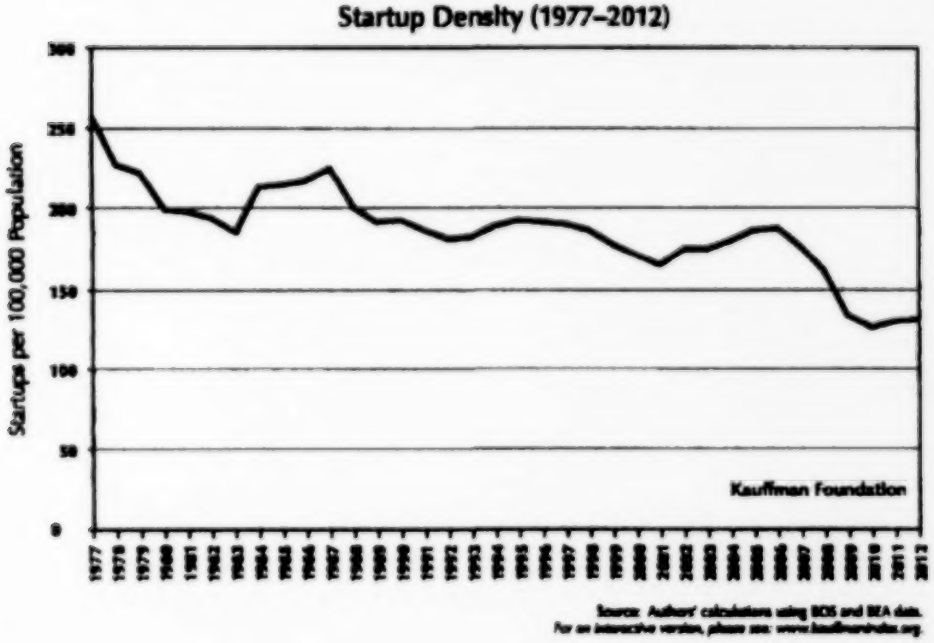

ROBERT W. FAIRLIE *ET AL.*, THE KAUFFMAN INDEX STARTUP ACTIVITY: NATIONAL TRENDS 2015, at 22.

Not only has the formation of new companies (births) slowed, the rate of firm failures (deaths) now exceeds births for the first time in 30-plus years.

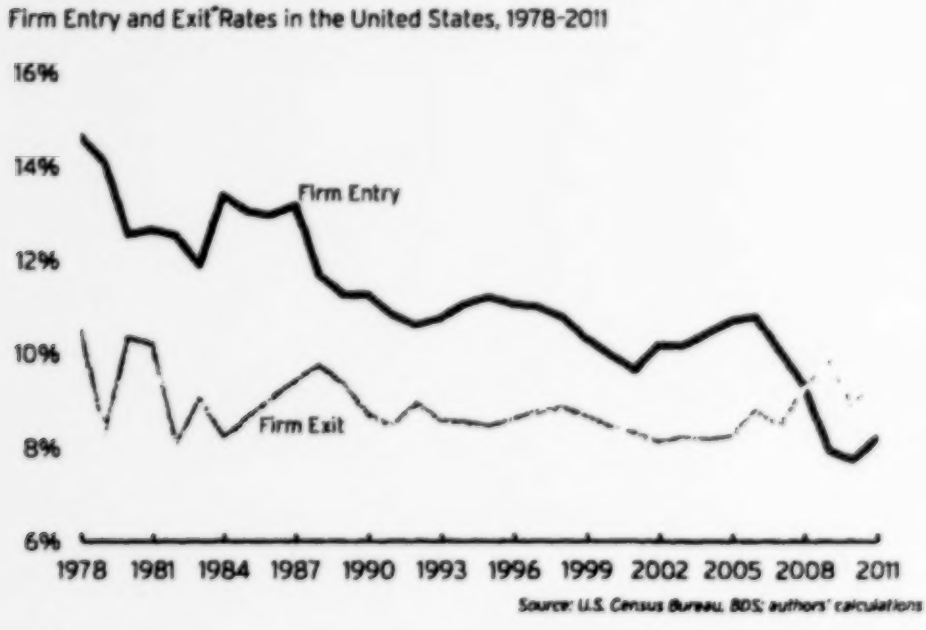

IAN HATHAWAY & ROBERT E. LITAN, *DECLINING BUSINESS DYNAMISM IN THE UNITED STATES: A LOOK AT STATES AND METROS*, BROOKINGS INSTITUTE, at 1 (May 2014). This same study found that small firms are hurt disproportionately: "older and larger businesses are doing better relative to younger and smaller ones." *Id.*

III. This Court Has Already Set Workable Guideposts For Deciding Whether To Increase Patent Damages

The Court in this case is not writing on a blank slate. The Court has already identified some of the wide-ranging "circumstances of the case" where a judge might choose to exercise her discretion to increase damages under the 1836 and 1870 Patent

Acts. *See Topliff v. Topliff*, 145 U.S. 156, 174 (1892); *Tilghman v. Proctor*, 125 U.S. 136, 143-44 (1888); *Clark v. Wooster*, 119 U.S. 322, 326 (1886); *Teese v. Huntingdon*, 64 U.S. 2, 9 (1860); *Dean v. Mason*, 61 U.S. 198, 203 (1858); *Seymour v. McCormick*, 57 U.S. 480, 488-89 (1853); *Day v. Woodworth*, 54 U.S. 363, 372 (1851). A leading contemporary treatise, ALBERT A. WALKER, TEXT-BOOK OF THE PATENT LAWS OF THE UNITED STATES OF AMERICA §§ 567-568 (2d ed. 1889), cited and summarized many of those early cases. Those cases set forth the following guideposts for district courts to apply when enhancing damages, and they remain appropriate today:

A. Loss of customers or market share

In *Topliff v. Topliff*, 145 U.S. 156, 174 (1892), the defendant, formerly "a travelling sales agent of the plaintiffs," "in 1882 opened a rival establishment, and began the infringement of [plaintiffs'] patents." The defendant "made serious inroads upon [plaintiffs'] business" and "sold almost exclusively to those who had formerly been customers of the plaintiffs." *Id.* "Under these circumstances," this Court explained, "we should not have disturbed the decree of the court below, if it had seen fit to increase the damages." *Id.* Importantly, the Court would have upheld the increased damages, despite the existence of an objectively reasonable invalidity defense: "the question of patentable novelty," according to the Court, "is by *no means free from doubt*." *Id.* at 164 (emphasis added). Nor was there any evidence that the defendant *knew* of the patents, which plaintiffs acquired in 1884—two years after the defendant left the plaintiffs' employ. *Id.* at 172.

Therefore, in this Court's view, neither the defendant's knowledge of the patent, nor the absence of a reasonable defense, would have been preconditions for enhancing damages in this case.

B. Failure to act in good faith

Twice this Court has stated that enhancement of damages is appropriate if "the defendant has not acted in good faith." *Teese v. Huntingdon*, 64 U.S. 2, 9 (1860); *Day v. Woodworth*, 54 U.S. 363, 372 (1851). *See* WALKER, *supra*, § 567 (same).

An obvious example of "not acting in good faith" is ignoring a patent owner's reasonable licensing offer, or delaying licensing negotiations in the hope that the patent owner will give up. *See* Chien, *supra*, at R5 (finding that "many companies resolve threats by simply filing them away," and recommending that companies "plead poverty" to convince the patent owner to go away).

Pleading poverty falsely, resisting the disclosure of financial information, and structuring a business to ensure that one's profits are beyond reach, are all indicia that the infringer has "not acted in good faith." *See Consolidated Rubber Tire Co. v. Diamond Rubber Co.*, 226 F. 455, 465 (D.N.Y. 1915) (Hand, J.) (enhancing patent damages by $50,000 due to the following factors: "[t]he organization of the Diamond Company of New York, its dissolution at the very expiration of the patent, the assuring that it should by no change have any profits to reach, the efforts to resist the disclosure of the Ohio Company's books, the deviousness throughout of its persistent effort to

suck the value from the invention and not pay the price").

C. Unnecessary expense, injury, or trouble

This Court twice has said that enhancement of damages is appropriate if the "expense," "injury," or "trouble" caused by the infringer was "*unnecessary*." *Teese*, 64 U.S. at 9 (emphasis added); *Day*, 54 U.S. at 372 (emphasis added). *See* WALKER, *supra*, § 567 (same).

Certainly, some fraction of patent infringement lawsuits today are an unnecessary burden on the courts, because a reasonable person in the infringer's position would have taken precautions, such as licensing or designing-around the patent, instead of proceeding headlong with its infringement. *Cf.* RESTATEMENT (THIRD) OF TORTS: PHYS. & EMOT. HARM, § 2 (2010) ("A person acts recklessly in engaging in conduct if: (a) the person knows of the risk of harm created by the conduct or knows facts that make the risk obvious to another in the person's situation, and (b) the *precaution that would eliminate or reduce the risk involves burdens that are so slight relative to the magnitude of the risk* as to render the person's failure to adopt the precaution a demonstration of the person's indifference to the risk.") (emphasis added).

In this regard, an infringer's failure to obtain an opinion of counsel is relevant, not to show that the infringement was "willful" (which is disallowed under 35 U.S.C. § 298), but to show that the "expense," "injury" or "trouble" to the patent owner

and court was avoidable and "unnecessary" under *Teese* and *Day*.

D. Any special inconvenience

In *Clark v. Wooster*, 119 U.S. 322, 326 (1886), this Court explained that "*any special inconvenience*" suffered by the plaintiff—apart from the ordinary "expense and trouble the plaintiff has been put to"—is properly the subject of "allowance by the court under the authority given to it to increase the damages." (emphasis added). Examples of "special inconveniences" may include out-of-court expenses and opportunity costs, such as business deals and productive work that the patent owner otherwise would have been pursued with the resources that it spent chasing down the recalcitrant infringer. Roger Smeets, *Hoisted By Your Own Petard: The Opportunity Cost Of Inventor Persistence In Patent Litigation*, ACAD. MGMT. PROC. (Jan. 2015) (finding, based on a sample of 285 serial inventor-patent owners, that patent litigation redirects resources and attention away from subsequent invention).

E. Stubbornly litigious infringer

This Court in *Day v. Woodworth*, 54 U.S. 363, 372 (1851) explained that enhancing damages is appropriate against a defendant who "has been stubbornly litigious." Large infringers, in particular, may try to exploit their asymmetric financial position against a small inventor by burying the plaintiff-inventor in litigation costs. *See, e.g., Kellogg v. Nike, Inc.*, 2009 U.S. Dist. LEXIS 90432, *35 (D. Neb. Sept. 30, 2009) ("The court finds that Nike's

conduct in asserting and pursuing the claim of invalidity was frivolous and was intended to delay the proceedings, obfuscate the issues and increase [individual inventor] Kellogg's costs of litigation."); Stephen H. Haber & Seth H. Werfel, *Why Do Inventors Sell to Patent Trolls? Experimental Evidence for the Asymmetry Hypothesis*, Hoover IP² Working Paper No. 15009 (Jan. 23, 2015) (experimentally confirming that "asymmetry in financial resources between individual patent holders and manufacturers prevents individuals from making a credible threat to litigate against infringement").

F. Making infringement unprofitable

As stated in the 1889 treatise by Walker, "Increased damages may properly be awarded by a court, where it is necessary to award them in order to prevent a defendant infringer from profiting from his own wrong, whether that wrong was intentional or was unwitting." WALKER, *supra*, § 567. This rationale was confirmed in the 1946 Senate Report, which explained that "the present discretion to award triple damages will discourage infringement of a patent by anyone thinking that all he would be required to pay if he loses the suit would be a royalty." S. Rep. No. 79-1503, at 2 (1946).

The Walker treatise gives the following explanation for the role of enhanced damages in making infringement unprofitable:

> The power conferred by the statute is general. It is not confined to awarding

> punitive damages, but is to be exercised "according to the circumstances of the case." Among the circumstances of patent cases, is the fact that the profits which defendants derive from their infringements, are often much larger than the actual damages which those infringements cause plaintiffs to sustain. If, in such a case, the defendant is forced to pay no more than the actual damages, it is clear that he will have derived advantage from his own wrong. It would be an imperfect system of law that would thus put a premium upon its own violation.

WALKER, *supra*, at § 567.

Under this rationale, Walker explains, the quintessential case for enhancing damages arises where (1) "no injunction happens to be proper," and (2) "the defendant's profits are larger than the plaintiff's damages." *Id.* In such a case, Walker explains, enhancing damages is "the only certain means of making infringement unprofitable to infringers." *Id.*

In other words, enhancing damages under these circumstances makes infringement less "efficient," and it changes the calculus of companies for whom it would otherwise be more profitable to infringe and litigate rather than to take a license. *See* Choate, *supra* (explaining that infringers "calculate the benefits of stealing someone else's patented technology against the possibility of getting caught, tried in court and being forced to pay damages and penalties").

CONCLUSION

For the foregoing reasons, the judgments of the court of appeals should be vacated and the cases remanded for further consideration of petitioners' enhanced damages requests.

Respectfully submitted,

ANDREW S. BALUCH
Counsel of Record
STEPHEN G. NAGY
Of Counsel
STRAIN & STRAIN PLLC
1455 Pennsylvania Ave., N.W.,
Suite 400
Washington, D.C. 20004
(202) 621 1872
andrew.baluch@strainpllc.com

Counsel for Amici Curiae

No. 14-1513

IN THE

Supreme Court of the United States

HALO ELECTRONICS, INC.,
Petitioner,

v.

PULSE ELECTRONICS, INC., *ET AL.*,
Respondents.

On Writ of Certiorari to the United States Court of Appeals for the Federal Circuit

BRIEF OF YAHOO! INC. AND ARTHREX, INC. AS *AMICI CURIAE* IN SUPPORT OF AFFIRMANCE

KEVIN T. KRAMER
Deputy General Counsel – Intellectual Property
YAHOO! INC.
701 First Ave.
Sunnyvale, CA 94089
Counsel for Yahoo! Inc.

JOHN W. SCHMIEDING
Vice President, General Counsel
ARTHREX, INC.
1370 Creekside Blvd.
Naples, FL 34108
Counsel for Arthrex, Inc.

JEFFREY A. LAMKEN
Counsel of Record
MICHAEL G. PATTILLO, JR.
JAMES A. BARTA
MOLOLAMKEN LLP
The Watergate, Suite 660
600 New Hampshire Ave., NW
Washington, D.C. 20037
(202) 556-2000
jlamken@mololamken.com

TUONGVY LE
MOLOLAMKEN LLP
540 Madison Ave.
New York, NY 10022
Counsel for Amici Curiae

WILSON-EPES PRINTING CO., INC. – (202) 789-0096 – WASHINGTON, D.C. 20002

QUESTIONS PRESENTED

This case concerns the threshold standard for awarding enhanced damages for patent infringement under 35 U.S.C. § 284. Specifically, it includes:

1. Whether enhanced damages are available only in cases of "willful"—*i.e.*, knowing or reckless—infringement, or are instead available for instances of egregious misconduct (such as malicious conduct undertaken with intent to injure others).

2. Whether a plaintiff may obtain enhanced damages under a theory of "willful infringement" where the defendant's conduct was non-infringing under an objectively reasonable construction of the patent claims.

TABLE OF CONTENTS

	Page
Interest of *Amici Curiae*	1
Introduction and Summary of Argument	2
Argument	5
I. Enhanced Damages Have Long Been Reserved for Egregious Misconduct	6
A. Common-Law Principles Confine Multiple-Damages Awards to Willful, Wanton, or Egregious Conduct	6
B. The Patent Act Reflects Common-Law Restrictions on Enhanced Damages	7
C. The Federal Circuit's Sole Focus on "Willful Infringement" Is Misguided	10
II. The Federal Circuit's Current Formulation of the Standard for Willful Infringement Is Correct	13
A. This Court's Decision in *Safeco* Establishes the Standard for "Willfulness"	13
B. The Federal Circuit Properly Adopted the *Safeco* Standard	15
C. This Court Should Reject Efforts To Convert *Safeco*'s Objective Standard Into an Inquiry Into Past Subjective Beliefs	18
D. Adherence to *Safeco*'s Objective-Unreasonableness Threshold Is Critical to the Proper Functioning of the Patent System	23

TABLE OF CONTENTS—Continued

Page

1. An Objective-Unreasonableness Threshold Promotes the Patent System's Purposes—To Disseminate Knowledge and Spur Innovation 23
2. An Objective-Unreasonableness Threshold Helps To Stem the Flood of Enhanced-Damages Awards 28
3. An Objective-Unreasonableness Threshold Helps To Mitigate Forum Shopping 29

III. The Federal Circuit Correctly Denied Enhanced Damages Here 31

Conclusion 34

TABLE OF AUTHORITIES

Page(s)

CASES

Advanced Fiber Techs. (AFT) Tr. v. *J&L Fiber Servs., Inc.*, 674 F.3d 1365 (Fed. Cir. 2012) 27

Aro Mfg. Co. v. *Convertible Top Replacement Co.*, 377 U.S. 476 (1964) 9

B.F. Goodrich Co. v. *Consol. Rubber Tire Co.*, 251 F. 617 (7th Cir. 1918) 8

Bard Peripheral Vascular, Inc. v. *W.L. Gore & Assocs., Inc.*, 682 F.3d 1003 (Fed. Cir. 2012) 16, 27, 30

Beatrice Foods Co. v. *New Eng. Printing & Lithographing Co.*, 923 F.2d 1576 (Fed. Cir. 1991) 10

Bonito Boats, Inc. v. *Thunder Craft Boats, Inc.*, 489 U.S. 141 (1989) 24

Brenner v. *Manson*, 383 U.S. 519 (1966) 23

Cheek v. *United States*, 498 U.S. 192 (1991) 18, 30

Copease Mfg. Co. v. *Am. Photocopy Equip. Co.*, 298 F.2d 772 (7th Cir. 1961) 9

Corning v. *Burden*, 56 U.S. (15 How.) 252 (1853) 8

Coryell v. *Colbaugh*, 1 N.J.L. 77 (1791) 6, 7

Crawford-El v. *Britton*, 523 U.S. 574 (1998) 26

Day v. *Woodworth*, 54 U.S. (13 How.) 363 (1851) 8

Dean v. *Mason*, 61 U.S. (20 How.) 198 (1858) 8

TABLE OF AUTHORITIES—Continued

Page(s)

E-I-M Co. v. *Phila. Gear Works*, 223 F.2d 36 (5th Cir. 1955) 9

eBay Inc. v. *MercExchange, LLC*, 547 U.S. 388 (2006) 18

Exxon Shipping Co. v. *Baker*, 554 U.S. 471 (2008) 6

Farmer v. *Brennan*, 511 U.S. 825 (1994) 14, 20

Forest Grove Sch. Dist. v. *T.A.*, 557 U.S. 230 (2009) 9

Genay v. *Norris*, 1 S.C.L. 6 (1784) 7

Global-Tech Appliances, Inc. v. *SEB S.A.*, 131 S. Ct. 2060 (2011) 20

Harlow v. *Fitzgerald*, 457 U.S. 800 (1982) 26, 27, 29

Hogg v. *Emerson*, 52 U.S. (11 How.) 587 (1850) 8

Jurgens v. *CBK, Ltd.*, 80 F.3d 1566 (Fed. Cir. 1996) 2, 10, 11, 12, 13

Kingsley v. *Hendrickson*, 135 S. Ct. 2466 (2015) 21

Markman v. *Westview Instruments, Inc.*, 517 U.S. 370 (1996) 21

Milgo Elec. Corp. v. *United Bus. Commc'ns, Inc.*, 623 F.2d 645 (10th Cir. 1980) 33

Ornelas v. *United States*, 517 U.S. 690 (1996) 30

Pac. Mut. Life Ins. Co. v. *Haslip*, 499 U.S. 1 (1991) 7

TABLE OF AUTHORITIES—Continued

Page(s)

Pfaff v. *Wells Elecs., Inc.*, 525 U.S. 55 (1998) 23, 25

Plumley v. *Mockett*, 836 F. Supp. 2d 1053 (C.D. Cal. 2010) 27

Powell v. *Home Depot U.S.A., Inc.*, 663 F.3d 1221 (Fed. Cir. 2011) 16, 32

Power Specialty Co. v. *Conn. Light & Power Co.*, 80 F.2d 874 (2d Cir. 1936) 8

Read Corp. v. *Portec, Inc.*, 970 F.2d 816 (Fed. Cir. 1992) 11

Reed v. *Davis*, 21 Mass. 216 (1826) 7

Rompilla v. *Beard*, 545 U.S. 374 (2005) 21

Russell Box Co. v. *Grant Paper Box Co.*, 203 F.2d 177 (1st Cir. 1953) 10

Safeco Ins. Co. of Am. v. *Burr*, 551 U.S. 47 (2007) ..... *passim*

Scott Paper Co. v. *Marcalus Mfg. Co.*, 326 U.S. 249 (1945) 24

In re Seagate Tech., LLC, 497 F.3d 1360 (Fed. Cir. 2007) (en banc), cert. denied, 552 U.S. 1230 (2008) ..... *passim*

Sears, Roebuck & Co. v. *Stiffel Co.*, 376 U.S. 225 (1964) 33

Seymour v. *McCormick*, 57 U.S. (16 How.) 480 (1854) 7, 8, 31

Slimfold Mfg. Co. v. *Kinkead Indus., Inc.*, 932 F.2d 1453 (Fed. Cir. 1991) 24

TABLE OF AUTHORITIES—Continued

Page(s)

Spine Sols., Inc. v. *Medtronic Sofamor Danek USA, Inc.*, 620 F.3d 1305 (Fed. Cir. 2010) 16

State Indus., Inc. v. *A.O. Smith Corp.*, 751 F.2d 1226 (Fed. Cir. 1985) 24

Tarkus Imaging, Inc. v. *Adobe Sys., Inc.*, 867 F. Supp. 2d 534 (D. Del. 2012) 27

Topliff v. *Topliff*, 145 U.S. 156 (1892) 8

Uniloc USA, Inc. v. *Microsoft Corp.*, 632 F.3d 1292 (Fed. Cir. 2011) 16

W.S. Godwin Co. v. *Int'l Steel Tie Co.*, 29 F.2d 476 (6th Cir. 1928) 9

Weston Elec. Instrument Co. v. *Empire Elec. Instrument Co.*, 155 F. 301 (C.C.S.D.N.Y. 1907) 9

Yarway Corp. v. *Eur-Control USA, Inc.*, 775 F.2d 268 (Fed. Cir. 1985) 10

CONSTITUTIONAL PROVISIONS AND STATUTES

U.S. Const. Art. I 23

Leahy-Smith America Invents Act, Pub. L. No. 112-29, 125 Stat. 284 ..... 22, 27

35 U.S.C. § 298 22

Patent Act of 1793, ch. 11, § 5, 1 Stat. 322 7

Patent Act of 1800, ch. 25, § 3, 2 Stat. 38 7

Patent Act of 1836, ch. 357, § 14, 5 Stat. 123 7

Patent Act of 1870, ch. 230, 16 Stat. 198:

§ 55, 16 Stat. 206 8

§ 59, 16 Stat. 207 8

TABLE OF AUTHORITIES—Continued

Page(s)

Patent Act of 1952, Pub. L. No. 82-593, 66 Stat. 792 ..... 9, 27

35 U.S.C. § 112 23

35 U.S.C. § 284 ..... *passim*

OTHER AUTHORITIES

American Intellectual Property Law Ass'n, *Report of the Economic Survey 2013* (July 2013) 22

FTC, *To Promote Innovation: The Proper Balance of Competition and Patent Law and Policy* (Oct. 2003) 25

W. Page Keeton et al., *Prosser and Keeton on Torts* (5th ed. 1984) 6

Mark A. Lemley, *Ignoring Patents*, 2008 Mich. St. L. Rev. 19 (2008) 24

Yan Leychkis, *Of Fire Ants and Claim Construction: An Empirical Study of the Meteoric Rise of the Eastern District of Texas as a Preeminent Forum for Patent Litigation*, 9 Yale J.L. & Tech. 193 (2007) 30

J. Shawn McGrath & Kathleen M. Kedrowski, *Damages Trends in Patent and Lanham Act Cases*, http://goo.gl/ugt5TC 26

PricewaterhouseCoopers, *2015 Patent Litigation Study* (May 2015) 29, 30

Richard B. Racine & Michele C. Bosch, *Willful Infringement: A Real Concern*, 3 Fed. Cir. B.J. 409 (1993) 26

TABLE OF AUTHORITIES—Continued

Page(s)

Restatement (Second) of Torts (1965)..... 34

1 Joseph Sayer, *The Law of Damages* (1792)..... 6

Christopher B. Seaman, *Willful Patent Infringement and Enhanced Damages After* In re Seagate: *An Empirical Study*, 97 Iowa L. Rev. 417 (2012)..... 28, 29, 30

Theodore Sedgwick, *A Treatise on the Measure of Damages, or an Inquiry Into the Principles Which Govern the Amount of Compensation Recovered in Suits at Law* (1847)..... 6

Theodore Sedgwick, *A Treatise on the Measure of Damages, or an Inquiry Into the Principles Which Govern the Amount of Pecuniary Compensation Awarded by Courts of Justice* (9th ed. 1912)..... 6

IN THE

Supreme Court of the United States

NO. 14-1513

HALO ELECTRONICS, INC.,

Petitioner,

v.

PULSE ELECTRONICS, INC., *ET AL.*,

Respondents.

On Writ of Certiorari to the United States Court of Appeals for the Federal Circuit

---

BRIEF OF YAHOO! INC. AND ARTHREX, INC. AS *AMICI CURIAE* IN SUPPORT OF AFFIRMANCE

INTEREST OF *AMICI CURIAE*[1]

Yahoo! Inc. is a global technology company that operates one of the most frequently visited sites on the Internet. Throughout its 20-year history, Yahoo has

---

[1] Pursuant to Supreme Court Rule 37.6, counsel for *amici curiae* states that no counsel for a party authored this brief in whole or in part or made a monetary contribution to the preparation and submission of this brief, and no person other than *amici* or their counsel made such a contribution. Pursuant to Supreme Court Rule 37.3, counsel for *amici curiae* represents that all parties to this case have filed letters with the Clerk granting blanket consent to the filing of *amicus curiae* briefs in support of either or neither party.

been a leader in technologies that inform, connect, and entertain users of the World Wide Web.

Arthrex, Inc. is a global medical device company whose mission is to help surgeons better treat their patients. Arthrex is a pioneer in the field of arthroscopy, having developed more than 8,500 innovative products and surgical procedures to advance minimally invasive orthopedics.

Amici are leading innovators in very different fields. But they share important concerns about the proper operation of the Nation's patent laws. *Amici* make major investments in research and development, and they seek patents to protect their innovations. Yahoo has over 2,000 issued U.S. patents. Arthrex has over 315 issued U.S. patents, and approximately 1,100 patents and patent applications worldwide. At the same time, *amici* are frequent targets of patent infringement suits. *Amici* thus have balanced insights on, and experience with, the question presented here, which concerns the proper standard for awarding enhanced damages for patent infringement under § 284.

INTRODUCTION AND SUMMARY OF ARGUMENT

While the question presented has been formulated various ways, the issue before the Court is broad—the threshold standard for awarding enhanced damages under 35 U.S.C. § 284. The Federal Circuit has for years held that enhanced damages requires "willful infringement." See *Jurgens* v. *CBK, Ltd.*, 80 F.3d 1566, 1570 (Fed. Cir. 1996). And in *In re Seagate Technology, LLC*, 497 F.3d 1360 (Fed. Cir. 2007) (en banc), cert. denied, 552 U.S. 1230 (2008), the Federal Circuit adopted a framework for willfulness that requires the patentee to show that the "infringer acted despite an *objectively* high

likelihood that its actions constituted infringement of a valid patent." *Id.* at 1371 (emphasis added).

The Federal Circuit erred in confining enhanced damages to cases of "willful infringement." Historical practice counsels against limiting multiple damages solely to instances of willfulness. Rather, such damages should be available for other egregious misconduct, such as conduct undertaken with a malicious intent to injure others.

Typically, however, plaintiffs seek enhanced damages *not* for malicious conduct, but on the assertion that infringement was "willful." For such run-of-the-mine cases, *Seagate*'s "objective unreasonableness" standard is correct. Indeed, the standard directly implements this Court's teachings regarding "willfulness" in *Safeco Insurance Co. of America* v. *Burr*, 551 U.S. 47 (2007). The Court should retain that objective-unreasonableness standard in cases involving "willfulness," even if that is not a threshold requirement for *all* enhanced-damages cases.

I. At common law, enhanced damages were limited to cases involving wanton or malicious misconduct—in essence criminal conduct. They were reserved for the most egregious cases.

Similar standards governed enhanced damages under the early Patent Acts. In those statutes, Congress gave federal courts discretion to award up to three times the amount of compensatory damages in patent infringement suits. Consistent with common-law principles, enhanced damages were available in—but limited to—cases involving egregious misconduct.

That historical practice should inform the scope of the current enhanced-damages provision, § 284. Enhanced

damages should not be limited to "willful infringement." But they should extend only to the worst offenses.

II. While the Federal Circuit's standard focuses too narrowly on "willfulness," the standard it announced in *Seagate* should control where the plaintiff *does* pursue a willful-infringement theory. That standard—which requires a plaintiff to show that the defendant did not have *objectively reasonable* defenses to patent infringement—provides the correct framework for such claims. Neither petitioner nor the government denies that *Seagate*'s objective-unreasonableness standard is grounded in—indeed, required by—this Court's teachings in *Safeco* regarding the meaning of "willfulness."

III. Requiring a showing of objective unreasonableness for enhanced-damages claims based on "willful" infringement is essential to the proper functioning of the patent system.

That system embodies a bargain, in which a patentee receives an exclusive right to practice an invention for a period of years in exchange for the patentee's disclosure of her discovery. Those disclosures are intended to disseminate knowledge and spur further innovation by others. Yet many companies ignore the knowledge disclosed in patents, for fear that—if they read patents—they will subject themselves to willfulness claims on the ground that they "knew" they were infringing a patent. An objective threshold provides some comfort that companies will be judged based on objective criteria, rather than a jury's speculation that an engineer who reviewed a patent subjectively believed his company's product would infringe.

An objective-unreasonableness standard helps ensure enhanced-damages awards are sought only in appropri-

ate cases. Before *Seagate*, plaintiffs routinely sought enhanced damages regardless of the facts. Since the Federal Circuit implemented *Seagate*'s objective-reasonableness standard, the number of cases in which enhanced damages are actually awarded has been more appropriately limited.

Forum shopping is rampant in patent suits, in part because juries in certain districts are more likely to recommend enhanced damages than in others. Because objective reasonableness—unlike subjective intent—is a legal issue reviewed *de novo*, such a standard gives courts greater ability to impose a uniform, nationwide standard for enhanced damages so that similar cases are treated similarly. That helps eliminate forum shopping, and promotes responsible pre-suit discussion between the parties.

IV. The Federal Circuit correctly denied enhanced damages in this case. Petitioner did not produce evidence that respondents acted with the type of "wanton" or "malicious" misconduct that could itself warrant enhanced damages. And the court correctly held that enhanced damages were not available under a willful-infringement theory, because respondents had objectively reasonable defenses to the claim of patent infringement.

ARGUMENT

The Federal Circuit's current requirement of willful infringement is too narrow. Contrary to more than a century of practice, the test ignores maliciousness and other egregious misconduct for which enhanced damages traditionally have been available. For willful-infringement claims, however, the test correctly applies this Court's teachings in *Safeco Insurance Co. of America* v. *Burr*, 551 U.S. 47 (2007). This Court should reject the

effort to dilute the standard by which willfulness is determined.

I. Enhanced Damages Have Long Been Reserved For Egregious Misconduct

A. Common-Law Principles Confine Multiple-Damages Awards to Willful, Wanton, or Egregious Conduct

The primary purpose of damages has long been compensation. 1 Theodore Sedgwick, *A Treatise on the Measure of Damages, or an Inquiry Into the Principles Which Govern the Amount of Pecuniary Compensation Awarded by Courts of Justice* §29 (9th ed. 1912) ("*1912 Treatise*"); see also W. Page Keeton et al., *Prosser and Keeton on Torts* §1 (5th ed. 1984). Actual damages thus are the presumptive tort remedy. Sedgwick, *supra*, §29; 1 Joseph Sayer, *The Law of Damages* 242 (1792). Departures from that standard are rare. See Keeton, *supra*, §2.

Enhanced damages—such as punitive and exemplary damages—are traditionally reserved for particularly egregious conduct. "Early common law cases" allowed "exemplary damages" to be awarded as "punishment for extraordinary wrongdoing," *Exxon Shipping Co.* v. *Baker*, 554 U.S. 471, 491 (2008), and to deter "the most atrocious" acts, *Coryell* v. *Colbaugh*, 1 N.J.L. 77, 77 (1791). For example, in 18th-century England, "fraud, malice, gross negligence, or oppression" was necessary for enhanced damages. Theodore Sedgwick, *A Treatise on the Measure of Damages, or an Inquiry Into the Principles Which Govern the Amount of Compensation Recovered in Suits at Law* 38 (1847). Similarly, after the Founding, 19th-century American courts limited enhanced damages to instances of "gross fraud, wantonness, malice or oppression." Sedgwick, *1912 Treatise*, *supra*,

§347. Archetypal cases involved acts such as intentional poisonings, *Genay* v. *Norris*, 1 S.C.L. 6 (1784), seducing a woman and breaking a promise to marry her, *Coryell*, 1 N.J.L. at 77-78, and unlawfully evicting a tenant who had an infant and whose wife lacked adequate clothing, *Reed* v. *Davis*, 21 Mass. 216 (1826). Enhanced- and exemplary-damages awards thus were "rarely assessed and likely to be small in amount." *Pac. Mut. Life Ins. Co.* v. *Haslip*, 499 U.S. 1, 61 (1991) (O'Connor, J., dissenting) (quotation marks omitted).

B. The Patent Act Reflects Common-Law Restrictions on Enhanced Damages

1. Congress acted against that common-law backdrop when it authorized enhanced damages in patent infringement cases. The earliest Patent Acts mandated treble damages for infringement. See Patent Act of 1793, ch. 11, §5, 1 Stat. 322; Patent Act of 1800, ch. 25, §3, 2 Stat. 38. But that rule inflicted a "great injustice" by treating "equally * * * all cases, without regard to their particular merits." *Seymour* v. *McCormick*, 57 U.S. (16 How.) 480, 488 (1854). In 1836, Congress made enhanced damages discretionary. It required courts to award actual damages, but authorized up to treble damages "according to the circumstances of the case." Patent Act of 1836, ch. 357, § 14, 5 Stat. 123.

Informed by common-law principles, courts rarely awarded enhanced damages under the 1836 Patent Act. In *Seymour* v. *McCormick*, 57 U.S. (16 How.) 480 (1854), this Court explained that, as a general matter, "there is no good reason why taking a man's property in an invention should be trebly punished, while the measure of damages as to other property is single and actual damages." *Id.* at 488-489. Other decisions emphasized that enhanced damages are for "aggravated circumstances."

Dean v. *Mason*, 61 U.S. (20 How.) 198, 203 (1858). As this Court explained, enhanced damages are reserved for cases where an "injury is wanton or malicious," *Seymour*, 57 U.S. (16 How.) at 489, or where a "defendant has not acted in good faith, or has been stubbornly litigious, or has caused unnecessary expense and trouble to the plaintiff," *Day* v. *Woodworth*, 54 U.S. (13 How.) 363, 372 (1851). Conversely, a defendant who was "not a wanton infringer" could not be subjected to the same "harsh rule of [treble] damages which might be justly inflicted on a mere pirate." *Corning* v. *Burden*, 56 U.S. (15 How.) 252, 271 (1853); see also *Hogg* v. *Emerson*, 52 U.S. (11 How.) 587, 607 (1850).

In 1870, Congress reaffirmed that district courts could award treble damages "according to the circumstances of the case." Patent Act of 1870, ch. 230, §59, 16 Stat. 207 (actions at law); *id.* §55, 16 Stat. 206 (actions in equity). The cases under the 1870 Patent Act followed the same pattern. This Court, for example, affirmed that enhanced damages were appropriate in cases where malice or intent to injure the plaintiff was apparent. Enhanced damages would be proper, it observed, where a person learns of a patented product while working for a company, opens a rival business, and starts selling infringing products to his former employer's customers. See *Topliff* v. *Topliff*, 145 U.S. 156, 174 (1892).

Lower courts likewise were reluctant to award enhanced damages, limiting recovery to cases involving "willfulness, malice, and a wanton disregard of the rights of the patentee." *B.F. Goodrich Co.* v. *Consol. Rubber Tire Co.*, 251 F. 617, 624 (7th Cir. 1918); see also *Power Specialty Co.* v. *Conn. Light & Power Co.*, 80 F.2d 874, 878 (2d Cir. 1936). Particularly obstructionist litigation conduct or deceptive concealment of infringement might

also justify enhanced damages. See *W.S. Godwin Co.* v. *Int'l Steel Tie Co.*, 29 F.2d 476, 478 (6th Cir. 1928); *Weston Elec. Instrument Co.* v. *Empire Elec. Instrument Co.*, 155 F. 301, 301 (C.C.S.D.N.Y. 1907).

2. Congress enacted the current law—the Patent Act of 1952—against that historical practice. Pub. L. No. 82-593, 66 Stat. 792. The current Act—which "merely" consolidated and "clarif[ied]" existing damages rules, *Aro Mfg. Co.* v. *Convertible Top Replacement Co.*, 377 U.S. 476, 505 n.20 (1964)—mandated actual damages for infringement. 35 U.S.C. §284. But it also retained a provision for enhanced damages: Under §284, a district "court may increase the damages up to three times the amount found or assessed." Underscoring the link to common-law principles, this Court has referred to §284 as a "punitive * * * damages" provision. *Aro Mfg.*, 377 U.S. at 508.

Section 284 offers no express standard for enhanced damages. But Congress's reaffirmation of judicial authority to award enhanced damages, without providing a new standard, represented an implicit approval of existing standards. See *Forest Grove Sch. Dist.* v. *T.A.*, 557 U.S. 230, 239-240 (2009). And for many years after §284's enactment, courts continued to apply the same standard they had applied under the 1836 and 1870 Patent Acts. In *Aro Manufacturing*, for example, this Court characterized enhanced damages as a remedy that would not be available absent "willful or bad-faith infringement." 377 U.S. at 508. Lower courts similarly described enhanced damages as appropriate for "willful," "deliberate," or "wanton" infringement. *Copease Mfg. Co.* v. *Am. Photocopy Equip. Co.*, 298 F.2d 772, 783 (7th Cir. 1961); *E-I-M Co.* v. *Phila. Gear Works*, 223 F.2d 36, 42 (5th Cir. 1955). Egregious litigation conduct, or de-

ceptive acts such as the destruction of records, also could sometimes justify enhanced damages. See *Russell Box Co.* v. *Grant Paper Box Co.*, 203 F.2d 177, 183 (1st Cir. 1953).

C. The Federal Circuit's Sole Focus on "Willful Infringement" Is Misguided

Section 284 should be interpreted consistent with that historical practice. Shortly after the Federal Circuit's inception in 1982, it appeared poised to follow that course. The court identified a variety of circumstances that might justify multiple damages, while recognizing that such an award would be inappropriate except in the most egregious circumstances. See, *e.g.*, *Yarway Corp.* v. *Eur-Control USA, Inc.*, 775 F.2d 268, 277 (Fed. Cir. 1985); see also *Beatrice Foods Co.* v. *New Eng. Printing & Lithographing Co.*, 923 F.2d 1576, 1579 (Fed. Cir. 1991).

Eventually, however, the Federal Circuit reduced that standard to a single element. In *Jurgens* v. *CBK, Ltd.*, 80 F.3d 1566 (Fed. Cir. 1996), the Federal Circuit ruled that enhanced damages should be available *only* for "willful infringement." At the same time, however, *Jurgens* articulated a standard of willfulness that amounted to mere negligence. *Jurgens* began by acknowledging that, "[b]ecause increased damages are punitive," their imposition requires "some degree of culpability." *Id.* at 1570. Either "willful infringement" or "bad faith" were considered sufficient. *Ibid.* But *Jurgens* opined that "the term 'bad faith' has numerous patent law applications," and that "[o]nly some of these are relevant in determining the predicate culpability for an increased damages award." *Ibid.* Ultimately, *Jurgens* concluded that, in this context, "bad faith" is *coextensive* with "willful infringement." See *id.* at 1571.

Having distilled away every basis for enhanced damages other than "willful infringement," *Jurgens* then defined "willfulness" expansively. For years, the Federal Circuit had held that "[o]ne who has actual notice of another's patent rights has an affirmative duty to respect those rights." *Read Corp.* v. *Portec, Inc.*, 970 F.2d 816, 828 (Fed. Cir. 1992). "That affirmative duty," in the court's view, "normally entails obtaining advice of legal counsel" that the patent is invalid or the conduct is non-infringing. *Ibid.* In *Jurgens*, the Federal Circuit tied that "affirmative duty" to willfulness. It held that, "in the initial determination of culpability" for increased damages, "'bad faith' properly refers to an infringer's failure to meet his affirmative duty to use due care" to "investigate and determine, in good faith, that he possesses reasonable defenses to an accusation of patent infringement." 80 F.3d at 1571. It thus declared, "'[B]ad faith' is more correctly called 'bad faith infringement,' and *it is merely a type of willful infringement.*" *Ibid.* (emphasis added).

Jurgens thus established a standard that was simultaneously over- and under-inclusive. It was under-inclusive because it ignored facts like malice and "motivation for harm" that were traditionally relevant to multiple damages. See *Read*, 970 F.2d at 827. Under *Jurgens*, the Federal Circuit held that such factors are relevant only "in determining whether or *how much to increase* a damages award" *after* willful infringement was established. 80 F.3d at 1571 (emphasis added). That mis-step cannot be reconciled with longstanding, pre-*Jurgens* enhanced-damages precedent. Those cases recognized that an array of conduct—so long as it was truly reprehensible—could justify enhanced damages. See pp. 7-10, *supra*. The court's effort to alter the ordinary re-

quirements for enhanced damages to create a patent-specific formula was mistaken.

At the same time, *Jurgens*' conception of "willfulness" was unacceptably broad. As explained below, willfulness is a demanding standard. But *Jurgens* equated willful infringement with failure to conduct a "good faith" investigation—a "duty to use due care"—to ensure the conduct is not infringing. See 80 F.3d at 1571. That, however, is *not* willfulness. It is, at worst, negligence.

The result of those errors was predictable. The Federal Circuit's expansive view of willfulness led to a flood of enhanced-damages demands and awards for relatively unaggravated infringement. Recognizing it had diluted willfulness to "a lower threshold" that was "akin to negligence," the Federal Circuit eventually reconsidered the issue en banc in *In re Seagate Technology, LLC*, 497 F.3d 1360 (Fed. Cir. 2007), and reinvigorated the willfulness standard. But the Federal Circuit did not consider whether *Jurgens* had erred in reducing the standard for enhanced damages to the consideration of willfulness standing alone.

This Court should correct the consequences of that zig-zag course. For the reasons given above, the Federal Circuit was wrong to exclude all bases for enhanced damages other than willful infringement. Nevertheless, the vast majority of enhanced-damages claims likely will be claims of willful infringement. And, for the reasons given below, the Federal Circuit's *Seagate* decision got the willfulness standard exactly right.

II. THE FEDERAL CIRCUIT'S CURRENT FORMULATION OF THE STANDARD FOR WILLFUL INFRINGEMENT IS CORRECT

While the Federal Circuit erred in precluding enhanced damages for egregious or malicious misconduct, establishing willful infringement as the sole basis for such damages awards, the vast majority of enhanced-damages claims are based on allegations of willful infringement. And, for cases alleging willful infringement, the standard the Federal Circuit adopted in *In re Seagate Technology, LLC*, 497 F.3d 1360 (Fed. Cir. 2007)—which requires the plaintiff to show that the defendant did not have *objectively reasonable* defenses—is correct. It properly evaluates, follows, and implements a controlling precedent of this Court—*Safeco Insurance Co. of America* v. *Burr*, 551 U.S. 47 (2007).

A. This Court's Decision in *Safeco* Establishes the Standard for "Willfulness"

Because *Jurgens* had diluted willfulness to "a lower threshold" that was "akin to negligence," the Federal Circuit found itself inundated with unmeritorious claims for enhanced damages. *Seagate*, 497 F.3d at 1371. In *Seagate*, the Federal Circuit went en banc to realign its definition of willfulness with the standard this Court, and many others, had articulated in comparable circumstances. In particular, the Federal Circuit recognized that this Court had "addressed the meaning of willfulness as a statutory condition of civil liability for punitive damages" in *Safeco*. *Id.* at 1370. The Federal Circuit appropriately looked to *Safeco*'s teachings regarding "willfulness" in defining the framework for enhanced-damages claims under §284 based on willful patent infringement.

Safeco concerned whether the defendant was liable under the Fair Credit Reporting Act, which imposes civil liability on defendants for "willful[ ]" violations. 551 U.S. at 52. Willfulness, this Court explained, covers both "knowing" and "reckless" actions. *Id.* at 57. In the civil context, recklessness is defined as "conduct violating an *objective* standard: action entailing 'an unjustifiably high risk of harm that is either known or so obvious that it should be known.'" *Id.* at 68 (quoting *Farmer* v. *Brennan*, 511 U.S. 825, 836 (1994)) (emphasis added). This Court held that, to establish a "willful" violation, the plaintiff had to prove that the defendant knew, or recklessly disregarded, "an unjustifiably high risk" that its conduct violated the statute. That "objective" standard, the Court held, could not be met if the defendant's conduct was consistent with an "objectively reasonable"—even if mistaken—construction of legal requirements, regardless of the defendant's subjective beliefs. *Id.* at 68-69, 70 n.20. Thus, regardless of claims regarding the defendant's subjective mental state, compliance with an objectively reasonable construction foreclosed liability for "willful" violations.

This Court applied that standard to the case before it. One of the central disputes in *Safeco* was the meaning of certain FCRA provisions regarding notices to consumers who had been subjected to adverse actions based on information in a credit report. 551 U.S. at 52, 61-67. The district court had accepted the defendant's construction of that provision and granted summary judgment in its favor; the challenged conduct did not violate the FCRA under that construction. *Id.* at 55. This Court disagreed with that construction of the FCRA and ruled that, under the correct construction, the defendant may have violated the statute. *Id.* at 67-68.

The Court, however, held that it was "clear enough that if [the defendant] did violate the statute, the company was not reckless." 551 U.S. at 68. Although the Court "disagree[d] with [the defendant's] analysis" of the statute, it "recognize[d] that [the defendant's] reading ha[d] a foundation in the statutory text, and a sufficiently convincing justification to have persuaded the District Court to adopt it and rule in [the defendant's] favor." *Id.* at 69-70 (citation omitted). Thus, while the defendant's construction of the FCRA was "erroneous," it "was not objectively unreasonable." *Id.* at 69. And because the defendant's "reading was not objectively unreasonable," the Court held, it "falls well short of raising the 'unjustifiably high risk' of violating the statute necessary for reckless liability"—and, hence, willfulness—as a matter of law. *Id.* at 70.

Safeco rejected as "unsound" the contention that evidence of the defendant's "subjective" beliefs "must be taken into account in determining whether a company acted knowingly or recklessly," even if the defendant's construction was "objectively reasonable." 551 U.S. at 70 n.20. The Court explained that, where circumstances "allow for more than one reasonable interpretation, it would defy history and current thinking to treat a defendant who merely adopts one such interpretation as a *knowing or reckless* violator," "whatever [its] subjective intent may have been." *Ibid.* (emphasis added).

B. The Federal Circuit Properly Adopted the *Safeco* Standard

In *Seagate*, the Federal Circuit applied *Safeco*'s teachings regarding "willfulness" to establish the framework for claims of "willful infringement" under § 284. *Seagate* requires "a two-pronged analysis" for willful infringement "entailing separate objective and subjective inquir-

ies." *Powell* v. *Home Depot U.S.A., Inc.*, 663 F.3d 1221, 1236 (Fed. Cir. 2011). Consistent with *Safeco*, the first prong "requires at least a showing of objective recklessness." *Seagate*, 497 F.3d at 1371. That is, the infringer must have "acted despite an *objectively high likelihood* that its actions constituted infringement of a valid patent." *Ibid.* (emphasis added) (citing *Safeco*, 551 U.S. at 69). The analysis "entails an objective assessment of potential defenses based on the risk presented by the patent." *Bard Peripheral Vascular, Inc.* v. *W.L. Gore & Assocs., Inc.*, 682 F.3d 1003, 1006 (Fed. Cir. 2012). "Those defenses may include," among other things, "questions of infringement" (whether the patent's claims read on the accused product) and the patent's "validity" (*e.g.*, whether it is anticipated or obvious). *Ibid.* Where the accused infringer can present "'a reasonable defense to a charge of infringement,' the objective prong" of the willful infringement analysis "tends not to be met." *Powell*, 663 F.3d at 1236 (quoting *Spine Sols., Inc.* v. *Medtronic Sofamor Danek USA, Inc.*, 620 F.3d 1305, 1319 (Fed. Cir. 2010)).

Consonant with the goal of judicial efficiency, the Federal Circuit treats that objective prong of willful infringement as a "threshold" inquiry. *Seagate*, 497 F.3d at 1371. If the defendant's defenses are objectively reasonable, the court never reaches the second prong, which concerns the defendant's subjective beliefs. See, *e.g.*, *Powell*, 663 F.3d at 1236; *Uniloc USA, Inc.* v. *Microsoft Corp.*, 632 F.3d 1292, 1311 (Fed. Cir. 2011).

That conforms with *Safeco*, which rejected efforts to overcome the standard of *objective* reasonableness with evidence of subjective belief. Where the defendant's conduct is noninfringing under a reasonable construction, the requisite "objectively high" risk of infringement does

not exist. See pp. 13-15, *supra*. No amount of speculation about the defendant's mental state can convert an objectively reasonable risk into an unreasonably high one. *Safeco*, 551 U.S. at 70 n.20.

Petitioner and the government both argue that *Seagate* erred in holding that *Safeco*'s "objective recklessness" standard "is always a prerequisite to enhanced damages." U.S. Br. 27; see Pet. Br. 23 ("*Seagate* wrongly imported that objective recklessness test into patent law as the sole prerequisite to enhancing damages * * *."). The Federal Circuit's approach of limiting enhanced damages to cases of willful infringement, they assert, improperly "insulates a substantial subset of the 'wanton and malicious'" misconduct "that enhanced patent damages have traditionally served to punish and deter." U.S. Br. 26; see pp. 10-12, *supra*.

Those arguments, however, are addressed solely to whether *willfulness* should be the *exclusive* standard for enhanced-damages awards. We agree that it should not. But neither petitioner nor the government seriously disputes that, where a claim for enhanced damages *is* based solely on an assertion of "willful"—*i.e.*, knowing or reckless—infringement, *Safeco* requires the plaintiff to show that the defendant "acted despite an *objectively high likelihood* that its actions constituted infringement of a valid patent." *Seagate*, 497 F.3d at 1371 (emphasis added). Nor could they. *Safeco*'s holding that "willfulness" requires a showing of "objective[ ] unreasonable-[ness]," 551 U.S. at 70, was based on "the common law understanding" of that term, *id.* at 69. There is no reason why a different definition of "willful" should apply to willful infringement here. See pp. 7-10, *supra*. Indeed, adopting a different, patent-law-specific understanding of a common-law concept such as "willfulness"

would defy this Court's guidance. Cf. *eBay Inc.* v. *MercExchange, LLC*, 547 U.S. 388, 391 (2006).

C. This Court Should Reject Efforts To Convert *Safeco*'s Objective Standard Into an Inquiry Into Past Subjective Beliefs

Petitioner and the government argue that, "[e]ven if the objective reasonableness of a defendant's conduct could preclude an enhanced-damages award under Section 284, the reasonableness analysis should turn on the facts and circumstances known to the defendant *at the time of the infringing conduct*." U.S. Br. 28-29; Pet. Br. 24. Thus, they assert, it cannot take into account all defenses asserted "*at trial*." U.S. Br. 31. That makes no sense in principle. It seeks to convert an objective inquiry into a subjective one. And it is unworkable in practice.

The government asserts that *Safeco* was decided on the "understanding" that the defendant "had *actually relied* on a reasonable (though erroneous) interpretation of the FCRA." U.S. Br. 30. But this Court has rejected that theory, which would require defendants to show *both subjective* good faith—actual reliance on a particular interpretation—*and objective* reasonableness. See *Cheek* v. *United States*, 498 U.S. 192, 201, 203 (1991). As *Cheek* explained, a defendant can negate a showing of willfulness by demonstrating that he *subjectively* believed his conduct was lawful, even if that belief was *not* objectively reasonable. *Id.* at 203. Under *Cheek*, subjective belief and objective reasonableness are alternative means of disproving willfulness; one is for the finder of fact, and the other is an issue of law for the court. *Ibid.*

Safeco never contradicts that conclusion. Nowhere did it hold that objective reasonableness can be evaluated only by reference to positions on which the defendant

"actually relied" prior to trial. To the contrary, the Court flatly stated that a company "*does not act in reckless disregard* of [the FCRA] unless the action is * * * a violation *under a reasonable reading of the statute's terms*." 551 U.S. at 69 (emphasis added); see *id.* at 69-70 (defendant's "reading has a foundation in the statutory text"). And the Court likewise considered the defendant's post-hoc "*justification*" for its position, presented in the course of litigation, which was "sufficiently convincing * * * to have persuaded *the District Court* to adopt it and rule in [defendant's] favor." *Id.* at 70 (emphasis added). The Court plainly considered the strength of the defenses asserted at trial to be relevant to the "objective reasonableness" of the defendant's position.

The government's approach is, in any event, at war with the concepts of willfulness and recklessness. *Safeco* explains that recklessness requires an "objective" assessment of whether there was "an unjustifiably high risk" of a violation. 551 U.S. at 68 (quotation marks omitted). An individual's *subjective* beliefs about an issue at some specific point in time have no bearing on the *objective* likelihood of a condition existing. A person may subjectively believe that the earth is flat, but that does not make it any less likely that, viewed from an objective standpoint, the world is round. Likewise here: The claim that a defendant supposedly was unaware of its strongest arguments does not alter the *objective* likelihood that its conduct is lawful. The government's reliance on "knowledge" as an alternative suffers from the same defect.[2]

---

[2] The United States urges that, under *Safeco*, a plaintiff "may prove a willful violation by establishing *either* the defendant's objective recklessness or its *knowing* misconduct." U.S. Br. 28. But actual knowledge is a standard that "surpasses recklessness and negli-

The government's request that courts focus on the defendant's state of mind at a certain point in time is, at bottom, a request that the Court *abandon* the objective test. Under the government's view, courts would not examine the objective reasonableness of the defendant's conduct. They would consider what the defendant *believed* its defenses were in the past. But such inquiries are both perilous and irrelevant. It is often easy to find subjective assertions in scattered emails (often from people who have no idea how to read a patent or how to determine invalidity). Or oral discussions and hinted conclusions may go unrecognized. But that has no bearing on whether the *likelihood* of infringement was unacceptably high on an *objective* basis.

The government cites cases from other contexts, such as determining whether an officer used excessive force or conducted a reasonable search, as supporting its position that determining whether actions "were objectively reasonable" requires a "time-of-action analysis." U.S. Br. 29. But those cases are not analogous. In each instance, the ultimate question of "objective reasonable-

---

gence." *Global-Tech Appliances, Inc.* v. *SEB S.A.*, 131 S. Ct. 2060, 2070 (2011). A party cannot logically be said to have "*known*" that it was infringing a valid patent where the plaintiff cannot show recklessness—*i.e.*, that there was "'an unjustifiably high risk of harm that is either known or so obvious that it should be known.'" *Safeco*, 551 U.S. at 68 (quoting *Farmer*, 511 U.S. at 836) (emphasis added). The government conflates *knowledge* (subjective awareness of a *certainty*) with subjective *belief*. It simply makes no sense to say someone *knew* a fact to be true where, as an objective matter, anyone with perfect knowledge of available information would admit considerable uncertainty. As this Court explained in *Safeco*, "it would defy history and current thinking to treat a defendant who merely adopts one" of several reasonable "interpretation[s] as a *knowing or reckless* violator." *Id.* at 70 n.20 (emphasis added).

ness" is directed to the defendant's *conduct itself*. Whether conduct is reasonable under the circumstances can be assessed only in light of the facts the person "knew at the time, not with the 20/20 vision of hindsight." *Kingsley* v. *Hendrickson*, 135 S. Ct. 2466, 2473 (2015); see also *Rompilla* v. *Beard*, 545 U.S. 374, 381 (2005).

But determining whether a defendant's *infringement* is willful—*i.e.*, whether there is a willful *violation*—requires *interpreting and applying legal standards*. The question in that context is whether, based on those standards, it would be *objectively reasonable to believe* the conduct lawful. Very often, that analysis turns not on the facts but on legal questions, such as the proper construction of the patent itself. *Markman* v. *Westview Instruments, Inc.*, 517 U.S. 370, 387 (1996). Where the defendant's conduct is not infringing under a reasonable construction of the patent claims, his conduct is objectively reasonable—regardless of subjective intent. Asking what facts the defendant knew, and when, has nothing to do with an "objective" assessment of whether there was "an unjustifiably high risk" that a certain product or conduct infringes a patent, or whether a patent will be found valid. *Safeco*, 551 U.S. at 68 (quotation marks omitted).

It is telling that neither petitioner nor the government explains how a "time-of-action analysis" would apply in determining whether patent infringement was "willful." As a practical matter, if objective reasonableness turned solely on defenses that companies documented at the time of infringement, companies could protect themselves against later charges of willfulness only by obtaining an opinion of counsel with respect to every patent that comes to their attention. But such opinions are expensive—the median cost for an opinion on infringe-

ment and validity is $15,000. American Intellectual Property Law Ass'n, *Report of the Economic Survey 2013*, at 27 (July 2013). It simply is not feasible to obtain an opinion every time an employee views a patent.

In the Leahy-Smith America Invents Act, Congress recognized that failure to obtain an opinion of counsel should not open a defendant to charges of enhanced damages. It provided that "failure * * * to obtain the advice of counsel," or failure to present that advice as evidence, "may not be used" to prove that infringement was "willful[]." 35 U.S.C. §298. Petitioner's and the government's standard undermines that congressional intent. Under their standard, even if the absence of an opinion cannot be used *against* an accused infringer per §298, a defendant still would need an opinion to *substantiate* an objective-reasonableness defense as of the time of infringement.

Nor is it clear what "time" would govern a time-of-action analysis. It is no exaggeration to say that products change daily in high-tech industries. Would a new analysis and opinion be required with every change? Or what if another party challenges the relevant patent before the PTO in an *inter partes* review? Would the fact that the PTO grants review itself change the analysis? Perhaps the PTO issues a claim construction opinion concerning the patent, but the Federal Circuit later reverses it, all during the alleged period of infringement—would the likelihood of infringement be evaluated differently for purposes of enhanced damages at each potential inflection point? A time-of-action analysis simply is not workable. Companies need to focus on their job—innovation—and not be required to monitor every development that could affect the possibility of infringement. For that reason, too, the Court should reject a "time-of-

action analysis" for assessing objective reasonableness in the context of willful patent infringement.

D. Adherence to *Safeco*'s Objective-Unreasonableness Threshold Is Critical to the Proper Functioning of the Patent System

Because most claims for enhanced damages are based on allegations of willfulness, *Safeco*'s and *Seagate*'s objective-unreasonableness threshold serves a critical role. It protects the patent system's purpose of promoting knowledge and innovation. It stems the tide of willfulness claims. And it mitigates the effects of forum shopping. Too loose a standard, by contrast, undermines incentives to utilize the patent system.

1. *An Objective-Unreasonableness Threshold Promotes the Patent System's Purposes—To Disseminate Knowledge and Spur Innovation*

The Patent Clause of the Constitution gives Congress the power "[t]o promote the Progress of Science and useful Arts, by securing for limited Times to Authors and Inventors the exclusive Right to their respective Writings and Discoveries." U.S. Const. art. I, §8, cl. 8. Accordingly, the patent system reflects "a carefully crafted bargain": The patentee is granted "an exclusive monopoly for a limited period of time" in exchange for "the public disclosure" of a new invention. *Pfaff* v. *Wells Elecs., Inc.*, 525 U.S. 55, 63 (1998). That disclosure must describe the advance in sufficient detail to enable others to practice it. 35 U.S.C. § 112. The patent itself thus fosters the "dissemination of information concerning discoveries and inventions" to the public. *Brenner* v. *Manson*, 383 U.S. 519, 533 (1966). Those seeking to understand the patented invention do not need to reinvent it, reverse-engineer it, or try to reconstruct it

using disparate sources of information, such as academic articles; they need only read the patent.

That bargained-for disclosure, however, does not merely publicize the invention. It also "promot[es]" further "innovation," *Bonito Boats, Inc.* v. *Thunder Craft Boats, Inc.*, 489 U.S. 141, 146, 150-151 (1989), by allowing other inventors to build on the work of patentees who have gone before them, see *Scott Paper Co.* v. *Marcalus Mfg. Co.*, 326 U.S. 249, 255 (1945). Such "imitation and refinement through imitation are both necessary to the invention itself and the very lifeblood of a competitive economy." *Bonito Boats*, 489 U.S. at 146.

A patent's disclosures may also serve as a catalyst for competitors to develop new—and potentially faster, more accurate, and cheaper—ways of achieving the same result. That incentive to "'design around' a competitor's * * * patented" invention is another significant "benefit of [our] patent system." *State Indus., Inc.* v. *A.O. Smith Corp.*, 751 F.2d 1226, 1236 (Fed. Cir. 1985); see also *Slimfold Mfg. Co.* v. *Kinkead Indus., Inc.*, 932 F.2d 1453, 1457 (Fed. Cir. 1991). The design-around process—"keeping track of a competitor's products" as disclosed in their patents "and designing new and possibly better or cheaper functional equivalents"—itself "bring[s] a steady flow of innovations to the marketplace." *A.O. Smith*, 751 F.2d at 1235-1236.

The threat of enhanced damages based on "willful" infringement undermines that dynamic. In some industries, it leads "researchers and companies" to "ignore patents." Mark A. Lemley, *Ignoring Patents*, 2008 Mich. St. L. Rev. 19, 21-22 (2008). "Companies and lawyers tell engineers not to read patents in starting their research, lest their knowledge of the patent disadvantage the company by making it a willful infringer." *Ibid.* Such ig-

norance of the innovations disclosed in patents can lead to "wasteful duplication" of research efforts, "delay[s]" in developing "follow-on innovation[s]," and less competition overall. FTC, *To Promote Innovation: The Proper Balance of Competition and Patent Law and Policy* 16-17 (Oct. 2003).

Sadly, in today's environment, the advice to ignore the knowledge disclosed in patents is not necessarily ill-founded. Yahoo's experience has shown that being immersed in the patents on file with the PTO increases the risk that, in any suit for patent infringement, the patentee will claim enhanced damages under a theory of "knowing" or "willful" infringement. In several recent cases, patentees have asserted claims for enhanced damages against Yahoo because Yahoo cited them *as prior art* in Yahoo's *own patent applications*.

That result is upside down. Disclosure of the invention to the public is the bargain the patentee makes in exchange for its limited monopoly. *Pfaff*, 525 U.S. at 63. It is not a trap to extract enhanced damages from those who actually read the patent. Whatever standard the Court ultimately adopts, it should make clear that the mere fact that a defendant has used the patent system for one of its primary purposes—research—cannot by itself justify enhanced damages. That intended use of the patent system should be protected. Use of the patent system as intended should be no basis for finding willfulness.

The objective-reasonableness standard of *Safeco* serves that same interest. A purely subjective standard for willfulness destroys the utility of the patent system as a storehouse of knowledge. It would mean that, whenever a researcher, engineer, or other employee knew about the patent, the plaintiff could claim willful infringe-

ment, urging that—no matter how meritorious the defendant's position now—the defendant did not have that belief before litigation. And courts often "consider[ ]" subjective intent a "question of fact * * * inherently requiring resolution by a jury." *Harlow* v. *Fitzgerald*, 457 U.S. 800, 816 (1982).

A subjective standard thus would make claims for enhanced damages difficult to resolve without an expensive and unpredictable trial. Litigation costs and judgments in patent cases already run into seven figures, and penalties for willful infringement can add millions more to a judgment. One study found that the average award between 2000 and 2008 was $17.8 million. J. Shawn McGrath & Kathleen M. Kedrowski, *Damages Trends in Patent and Lanham Act Cases* 2, http://goo.gl/ugt5TC. Many companies simply cannot tolerate the risks and costs of litigation, a fact that gives plaintiffs (including non-practicing entities) a tool for extracting nuisance settlements even in insubstantial cases. See Richard B. Racine & Michele C. Bosch, *Willful Infringement: A Real Concern*, 3 Fed. Cir. B.J. 409, 409 (1993).

Subjective belief, moreover, is "easy to allege and hard to disprove." *Crawford-El* v. *Britton*, 523 U.S. 574, 585 (1998) (quotation marks omitted). That places a company that uses the patent system for research in a bind: If sued, how can the company show that, even if one of its employees knew about a patent, it subjectively believed the patent was not valid or the company was not infringing? One of the few ways for a defendant to substantiate such an argument is to obtain an opinion from counsel. See *Seagate*, 497 F.3d at 1369. As explained above, however, it simply is not feasible for companies to obtain an opinion every time an employee views a

patent—a fact Congress recognized in the AIA. See p. 22, *supra*.

Seagate's objective-unreasonableness standard helps mitigate those problems. Companies can mine the knowledge disclosed in patents—and make determinations about how to utilize or build on that knowledge—with some confidence that, if they are later sued, their conduct will not be judged on speculation regarding what their employees might have thought. Rather, a company's decision to engage in certain conduct notwithstanding a patent will be judged in view of objective indicia of the patent's validity and the likelihood that the company's conduct infringed it. See pp. 15-17, *supra*.

As this Court has explained, moreover, objective standards often may be decided as a matter of law, allowing "resolution of many insubstantial claims on summary judgment." *Harlow*, 457 U.S. at 818. Thus, under current law, courts can determine the "objective" component of the willfulness standard as a matter of law, *Bard*, 682 F.3d at 1006-1007, allowing judges to grant summary judgment on enhanced damages.[3] That helps prevent the costs and uncertainty of trials on subjective mental beliefs from becoming leverage for the extraction of settlements on weak claims.

---

[3] See, *e.g.*, *Advanced Fiber Techs. (AFT) Tr.* v. *J&L Fiber Servs., Inc.*, 674 F.3d 1365, 1377-1378 (Fed. Cir. 2012); *Tarkus Imaging, Inc.* v. *Adobe Sys., Inc.*, 867 F. Supp. 2d 534, 537 (D. Del. 2012); *Plumley* v. *Mockett*, 836 F. Supp. 2d 1053, 1075-1076 (C.D. Cal. 2010).

2. *An Objective-Unreasonableness Threshold Helps To Stem the Flood of Enhanced-Damages Awards*

As discussed above, Congress enacted the 1952 Patent Act on the century-old understanding that enhanced damages should be reserved for truly egregious conduct. See pp. 9-10, *supra*. Today, however, plaintiffs "routinely" seek enhanced damages. Christopher B. Seaman, *Willful Patent Infringement and Enhanced Damages After* In re Seagate*: An Empirical Study*, 97 Iowa L. Rev. 417, 442-443 (2012). Scholars estimate that plaintiffs seek enhanced damages 80% or 90% of the time. See *id.* at 442-443 & nn.165-166. Alleging willfulness is low risk (few arguments are sanctionable) and high reward (a plaintiff can triple a judgment). *Id.* at 443. Plaintiffs thus pursue enhanced damages even when they have "a small probability of winning." *Ibid.* (quotation marks omitted).

Yahoo's experience supports those conclusions. Since January 1, 2007, Yahoo has been sued for patent infringement 88 times. Plaintiffs pleaded willfulness in the complaint 40 times, and reserved the right to do so in another 10—in other words, enhanced damages were raised in the pleadings 57% of the time. That suggests plaintiffs assert enhanced-damages claims as a matter of course. Additional data bolsters that conclusion. Only about 44% of the time do plaintiffs bother to contact Yahoo to discuss their claims before suing for enhanced damages. In those cases, Yahoo typically directs its lawyers to investigate allegations of infringement and provide a substantive response on non-infringement and validity (assuming the plaintiff provides sufficient time for response before filing suit). Yet such investigations only seem to *increase* Yahoo's exposure to enhanced-

damages claims: Pre-filing contact leads to allegations of willful infringement about 72% of the time. The fact that good-faith investigations prompt, rather than deter, claims for enhanced damages shows just how pervasive such claims are.

That experience suggests that, even under *Seagate*, enhanced damages are sought far too often. Before the Federal Circuit recognized that willfulness required objective reasonableness, however, the situation was worse. Pre-*Seagate*, district courts regularly awarded enhanced damages in cases that went to trial. Courts awarded enhanced damages 81.4% of the time that a jury recommended them. Seaman, *supra*, at 466. After *Seagate*, that figure fell significantly, to 54.9%. *Ibid.* Those statistics show that, in many cases where juries find infringement to have been "willful," courts nevertheless determine the defendants had reasonable defenses. An objective threshold helps cull weak claims and keep enhanced-damages awards the exception rather than the rule. Cf. *Harlow*, 457 U.S. at 815-816.

3. *An Objective-Unreasonableness Threshold Helps To Mitigate Forum Shopping*

Forum shopping is pervasive in patent litigation, in part because juries and courts in certain districts are far more likely to award enhanced damages than in others. In patent infringement suits, non-practicing entities (*e.g.*, patent trolls) frequently choose a forum that has nothing to do with the parties themselves, but has proved more favorable to plaintiffs in litigation—the Eastern District of Texas. See PricewaterhouseCoopers, *2015 Patent Litigation Study* 15-16 (May 2015). Yahoo has been subject to that forum shopping all too often—of the 88 patent cases filed against Yahoo in the last 8 years, 40 were filed by non-practicing entities in the Eastern Dis-

trict of Texas. By contrast, only three were filed in the Northern District of California, where Yahoo has its principal place of business.

The Eastern District of Texas is attractive to patent trolls for several reasons. Plaintiffs prevail 55% of the time compared to the national average of 33%, and, as relevant here, they have found it far easier to obtain enhanced damages in that district. Pricewaterhouse-Coopers, *supra*, at 15; Yan Leychkis, *Of Fire Ants and Claim Construction: An Empirical Study of the Meteoric Rise of the Eastern District of Texas as a Preeminent Forum for Patent Litigation*, 9 Yale J.L. & Tech. 193, 222, 232 (2007). According to one study, juries in the Eastern District of Texas found infringement to be willful 52.3% of the time, compared to 35.7% of the time for New Jersey juries and 27.3% for Minnesota juries. Seaman, *supra*, at 450.

The "objective reasonableness" standard for willful-infringement claims helps dampen the incentives for forum shopping. Whether a defendant's construction is objectively reasonable—and thus whether there was objectively an unreasonably high likelihood of infringement—is a legal question resolved de novo by courts. *Cheek*, 498 U.S. at 203; see also *Bard*, 682 F.3d at 1007. "Independent review" allows the appellate court more ability to "maintain control of * * * the legal principles" governing enhanced damages and to ensure their consistent application nationwide. *Ornelas* v. *United States*, 517 U.S. 690, 697 (1996).

As it stands, even under *Seagate*, non-practicing entities are roughly twice as likely to sue Yahoo in the Eastern District of Texas than to initiate a responsible pre-filing discussion of the merits. Moving to a purely subjective standard, however, would only encourage

more entities to run straight to their forum of choice, using the threat of treble damages—based on the jury's speculation about what the defendant's employees might have believed—as leverage for extracting a large settlement.

III. The Federal Circuit Correctly Denied Enhanced Damages Here

The Federal Circuit reached the correct outcome in this case. Petitioner did not produce evidence that respondent acted with the type of bad faith, "wanton or malicious" misconduct that could itself warrant enhanced damages. *Seymour*, 57 U.S. (16 How.) at 489. And the court correctly held that enhanced damages were not available under a willful (*i.e.*, reckless or knowing) infringement theory, as respondent had objectively reasonable defenses to the claim of patent infringement.

1. Petitioner Halo holds patents for "surface-mount packages" for transformers, a component on electronic circuit boards. Pet. App. 4a. The transformers produce heat and expand, which can cause their packaging to crack. *Id.* at 41a-42a. Halo's patented designs address that problem by leaving the bottom of the packaging open to permit expansion. *Id.* at 4a-5a, 43a. This is referred to as "open construction" packaging. *Id.* at 43a.

In 1998—the same year that a Pulse engineer learned of Halo's patents—Pulse introduced a surface-mount transformer with open-construction packaging. Pet App. 7a, 43a. In 2002, Halo sent Pulse two offers to negotiate a licensing agreement, but did not accuse Pulse of infringement. *Id.* at 7a. Pulse's president contacted a Pulse engineer, who reviewed Halo's patents and concluded that they were invalid in view of prior Pulse products. *Ibid.* A Pulse witness later testified, however,

that no one "made a conscious decision" whether Pulse could continue selling its products. *Ibid.*

In 2007, Halo sued Pulse for patent infringement. Pulse defended itself, in part, on the ground that the patents were invalid for obviousness. Pet. App. 7a. A jury rejected that argument and found the patents valid. *Id.* at 8a. The jury found that Pulse had infringed the patents, and awarded Halo $1.5 million in actual damages. *Ibid.* The jury also found it "highly probable" Pulse had infringed willfully. *Ibid.* But the district court declined to award enhanced damages under the *Seagate* standard. It explained that, while Pulse's obviousness defense had failed, it was "not objectively baseless." *Id.* at 64a. Pulse thus "did not act in the face of an objectively high likelihood that [it] was infringing." *Ibid.* The Federal Circuit agreed, and affirmed. *Id.* at 19a-22a.[4]

2. Halo argues that Pulse's "culpable conduct" justifies enhanced damages. Pet. Br. 29-30; see also *id.* at 4-5. The evidence it cites, however, does not meet the criteria for the sort of "wanton or malicious" misconduct that would traditionally support enhanced damages.

Halo's primary argument is that Pulse copied Halo's patented invention. Pet. Br. 29. But all Halo has shown is that Pulse began producing an open-construction package the same year that a "Pulse engineer saw" a Halo patent. *Id.* at 4. Halo does not say what that

---

[4] Under current Federal Circuit precedent, willfulness is absent when the defenses—whether noninfringement or invalidity—are objectively reasonable. See *Powell*, 663 F.3d at 1236. No party to this proceeding has questioned consideration of invalidity. That makes sense. If it is objectively reasonable to believe that selling one's product is lawful—whether because the asserted patent is invalid, or simply does not cover the product—the continued sale of that product is not reckless, or willful, infringement.

engineer's role was within Pulse, or who else within Pulse the engineer disclosed the patent to, if anyone. And reviewing patents is innocent conduct—indeed, precisely the sort of conduct the patent laws were designed to encourage. Halo cites no evidence that anyone within Pulse "maliciously" decided for the company to copy Halo's products and begin producing infringing products to injure Halo. Such purely inferential evidence on copying is not, itself, evidence of the type of bad faith conduct that can sustain an enhanced damages award.[5]

Halo also complains that Pulse ignored two letters in which Halo offered to license its patents. Pet. Br. 29. But those letters were merely invitations to conduct business; they did not allege infringement. Pet. App. 20a. And, in any event, the record shows that, upon receiving those letters, Pulse asked an engineer to review the patents, and he "concluded that the patents were invalid in view of prior Pulse products." *Id.* at 21a. While Halo calls that review "cursory," it never says what, precisely, it believes Halo was required to do. Pet. Br. 29. Tellingly, Halo does not go so far as to urge that Pulse was required to obtain an opinion of counsel to insulate itself against claims of bad faith. *Id.* at 29-30. Pulse's mere failure to respond to a licensing offer hardly shows wanton or malicious intent to injure Halo.

Ultimately, Halo's arguments boil down to the fact that Pulse "admitted that no one in the company made a conscious decision that Pulse could properly sell its

---

[5] Intentional copying, moreover, is "not illegal" so long as a "competitor's product * * * is not protected by the patent laws." *Milgo Elec. Corp.* v. *United Bus. Commc'ns, Inc.*, 623 F.2d 645, 666 (10th Cir. 1980); see also *Sears, Roebuck & Co.* v. *Stiffel Co.*, 376 U.S. 225, 231-232 (1964). Hence, copying will not be conclusive evidence of bad faith where there are questions regarding the patent's validity.

infringing products." Pet. Br. 30. At worst, that shows Pulse acted with "inadvertence" or failed to take proper precautions. *Restatement (Second) of Torts* § 500 cmt. g (1965). That is not the type of egregious misconduct that can justify enhanced damages.[6]

3. That leaves Halo's claims of willful infringement. But the Federal Circuit concluded that Halo had objectively reasonable defenses. And Halo does not dispute that Pulse had an objectively reasonable obviousness defense, which precludes a willfulness finding under *Seagate*.[7] In other words, Pulse did not act despite "an unjustifiably high risk" of infringing a valid patent. *Safeco*, 551 U.S. at 68 (quotation marks omitted). Enhanced damages were unwarranted.

CONCLUSION

The judgment of the court of appeals should be affirmed.

---

[6] Halo also urges that "Pulse used its much-greater resources to take advantage of a small competitor, betting on the fact that Halo would not be able to defend its rights." Pet. Br. 30; see *id.* at 4-5. But that is pure attorney argument—Halo cites no evidence that Pulse infringed *because* it thought it could do so with impunity.

[7] In the district court, Halo argued that "Pulse's actions demonstrate objective recklessness." Pet. App. 65a. But as the district court noted, those arguments were directed only "to the subjective element of infringement," and did "not undermine Pulse's reasonable obviousness defense." *Ibid.*

Respectfully submitted.

KEVIN T. KRAMER
Deputy General Counsel – Intellectual Property
YAHOO! INC.
701 First Ave.
Sunnyvale, CA 94089
Counsel for Yahoo! Inc.

JOHN W. SCHMIEDING
Vice President, General Counsel
ARTHREX, INC.
1370 Creekside Blvd.
Naples, FL 34108
Counsel for Arthrex, Inc.

JEFFREY A. LAMKEN
Counsel of Record
MICHAEL G. PATTILLO, JR.
JAMES A. BARTA
MOLOLAMKEN LLP
The Watergate, Suite 660
600 New Hampshire Ave., NW
Washington, D.C. 20037
(202) 556-2000
jlamken@mololamken.com

TUONGVY LE
MOLOLAMKEN LLP
540 Madison Ave.
New York, NY 10022
Counsel for Amici Curiae

JANUARY 2016